e to the
AIR®
tal Catalog!

NAVIGATE
Use the arrows to turn the page. On mobile devices just swipe left or right.

SEARCH
Search the entire catalog by keyword or item number.

NOTES
Leave notes directly in the catalog.

ZOOM
Zoom in and out.



TAKE ACTION
You can now click on a highlighted EXAIR model number, hyperlinks, videos and etcetera.

HOME OF INTELLIGENT COMPRESSED AIR® Products

e to the
AIR®
tal Catalog!

NAVIGATE

Use the arrows to turn the page. On mobile devices just swipe left or right

SEARCH

Search the entire catalog by keyword or item number

BOOKMARK/NOTES

Bookmark your favorite pages and leave notes directly in the catalog

ZOOM

Zoom in and out

HOME OF INTELLIGENT COMPRESSED AIR® Products

115 Safety Air Guns



Safety air guns use engineered air nozzles for high performance

- Chip Shields....116
- VariBlast® Precision Safety Air Guns....117
- VariBlast® Compact Safety Air Guns....118
- Soft Grip Safety Air Guns....120
- Soft Grip Super Air Scraper....123
- Heavy Duty Safety Air Guns....124
- Back Blow Safety Air Guns....125
- TurboBlast® Safety Air Guns....126
- Super Blast Safety Air Guns....128

130 Gen4® Static Eliminators

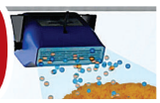

Eliminate static electricity, dust and shock hazard

- Gen4® Super Ion Air Knife....132
- Static Meter....134
- Gen4® Standard Ion Air Knife....138
- Gen4® Ionizing Bars....140
- Gen4® Super Ion Air Wipes....142
- Gen4® Ion Air Cannon....144
- Gen4® Ion Air Gun....146
- Gen4® Ion Air Jet/Gen4 Stay Set Ion Air Jet....148
- Gen4® Ionizing Point....150
- Gen4® Power Supplies....151
- Intellistat® Ion Air Gun....152
- Intellistat® Ion Air Nozzle....154
- Varistat Bench Ionizer....156

158 E-Vac® Vacuum Generators



Vacuums for lifting, clamping, mounting and placement

- How to Build an E-Vac System....159
- In-Line....160
- Adjustable....163
- Vacuum Cups....165

169 Air Operated Conveyors



Convey parts, materials and waste - with no moving parts

- Line Vac....169
- Threaded Line Vac....175
- Heavy Duty Line Vac....178
- Sanitary Flange Line Vac....180
- Light Duty Line Vac....182

184 Industrial Housekeeping



Reliable vacuums for chip removal, liquid transfer and cleaning

- EasySwitch® Wet-Dry Vac....185
- Reversible Drum Vac....187
- High Lift Reversible Drum Vac....189
- Chip Trapper....191
- High Lift Chip Trapper....193
- Chip Vac....195
- Heavy Duty Dry Vac....197
- Heavy Duty HEPA Vac....199
- Vac-u-Gun....201

203 Vortex Tubes & Spot Cooling



Cold air for industrial spot cooling problems

- Vortex Tubes....203
- Adjustable Spot Cooler....211
- Mini Cooler....214

215 Cold Gun Aircoolant Systems



Cool machining operations with clean, cold air

219 Cabinet Cooler® Systems



Cool and purge NEMA 12, 4 and 4X electrical control panels

- How it Works....220
- Selecting the Right Model....220
- Special Cabinet Coolers....221
- Calculating Heat Load....223
- Cabinet Cooler Sizing Guide....224
- NEMA 12 Models....226
- NEMA 4 Models....227
- NEMA 4X Models....228
- Cabinet Cooler System Accessories....229
- Hazardous Location Cabinet Coolers....230
- ATEX Cabinet Coolers....232

234 Accessories



Mufflers, filters, regulators, valves, swivel fittings and more

- Filters....234
- Regulators....235
- Silencing Mufflers....236
- Valves, Swivels, Thermostats....238
- Magnetic Bases, Stay Sets, Hoses....239
- Air Hoses....239
- Fittings....240
- Receiver Tank....240



Catalog item orders received before 2 pm EDT/EST are generally shipped from Cincinnati, Ohio on the same day. You can expect delivery within 1-4 days depending on your location.

Terms and Conditions (U.S. and Canada Only)

Terms: Net 30 days upon credit approval, Visa, MasterCard, Discover and American Express.

Cards

ICC (International Chamber of Commerce) INCOTERM 2020: EX WORKS (EXAIR, 11510 Goldcoast Dr., Cincinnati, Ohio 45249, USA.)

Delivery All cataloged products are shipped from stock, via U.P.S. within 24 hours after receipt of order. Priority shipment is available upon request.

Ordering:
Call 1-800-903-9247 or +1-513-671-3322 Worldwide 7:00 a.m. to 4:00 p.m. ET (Mon. - Fri.)
Fax toll free 1-866-329-3924 or Worldwide +1-513-671-3363
E-mail: orders@exair.com Secure website: www.exair.com

Remit to address (payments only): EXAIR Location 00766, Cincinnati, Ohio 45264-0766

Tax: Sales and use tax, where applicable, are not included.

Technical Assistance: Please call our Application Engineering Department, 1-800-90-EXAIR (1-800-903-9247) e-mail at techelp@exair.com.

Warranty: 5 Year "Built To Last" Warranty against defects in workmanship and materials on all compressed air products*. Defective products must be returned freight prepaid for repair or replacement at our option. This warranty applies under conditions of normal use, but does not apply to defects that result from intentional damage, negligence, unreasonable use, wear or exposure.

*5 Year Warranty applies to compressed air products only. A 1 Year Warranty applies to all accessories and electrically powered products.

EXAIR's Unconditional Guarantee: Extends to all U.S. and Canadian customers and includes invoiced U.P.S. Ground Service shipping charges. Products returned after the 30 day guarantee period are subject to a 15% restocking charge. Products must be returned freight prepaid.

EXAIR unconditionally guarantees its cataloged products for 30 days.
If you are not satisfied **for any reason** within that time, you may return the product **for full credit with no restocking charge.**

Copyright Restrictions: The content of the EXAIR Catalog, including all photos, graphics, drawings and arrangements are proprietary to EXAIR LLC and are protected by the United States and international copyright and trademark laws. You are authorized to use the contents of the EXAIR Catalog for personal use or as it relates to your role as a current or prospective customer of EXAIR. The contents of this catalog may not be copied or modified for any type of publication or distribution without the prior written consent of EXAIR. The content of the EXAIR Catalog is the intellectual property solely of EXAIR with no rights transferred to other parties. No part of this catalog may be reproduced for any commercial purposes without the express authorization in writing by EXAIR.

Trademarks: "EXAIR.com", "EXAIR", "Cabinet Cooler", "E-Vac", "Intelligent Compressed Air", "VariBlast", "Gen4", "Intellistat", "EasySwitch", "TurboBlast", "Varistat" and "Compressed Air Intelligence" are registered trademarks of the EXAIR LLC. The EXAIR logo, product names, designs and descriptive phrases are trademarked by EXAIR. These trademarks may not be used without prior written permission of EXAIR.

EXAIRLogger, EFC, Digital Flowmeter, Hot Tap Digital Flowmeter, Digital Sound Level Meter, High Power Cold Gun, Super Air Knife, Standard Air Knife, Full-Flow Air Knife, Air Cannon, Super Air Amplifier, Adjustable Air Amplifier, Super Air Nozzle, Micro Air Nozzle, High Power Safety Air Nozzle, Stay Set Hose, Soft Grip Super Air Scraper, Super Air Scraper, Super Blast Safety Air Gun, Super Air Wipe, Heavy Duty Line Vac, Light Duty Line Vac, Sanitary Flange Line Vac, Threaded Line Vac, OmniStream, PowerStream, HollowStream, Standard Air Wipe, Super Ion Air Knife, Standard Ion Air Knife, Super Ion Air Wipe, Ion Air Cannon, Ion Air Gun, Ion Air Jet, Ionizing Point, Stay Set Ion Air Jet, Line Vac, Chip Vac, Heavy Duty Dry Vac, Heavy Duty HEPA Vac, Reversible Drum Vac, High Lift Reversible Drum Vac, Chip Trapper, High Lift Chip Trapper, Vac-u-Gun, Deep Hole Vac-u-Gun, Air Disk, Air Stik, Mini Cooler, Cold Gun Aircoolant System, and ETC are trademarks of EXAIR LLC.

EXAIR.com
11510 Goldcoast Dr.
Cincinnati, Ohio 45249-1621
Phone Number: (513) 671-3322
Fax Number: (513) 671-3363
E-mail: techelp@exair.com
Web Site: www.exair.com

Intelligent Compressed Air® products are identified throughout this catalog that can help your plant save tens of thousands of dollars over the course of a single year. *The Best Practices for Compressed Air Systems* manual published by the Compressed Air Challenge® recommends products like the Super Air Knife™, Super Air Amplifier™, and the family of Super Air Nozzles™ for energy conservation. Many of the products shown offer unique ways to solve common industrial problems using compressed air. Compressed Air Challenge is a registered trademark of Compressed Air Challenge, Inc.

EXAIR has partnered with Energy Star, a voluntary program of the U.S. Department of Energy and the Environmental Protection Agency. Energy Star offers energy efficient solutions to help save money while protecting the environment for future generations. EXAIR has implemented improved energy management practices and technologies throughout our facility, including energy efficient lighting, HVAC systems, and electronic thermostats. EXAIR's participation in this program underscores our commitment to conserving energy.

EXAIR products are subject to ongoing development. Specifications are subject to change without notice.
Some products in this catalog are covered by U.S. Patent #5402938, #8153001, #8268179, #D903,817, #10,779,698, #9156045 and 11,969,134, others may be U.S. Patent Pending.
EU Regd. Des. No.00770318-0001 and No. 009025463-0001 Ⓓ Mexico No.60723; Canada No.194141, UK Registered Design No. 6211314

Copyright ©2025 EXAIR LLC. All Rights Reserved.

EXAIR_Cat36_25_FROMINDESIGN.indb 4 12/20/24 3:45 PM



EXAIR's Intelligent Compressed Air® products vs your current installation

EXAIR's FREE Efficiency Lab service determines how much air and dollar savings you will achieve by installing one of our Intelligent Compressed Air products.

How does the Efficiency Lab work?

Our Efficiency Lab service begins with receiving a sample of the product(s) you currently use for your application. One of our qualified Application Engineers will use calibrated testing equipment to compare the performance of your existing product(s) to an EXAIR engineered solution. These tests will determine air consumption, noise levels and force. The test results will then be published in a comprehensive report, which includes a cost savings analysis, and be provided to you. For most applications, EXAIR products can help you improve application efficiency AND typically pay for themselves in a matter of weeks.

How can I get a product tested for free?

To participate in our FREE Efficiency Lab please contact one of our Application Engineers and get the details about sending us your product(s). You may reach an Application Engineer by phone at (800) 903-9247 or (513) 671-3322. You can send an email to *lab@exair.com* or visit our website and take advantage of our live help at www.exair.com.

Unable to send your product to EXAIR's Efficiency Lab?

If it is not possible to send us your product, we have a one page Product Efficiency Survey on our website (*exair.com/labdoc*) where you can provide us the details about a current inefficient compressed air application. Fill in the information and click submit. You will hear from one of our Application Engineers within three business days.

Okay, so what is the fine print?

This service is available to all customers in the U.S. and Canada only. Some restrictions may apply.

What about confidentiality?

Yes, EXAIR will keep the results of our Efficiency Lab test and report confidential unless given permission to share that information with others.

Products must be shipped to EXAIR prepaid. EXAIR will pay the return shipping via UPS Ground.

EXAIR_Cat36_25_FROMINDESIGN.indb 5 12/20/24 3:45 PM

Terms and Conditions (U.S. and Canada Only)

Terms: Net 30 days upon credit approval, Visa, MasterCard, Discover and American Express.

Cards

ICC (International Chamber of Commerce) INCOTERM 2010: EX WORKS (EXAIR, 11510 Goldcoast Dr., Cincinnati, Ohio 45249, USA.)

Delivery All cataloged products are shipped from stock, via U.P.S. within 24 hours after receipt of order. Priority shipment is available upon request.

Ordering: Call 1-800-903-9247 or +1-513-671-3322 Worldwide 7:00 a.m. to 4:00 p.m. ET (Mon. - Fri.)
Fax toll free 1-866-329-3924 or Worldwide +1-513-671-3363
E-mail: orders@exair.com Secure website: www.exair.com

Remit to address (payments only): EXAIR, L-4439, Columbus, Ohio 45260-4439

Tax: Sales and use tax, where applicable, are not included.

Technical Assistance: Please call our Application Engineering Department,
1-800-90-EXAIR (1-800-903-9247) e-mail at techelp@exair.com.

Built to Last 5yr. WARRANTY

Warranty: 5 Year "Built To Last" Warranty against defects in workmanship and materials on all compressed air products*. Defective products must be returned freight prepaid for repair or replacement at our option. This warranty applies under conditions of normal use, but does not apply to defects that result from intentional damage, negligence, unreasonable use, wear or exposure.

*5 Year Warranty applies to compressed air products only. A 1 Year Warranty applies to all accessories and electrically powered products.

EXAIR's Unconditional Guarantee: Extends to all U.S. and Canadian customers and includes invoiced U.P.S. Ground Service shipping charges. Products returned after the 30 day guarantee period are subject to a 15% restocking charge. Products must be returned freight prepaid.

EXAIR unconditionally guarantees its cataloged products for 30 days.
If you are not satisfied **for any reason** within that time, you may return the product **for full credit with no restocking charge.**

Copyright Restrictions: The content of the EXAIR Catalog, including all photos, graphics, drawings and arrangements are proprietary to EXAIR LLC and are protected by the United States and international copyright and trademark laws. You are authorized to use the contents of the EXAIR Catalog for personal use or as it relates to your role as a current or prospective customer of EXAIR. The contents of this catalog may not be copied or modified for any type of publication or distribution without the prior written consent of EXAIR. The content of the EXAIR Catalog is the intellectual property solely of EXAIR with no rights transferred to other parties. No part of this catalog may be reproduced for any commercial purposes without the express authorization in writing by EXAIR.

Trademarks: "EXAIR.com", "EXAIR", "Cabinet Cooler", "E-Vac", "Intelligent Compressed Air", "VariBlast", "Gen4", "Intellistat", "EasySwitch", "TurboBlast", "Varistat" and "Compressed Air Intelligence" are registered trademarks of the EXAIR LLC. The EXAIR logo, product names, designs and descriptive phrases are trademarked by EXAIR. These trademarks may not be used without prior written permission of EXAIR.

EXAIRLogger, EFC, Digital Flowmeter, Hot Tap Digital Flowmeter, Digital Sound Level Meter, High Power Cold Gun, Super Air Knife, Standard Air Knife, Full-Flow Air Knife, Air Cannon, Super Air Amplifier, Adjustable Air Amplifier, Super Air Nozzle, Micro Air Nozzle, High Power Safety Air Nozzle, Stay Set Hose, Soft Grip Super Air Scraper, Super Air Scraper, Super Blast Safety Air Gun, Super Air Wipe, Heavy Duty Line Vac, Light Duty Line Vac, Sanitary Flange Line Vac, Threaded Line Vac, FullStream, FloodStream, HollowStream, Standard Air Wipe, Super Ion Air Knife, Standard Ion Air Knife, Super Ion Air Wipe, Ion Air Cannon, Ion Air Gun, Ion Air Jet, Ionizing Point, Stay Set Ion Air Jet, Line Vac, Chip Vac, Heavy Duty Dry Vac, Heavy Duty HEPA Vac, Reversible Drum Vac, High Lift Reversible Drum Vac, Chip Trapper, High Lift Chip Trapper, Vac-u-Gun, Deep Hole Vac-u-Gun, Air Disk, Air Stik, Mini Cooler, Cold Gun Aircoolant System, and ETC are trademarks of EXAIR LLC.

EXAIR.com
11510 Goldcoast Dr.
Cincinnati, Ohio 45249-1621
Phone Number: (513) 671-3322
Fax Number: (513) 671-3363
E-mail: techelp@exair.com
Web Site: www.exair.com

An INTELLIGENT COMPRESSED AIR® Product

Intelligent Compressed Air® products are identified throughout this catalog that can help your plant save tens of thousands of dollars over the course of a single year. *The Best Practices for Compressed Air Systems* manual published by the Compressed Air Challenge® recommends products like the Super Air Knife™, Super Air Amplifier™, and the family of Super Air Nozzles™ for energy conservation. Many of the products shown offer unique ways to solve common industrial problems using compressed air. Compressed Air Challenge is a registered trademark of Compressed Air Challenge, Inc.

ENERGY STAR PARTNER

EXAIR has partnered with Energy Star, a voluntary program of the U.S. Department of Energy and the Environmental Protection Agency. Energy Star offers energy efficient solutions to help save money while protecting the environment for future generations. EXAIR has implemented improved energy management practices and technologies throughout our facility, including energy efficient lighting, HVAC systems, and electronic thermostats. EXAIR's participation in this program underscores our commitment to conserving energy.

EXAIR products are subject to ongoing development. Specifications are subject to change without notice.
Some products in this catalog are covered by U.S. Patent #5402938, #8153001, #8268179, #D903,817, #10,779,698 and #9156045, and others may be U.S. Patent Pending.
EU Regd. Des. No.00770318-0001 and No. 009025463-0001 Ⓓ Mexico No.60723; Canada No.194141, UK Registered Design No. 6211314
Copyright ©2025 EXAIR LLC. All Rights Reserved.

EFC™

An INTELLIGENT COMPRESSED AIR® Product





Electronic Flow Control minimizes compressed air use for blowoff, drying, cooling, conveying and static elimination operations!

Dramatically reduces compressed air costs by turning off the air when no part is present!

Plant Engineering PRODUCT of the YEAR 2006

What Is The EFC?

EXAIR's EFC is a user-friendly electronic flow control for compressed air that is designed to minimize compressed air use on blowoff, drying, cooling, conveying and static elimination operations. The EFC combines a photoelectric sensor with a timing control that limits compressed air use by turning it off when no part is present. The timing control permits easy tuning to the application requirements while providing flexibility in sensing distance. The EFC also has eight programmable on and off modes.

Why The EFC?

For most companies, the air compressor uses more electricity than any other type of equipment. One simple operation that uses compressed air can easily waste thousands of electricity dollars per year if not properly controlled. The EFC has been designed to improve efficiency by minimizing compressed air use and, as a result, reduce compressed air costs. It turns on the air only when a part is present and provides just enough air to complete a specific task or operation.

The EFC has an easy electrical connection for voltages from 100 to 240VAC, 50/60Hz making it suitable for applications throughout the world. The compact photoelectric sensor has a sensitivity adjustment and detects objects up to 3' (1m) away. The sensor has superior immunity to noise and inductive loads that are common to industrial environments and installs easily in tight spaces with the supplied mounting bracket. The control system provides flexibility with numerous valve operating modes and timing delays. The polycarbonate enclosure is suitable for use in a wide range of applications including those located in wet environments.

Applications

- Auto body blowoff
- Package cleaning
- Part drying after wash
- Dust removal
- Scrap removal
- Filling operations
- Cooling hot parts
- Neutralizing static
- Cleaning molded parts

Advantages

- Easy electrical hook-up; 100-240VAC, 50/60Hz
- NEMA 4/IP66 environments
- Compact sensor for mounting in tight spaces
- Eight function analog timer for on/off, pulsing and delay control
- Timer setting from 0.10 sec. to 120 hrs.
- Sensor withstands water and dust for accurate readings
- Sensor has superior immunity to noise and inductive loads Sensor has long distance sensing up to 3 feet (1m)



Photoelectric sensor withstands water and dust.

Electronic Flow Control	
Model #	**Description**
9055	EFC Electronic Flow Control, 40 SCFM (1,133 SLPM), solenoid valve, 1/4 NPT
9056	EFC Electronic Flow Control, 100 SCFM (2,832 SLPM), solenoid valve, 1/2 NPT
9057	EFC Electronic Flow Control, 200 SCFM (5,664 SLPM), solenoid valve, 3/4 NPT
9064	EFC Electronic Flow Control, 350 SCFM (9,911 SLPM), solenoid valve, 1 NPT

Models controlling two solenoid valves are available. Contact EXAIR for details.

EXAIR_Cat36_25_FROMINDESIGN.indb 7 12/20/24 3:45 PM

EFC

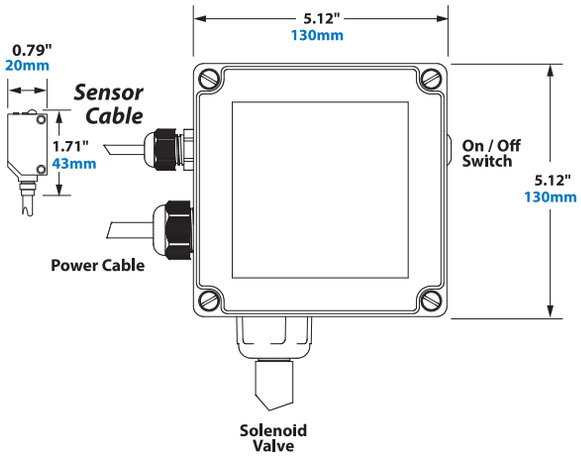

DOWNLOAD drawings at EXAIR.com

The timing control unit and the photoelectric sensor are equipped with a 9' (2.74m) power cord. The timing control unit is housed in a polycarbonate NEMA 4 / IP66 water tight enclosure.

There are four models of the EFC. Each includes the timing control unit and photoelectric sensor with a choice of solenoid valve sizes of 40, 100, 200 and 350 SCFM (1,133, 2,832, 5,664 and 9,911 SLPM).

EFC Specifications	
Power Supply Input	100-240VAC, 50/60Hz, 0.25 - 0.45A
Power Supply Output (To Sensor)	24VDC at 0.65A
Sensor	12-24VDC input, consumes 30mA
Sensing Range	Diffuse reflective to 3' (1 meter)
Enclosure Rating	NEMA 4 / IP66
Temperature Rating	-13˚F to 131˚F (-25˚C to 55˚C)
RoHS Compliant	Yes
CE Compliant	Yes

Models controlling two solenoid valves are available. Contact EXAIR for details.

$2,045.22 Annual Air Savings On A Flat Panel Display Blowoff

A flat panel display manufacturer runs 3 shifts. It takes a 40 second cycle to produce one fully assembled display. Prior to packaging, they use EXAIR's 12" (305mm) Super Ion Air Knife at 40 PSIG (2.8 BAR) to blow across the display to remove any static electricity, dust, debris and plastic flash from the panel surface. The air ran constantly. The displays are under the airflow only 10 seconds. Thirty seconds pass until the next display is in position. They manufacture 675 displays per shift (7.5 hrs.) for a total of 2,025 displays manufactured per day.

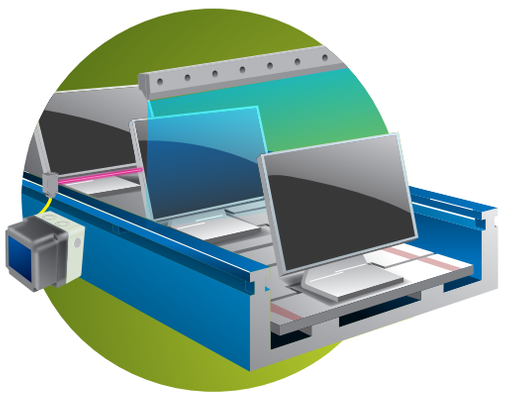

The timer was set to the "interval" setting when detecting the flat panel displays. The sensor was mounted 1" (25mm) prior to the Super Ion Air Knife blowoff station. When it detected the flat panel, it turned the air on immediately and started the 10 second timing sequence for closing the valve (shutting the air off). In the event the conveyor stopped, the air would no longer cycle on again until the next flat panel was detected.

Old Method

EXAIR's 12" (305mm) Super Ion Air Knife was supplied at 40 PSIG to clean the displays.

At 40 PSIG, EXAIR's 12" (305mm) Super Ion Air Knife consumes 20.4 SCFM (577 SLPM)

Non-stop blowing of 1,440 minutes (24 hours) per day x 20.4 SCFM = 29,376 SCF (831,341 SL) air usage per day.

EFC Solution

The EFC was installed to shut off the compressed air for 30 seconds of the 40 second cycle. (Turns air off for 75% of the cycle.)

Cost Difference

Most large plants know their air cost. If the actual cost is unknown, $0.25 per 1,000 SCF (28,329 SL) is reasonable.

Before the EFC installation:

29,376 SCF/1,000 = 29.38 x $0.25 = $7.34 air cost per day.

With the EFC installed:

The EFC shut the air off during the three 30 minute shift changes. Upon sensing the display, the timer turned on the compressed air for only 10 seconds of each 40 second cycle (25% of the time).

1,440 minutes per day – 90 minutes between shifts =
1,350 minutes of operation per day.
1,350 minutes x 25% = 337.5 minutes of air per day
337.5 minutes x 20.4 SCFM = 6,885 SCF (194,846 SL) air usage per day.
6,885 SCF/1,000 = 6.89 x $0.25 = $1.72 air cost per day
$7.34 (old air cost) – $1.72 (new air cost) =

$5.62 savings per day x 7 days a week =
$39.33 savings per week x 52 weeks a year =
$2,045.22 savings per year.

For Technical Assistance, Call an EXAIR Application Engineer 1-800-903-9247
Toll Free FAX (866) 329-3924 • E-mail: techelp@exair.com • www.exair.com

EXAIR_Cat36_25_FROMINDESIGN.indb 8 12/20/24 3:45 PM

$5,012.28 Annual Air Savings For Pre-Paint Bumper Cleaning

A manufacturer of car bumpers installed a 60" (1524mm) Super Ion Air Knife in the down draft cleaning area prior to their paint booth. The bumpers enter that area in the same orientation as they would when mounted to the automobile, moving at 10' (3m) per minute with a 12" (305mm) space between bumpers. The bumpers are under the blow off for 10 seconds. 6 seconds pass with no bumper in the ionized airflow. The operation runs around the clock with three shifts.

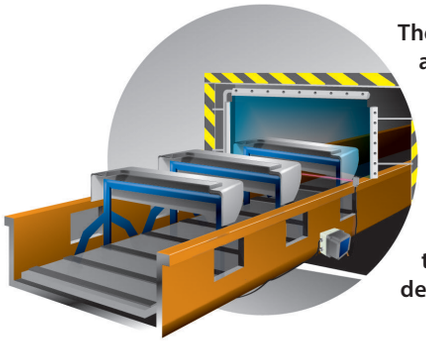

The timer was set to "interval" and the sensor mounted next to the Super Ion Air Knives. When it detected a bumper, it immediately turned on the air for 10 seconds. If the conveyor stopped, it would not turn the air on again until it detected the next bumper.

Old Method

EXAIR's 60" (1524mm) Super Ion Air Knife was supplied at 40 PSIG to clean the bumper.

At 40 PSIG, EXAIR's 60" (1524mm) Super Ion Air Knife consumes 102 SCFM (2,887 SLPM).

Non-stop blowing of 1,440 minutes (24 hours) per day x 102 SCFM = 146,880 SCF (4,156,704 SL) air usage per day.

EFC Solution

The EFC was installed to shut off the compressed air for the 6 seconds where no bumper was present - an on cycle reduction of 37.5%. 1,440 minutes x 37.5% = 540 minutes of off time per day

Cost Difference

Most large plants know their air cost. If the actual cost is unknown, $0.25 per 1,000 SCF (28,329 SL) is reasonable.

Before the EFC installation:
146,880 SCF/1,000 = 146.88 x $0.25 = $36.72 air cost per day.

With EFC installed: 146,880 SCF x 62.5% on cycle = 91,800 SCF/1,000 = 91.8 x $0.25 = $22.95 air cost per day.
$36.72 (old air cost) – $22.95 (new air cost) =

$13.77 savings per day x 7 days per week =
$96.39 savings per week x 52 weeks per year =
$5,012.28 savings per year.

$3,393 Annual Air Savings On A Tank Blowoff Operation

A company that refurbishes large tanks runs the tanks through an oven on a conveyor line to burn off old paint. Only one tank at a time can be processed and each takes 6 minutes to complete the journey. Super Air Knives are used for blowoff at the exit of the oven.

However, the tank travels through the oven for 5 minutes before it reaches the knives for blowoff. At 80 PSIG (5.5 BAR), the four knives consume 348 SCFM (9,854 SLPM). Once the tanks have been blown off, the conveyor stops, the air is shut off, and a new tank is loaded at the other end. The operation runs 30 tanks per day, 5 days a week.



The timer was set to "on/off delay". The sensor was mounted at the oven exit (1 minute away from the blowoff station). When the sensor detected a tank, the timer turned the air on for one minute, just as the next tank reached the blowoff station.

Old Method

It takes 6 minutes to complete the process.

6 minutes x 348 SCFM=

2,088 SCF (59,090 SL)
2,088 SCF x 30 tanks =
62,640 SCF (1,772,712 SL)

EFC Solution

The EFC was installed to shut off the compressed air for the 5 minutes where no tank was present (one minute of air on).

1 minute x 348 SCFM =
348 SCF x 30 tanks =
10,440 SCF (295,452 SL)

Cost Difference

Most large plants know their air cost. If the actual cost is unknown, $0.25 per 1,000 SCF (28,329 SL) is reasonable.

Before the EFC installation:
62,640 SCF/1,000 = 62.64 x $0.25 = $15.66 air cost per day.

With the EFC installed: 10,440 SCF/1,000 = 10.44 x $0.25 = $2.61 air cost per day. $15.66 (old air cost) – $2.61 (new air cost) =

$13.05 savings per day x 5 days per week =
$65.25 savings per week x 52 weeks per year =
$3,393 savings per year.

EXAIR_Cat36_25_FROMINDESIGN.indb 9 12/20/24 3:45 PM

An INTELLIGENT COMPRESSED AIR® Product

Digital Flowmeter

Digital Flowmeter™

Monitor compressed air usage and waste!



What is the Digital Flowmeter?

Anyone serious about lowering their energy consumption, operating an efficient plant or optimizing their compressed air system knows that measuring compressed air consumption is the first step toward efficiency. EXAIR's Digital Flowmeter is the easy way to monitor compressed air consumption and waste! The digital display shows the exact amount of compressed air being used, making it easy to identify costly leaks or inefficient air products. Many companies install the Digital Flowmeter on each major leg of their air distribution system to constantly monitor and benchmark compressed air usage.

Why the Digital Flowmeter?

The Digital Flowmeter has an LED display that directly indicates the SCFM or m^3/hr volume of airflow through that pipe. Models from 1/2" to 4" iron pipe are in stock. Each Digital Flowmeter is calibrated for the pipe size to which it is mounted. The Digital Flowmeter is designed for permanent or temporary mounting to the pipe. It requires the user to drill two small holes through the pipe using the included drill bit and locating fixture. The two flow sensing probes of the flowmeter are inserted in these holes. The unit seals to the pipe once the clamps are tightened. No cutting, welding, adjustments or calibration are ever required. If the unit needs to be removed, block-off rings are available. NEMA Type 4 (IP66) meters available. Consult the factory for NEMA 4 meters.



How it Works?

These flowmeters measure flow by maintaining a temperature differential between the two probes inserted into the compressed air pipe. One probe is kept warmer than the other and mass flow rate is determined by the amount of heat required to maintain the temperature differential. The flow rate, in SCFM or m^3/hr, is shown on the large four-digit display. A 4-20 mA output and pulse output permit remote display of the flow value and data collection.

Advantages

All EXAIR Digital Flowmeters are available in three fundamental versions and offer these advantages over traditional flowmeters.

- No moving parts
- Summing Remote Display and Data Logger available
- Optional RS-485 output serial communication board available
- Sensitive at low flows
- No calibration or set up required
- Includes all components for installation
- Models from 1/2" to 4" Schedule 40 iron pipe in stock
- Models are available for sizes 1/2" to 8" in iron pipe
- Models are available for sizes 3/4" to 4" in copper pipe
- Models are available for sizes 25mm through 101mm in aluminum pipe
- Easy to install

EXAIR_Cat36_25_FROMINDESIGN.indb 10 12/20/24 3:45 PM

Digital Flowmeter Versions

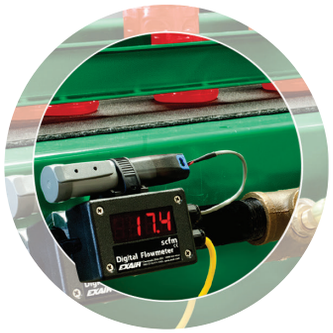



Flowmeter Versions

These three versions of digital flowmeter can be used on Schedule 40 iron pipe, Type L copper pipe, or the nominal pipe sizes listed on Page 13.

Standard The original Digital Flowmeter provides accuracy and an easy to read display of current compressed air consumption, daily consumption or cumulative consumption. Digital Flowmeter with optional Data Logger shown at left.

CONTROL ENGINEERING
2021
ENGINEERS' CHOICE AWARDS
FINALISTS

Pressure Sensing Digital Flowmeters monitor pressure and flow. A pressure sensor is mounted between the two flow sensing probes. The pressure signal is provided as a second milliamp output. The display can be configured to show pressure or flow. The pressure signal is also available through wired or wireless serial outputs. The pulse output is replaced with a transistor output configured as a low-pressure alarm when the pressure drops below 50 PSIG. Available on 2" and 50mm or larger flowmeters.

CONTROL ENGINEERING
2020
ENGINEERS' CHOICE AWARDS
FINALISTS

Hot Tap This meter allows for installation under pressure, eliminating the need to isolate and remove pressure from the pipe it is being installed upon. It incorporates two valves that the probes pass through and a muffler that collects chips from the drilling process. It takes an equally short amount of installation time as the standard meters. Available on 2" and 50mm or larger flowmeters.



EXAIR_Cat36_25_FROMINDESIGN.indb 11 12/20/24 3:45 PM

Digital Flowmeter Accessories

Need an EXAIR Drill Guide?

Basic kits for EXAIR's Digital Flowmeters include all of the components for installation, which are: a drill guide to locate the holes for the sensing probes accurately, a drill bit so the holes are the proper size and a hex wrench for installing the pipe clamp securely. If you have purchased a Digital Flowmeter in the past and have these components for the same sized flowmeter, you can order the flowmeter without a drill guide kit by adding the "-DG" suffix to the model number. (Model Number Configurator on Page 13). Drill guides can also be ordered separately.



EXAIR's Drill Guide for Digital Flowmeter.

Drill Guides

Model #	Description
900817	Drill Guide Kit Only, 1/2", 3/4", 1", 1-1/4", 1-1/2" Schedule 40 and Type L Copper (double ring mount)
901281	Drill Guide Kit Only, 2" and 2.5" Schedule 40 and Type L Copper (single ring mount)
900939	Drill Guide Kit Only, 3" Schedule 40 and Type L Copper
900871	Drill Guide Kit Only, 4" Schedule 40 and Type L Copper
900872	Drill Guide Kit Only, 5" Schedule 40 and Type L Copper
901151	Drill Guide Kit Only, 6" Schedule 40 and Type L Copper
902098	Drill Guide Kit Only, 8" Schedule 40 and Type L Copper
901994	Drill Guide Kit Only for 2" and Up Aluminum Compressed Air Pipe

What is the Summing Remote Display?

EXAIR's Summing Remote Display for the Digital Flowmeter has a four-digit LED display that makes it easy to monitor compressed air consumption from a convenient location. With the push of a button, the display cycles to show the current air consumption, usage for the previous 24 hours, and total cumulative usage. The Summing Remote Display shows that flow measurement, the daily and cumulative usage and is frequently used when the Digital Flowmeter is in an obscure, hard to read location. Regular monitoring of the air usage of a machine, process or department makes it possible to save thousands of dollars per year in compressed air waste by identifying the costly leaks or inefficient air products. The Summing Remote Display is CE and RoHS compliant

Summing Remote Display

Model #	Description
9150	LED Readout displays SCFM
9150-M3	LED Readout displays m^3/hr

It is pre-wired with 50' (15.2m) of cable and is powered by the Digital Flowmeter. Mounting hardware is included.



EXAIR's Summing Remote Display for the Digital Flowmeter.

What is the USB Data Logger?

EXAIR's award-winning Model 9147 USB Data Logger connects directly to your Digital Flowmeter and is simple to use. Download the software to configure the Data Logger to record your flow rate from once a second (about nine hours of data) up to once every 12 hours (over 2 years!).

When the Data Logger is removed from the Digital Flowmeter and plugged into a computer, the data can be viewed in the software or exported directly into Microsoft Excel®. The Data Logger is available pre-installed on the Digital Flowmeter. Data Loggers can be added to your Digital Flowmeter by adding a suffix to the model number (Model Number Configurator on Page 13). They can also be ordered separately.

USB Data Logger

Model #	Description
9147	USB Data Logger for Digital Flowmeter

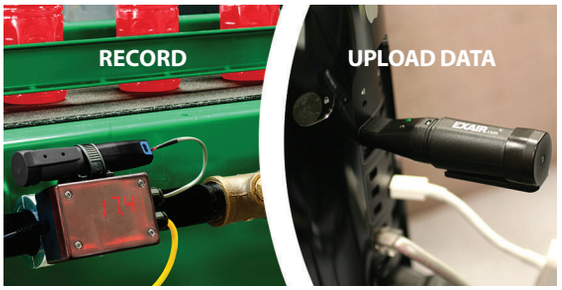

EXAIR's USB Data Logger for the Digital Flowmeter.

What are Block-Off Rings?

Block-Off rings are used to safely cover and seal any holes which were drilled for the Digital Flowmeters. They allow for moving a Digital Flowmeter to multiple locations in your piping system.



Block-Off Rings

Model #	Description
901327	Block-Off Rings for 9090
901328	Block-Off Rings for 9091
901329	Block-Off Rings for 9092 or 9092-M3
901331	Block-Off Rings for 9094 or 9094-M3

Model #	Description
901332	Block-Off Rings for 9095 or 9095-M3
901333	Block-Off Rings for 9096 or 9096-M3
901334	Block-Off Rings for 9097 or 9097-M3
901335	Block-Off Rings for 9098 or 9098-M3
902099	Block-Off Rings for 90100

EXAIR_Cat36_25_FROMINDESIGN.indb 12 12/20/24 3:45 PM

Digital Flowmeter Model Numbering

1. Choose the **Version** of Digital Flowmeter using one of these prefixes:

Version

Standard	**No Prefix**
Hot Tap DFM (available on 2" and 50mm or larger)	**H**
Pressure Sensing DFM (available on 2" and 50mm or larger)	**P**

2. Choose the **Size** of your compressed air pipe:

Size

Model #	Pipe Size
9090	1/2"
9091	3/4"
9092	1"
9093	1-1/4"
9094	1-1/2"
9095	2"
9096	2-1/2"
9097	3"
9098	4"
9099	5"
90100	6"
90101	8"
91025	for nominal pipe 25mm
91040	for nominal pipe 40mm
91050	for nominal pipe 50mm
91063	for nominal pipe 63mm
91076	for nominal pipe 76mm
91101	for nominal pipe 101mm

3. Choose the **Configuration** you want by picking one suffix below:

Configuration

Model #	Configuration
-DG	... removes Drill Guide
-DAT	... includes Data Logger w/ Drill Guide
-DG-DAT	... includes Data Logger, removes Drill Guide

CU	... for Copper Pipe w/ Drill Guide
CU-DG	... for Copper Pipe, removes Drill Guide
CU-DAT	... for Copper Pipe includes Data Logger w/ Drill Guide
CU-DG-DAT	... for Copper Pipe includes Data Logger, removes Drill Guide

-M3	... Metric (displays m^3/hr) w/ Drill Guide
-M3-DG	... Metric (displays m^3/hr), removes Drill Guide
-M3-DAT	... Metric (displays m^3/hr) includes Data Logger w/ Drill Guide
-M3-DG-DAT	... Metric (displays m^3/hr) includes Data Logger, removes Drill Guide

Configuration Samples

Version	Size	Configuration	Summary
	9090	-DG	Model 9090-DG Standard 1/2" DFM without a Drill Guide
H	9098	CU	Model H9098CU Hot Tap 4" DFM for Copper Pipe w/Drill Guide
P	9095		Model P9095 Pressure Sensing 2" DFM w/Drill Guide
	91025	-DAT	Model 91025-DAT 25mm Nominal Pipe DFM w/Drill Guide and Data Logger



Digital Flowmeter

EXAIR's Digital Flowmeter is a product designed to monitor compressed air consumption and flow, offering an easy solution for tracking these metrics. Equipped with a digital display, it provides the precise amount of compressed air being used. This feature allows for the identification of costly leaks or inefficient air products. The device is easy to install, sensitive at low flows, requires no calibration or setup, and includes all components necessary for installation.

Digital Flowmeter

(Add specific Configuration from Page 13)

Model #	Pipe Size	Flow Range*
9090	1/2"	1–100 SCFM (1.7-170 m^3/hr)
9091	3/4"	1–150 SCFM (1.7-255 m^3/hr)
9092	1"	2–200 SCFM (3.4-340 m^3/hr)
9093	1-1/4"	4–400 SCFM (6.8-680 m^3/hr)
9094	1-1/2"	4–400 SCFM (6.8-680 m^3/hr)
9095	2"	6–600 SCFM (10.2-1020 m^3/hr)
9096	2-1/2"	8-800 SCFM (13.6-1359 m^3/hr)
9097	3"	12-1200 SCFM (19.8-2040 m^3/hr)
9098	4"	20-2000 SCFM (34.2-3398 m^3/hr)
9099	5"	30-3000 SCFM (51-5100 m^3/hr)
90100	6"	50-5000 SCFM (85.2-8496 m^3/hr)
90101	8"	100-6000 SCFM (169.8-10194 m^3/hr)

Digital Flowmeter Type L Copper Pipe

(Add specific Configuration from Page 13)

Model #	Pipe Size	Flow Range*
9091CU	3/4"	1–150 SCFM (1.7-255 m^3/hr)
9092CU	1"	2–200 SCFM (3.4-340 m^3/hr)
9093CU	1-1/4"	2–200 SCFM (3.4-340 m^3/hr)
9094CU	1-1/2"	4–400 SCFM (6.8-680 m^3/hr)
9095CU	2"	6–600 SCFM (10.2-1020 m^3/hr)
9096CU	2-1/2"	8-800 SCFM (13.6-1359 m^3/hr)
9097CU	3"	10-1000 SCFM (17-1699 m^3/hr)
9098CU	4"	20-2000 SCFM (34-3398 m^3/hr)

* Calibrated range.
Usable range higher.
Please consult factory.

Note: Flow ranges for all Digital Flowmeters in top 3 tables except for Hot Tap Digital Flowmeters, shown below.

Digital Flowmeter - Nominal Pipe Size - Millimeters

(Add specific Configuration from Page 13)

Model #	Pipe Size	Flow Range*
91025	25mm	2-200 SCFM (3.4-340 m^3/hr)
91040	40mm	4-400 SCFM (6.8-680 m^3/hr)
91050	50mm	6-600 SCFM (10.2-1020 m^3/hr)
91063	63mm	8-800 SCFM (13.6-1359 m^3/hr)
91076	76mm	10-1000 SCFM (17-1699 m^3/hr)
91101	101mm	20-2000 SCFM (34-3398 m^3/hr)



EXAIR's Digital Flowmeter family is available in many sizes from stock.

Hot Tap Digital Flowmeter – Schedule 40 Iron Pipe

(Add specific Configuration from Page 13)

Model #	Pipe Size	Flow Range*
H9095	2"	6-600 SCFM (10.2-1020 m^3/hr)
H9096	2-1/2"	8-800 SCFM (13.6-1359 m^3/hr)
H9097	3"	12-1200 SCFM (20-2039 m^3/hr)
H9098	4"	20-2000 SCFM (34-3398 m^3/hr)
H90100	6"	50-5000 SCFM (85-8495 m^3/hr)
H90101	8"	100-6000 SCFM (169-10194 m^3/hr)

Hot Tap Digital Flowmeter – Type L Copper Pipe

(Add specific Configuration from Page 13)

Model #	Pipe Size	Flow Range*
H9095CU	2"	6-600 SCFM (10.2-1020 m^3/hr)
H9096CU	2-1/2"	8-800 SCFM (13.6-1359 m^3/hr)
H9097CU	3"	10-1000 SCFM (17-1699 m^3/hr)
H9098CU	4"	20-2000 SCFM (34-3398 m^3/hr)
H90100CU	6"	40-4000 SCFM (68-6796 m^3/hr)

Digital Flowmeter Specifications

	Wired	Hot Tap	Pressure Sensing
Accuracy	5% of reading plus 1% of range for flows from 10% to 100% of indicated range at air temperatures between 20°F and 120°F.	5% of reading plus 1% of range for flows from 10% to 100% of indicated range at air temperatures between 20°F and 120°F.	PRESSURE: +/- 2 PSIG maximum. +/- 0.5 PSIG at 68°F.
Operating Pressure	200 PSIG maximum on Sch. 40 iron and on Type L Copper below 3". Consult EXAIR for other materials and higher pressures	130 PSIG maximum on Sch. 40 iron. Consult EXAIR for other materials and higher pressures	200 PSIG maximum on Sch. 40 iron and on Type L Copper below 3". Consult EXAIR for other materials and higher pressures
Input Power	250 mA at 24V DC	250 mA at 24V DC	250 mA at 24V DC
Output resistance	600 Ohms maximum	600 Ohms maximum	600 Ohms maximum
Wetted Materials	Stainless Steel, Gold, Thermal epoxy, Viton	Stainless Steel, Gold, Thermal epoxy, Viton, PTFE, Aluminum	Stainless Steel, Gold, Thermal epoxy, Viton
Ring Material	Aluminum	Aluminum	Aluminum
Display	Four digit LED	Four digit LED	Four digit LED
Response Time	One second to 63% of change in value at flows above 30% of range	One second to 63% of change in value at flows above 30% of range	One second to 63% of change in value at flows above 30% of range
Pressure Range	N/A	N/A	0-145 PSIG operating range 200 PSIG maximum 145 PSIG full sc ale of mA output For best accuracy, avoid pressures above 145 PSIG
Compliance	CE and RoHS	CE and RoHS	CE and RoHS

Note: For use with compressed air and nitrogen only.

For Technical Assistance, Call an EXAIR Application Engineer 1-800-903-9247
Toll Free FAX (866) 329-3924 • E-mail: techelp@exair.com • www.exair.com

EXAIR_Cat36_25_FROMINDESIGN.indb 14 12/20/24 3:45 PM

Small Digital Flowmeter – Schedule 40 Iron Pipe**

Series	Pipe Size	A in	A mm
9090	1/2"	3.31	84
9091	3/4"	3.49	89
9092	1"	3.87	98
9093	1-1/4"	4.24	108
9094	1-1/2"	4.62	117

DOWNLOAD drawings at EXAIR.com

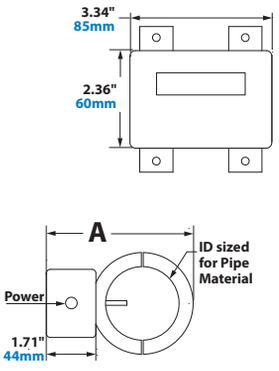

Large Digital Flowmeter – Schedule 40 Iron Pipe**

Series	Pipe Size	A in	A mm
9095	2"	5.34	136
9096	2-1/2"	6.09	155
9097	3"	6.71	171
9098	4"	7.71	196
9099	5"	8.84	224
90100	6"	9.84	250
90101	8"	11.84	301

DOWNLOAD drawings at EXAIR.com

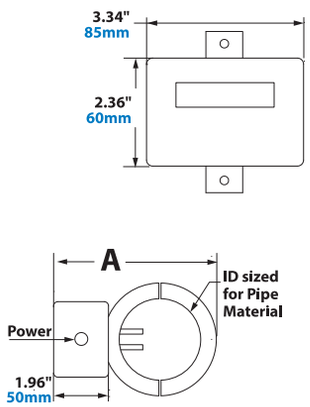

Small Digital Flowmeter – Type L Copper Pipe**

Series	Pipe Size	A in	A mm
9091CU	3/4"	3.49	89
9092CU	1"	3.68	93
9093CU	1-1/4"	3.87	98
9094CU	1-1/2"	4.24	108

DOWNLOAD drawings at EXAIR.com

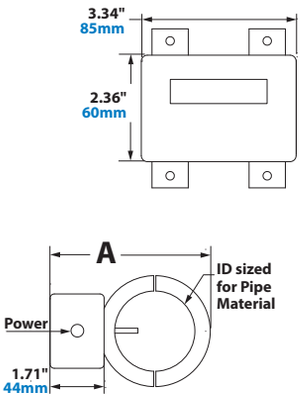

Large Digital Flowmeter – Type L Copper Pipe**

Series	Pipe Size	A in	A mm
9095CU	2"	5.09	129
9096CU	2-1/2"	5.84	148
9097CU	3"	6.34	161
9098CU	4"	7.34	186

DOWNLOAD drawings at EXAIR.com

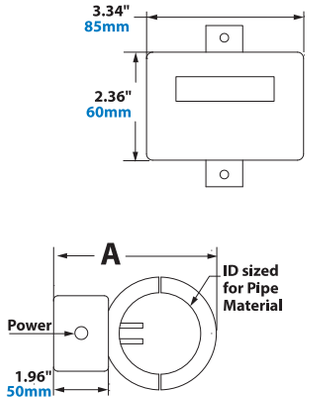

Small Digital Flowmeter – Nominal Pipe**

Series	Pipe Size	A in	A mm
91025	25mm	3.49	89
91040	40mm	4.24	108

DOWNLOAD drawings at EXAIR.com

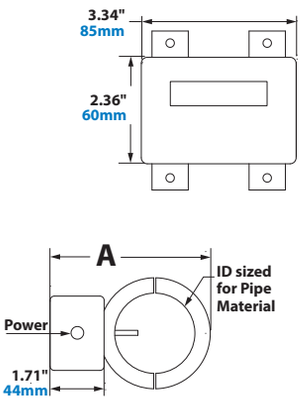

Large Digital Flowmeter – Nominal Pipe**

Series	Pipe Size	A in	A mm
91050	50mm	5.1	129
91063	63mm	5.6	142
91076	76mm	6.3	161
91101	101mm	7.3	186

DOWNLOAD drawings at EXAIR.com

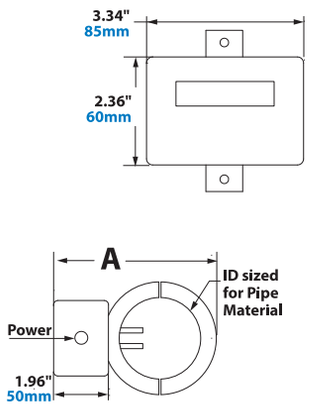

** If dimensions are critical for mounting, please consult the factory

Hot Tap Flowmeter Dimensions

Hot Tap Digital Flowmeter – Schedule 40 Iron Pipe

Series	Pipe Size	A	
		in	mm
H9095	2"	6.43	163
H9096	2-1/2"	7.20	183
H9097	3"	7.82	199
H9098	4"	8.82	224
H90100	6"	10.95	278
H90101	8"	12.95	329

DOWNLOAD drawings at EXAIR.com

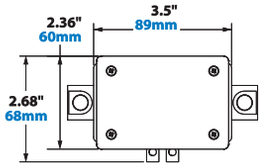

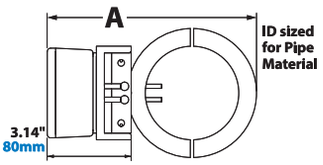

Hot Tap Digital Flowmeter – Type L Copper Pipe

Series	Pipe Size	A	
		in	mm
H9095CU	2"	6.18	157
H9096CU	2-1/2"	6.95	177
H9097CU	3"	7.45	189
H9098CU	4"	8.45	215
H90100CU	6"	10.45	265

DOWNLOAD drawings at EXAIR.com

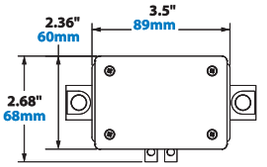

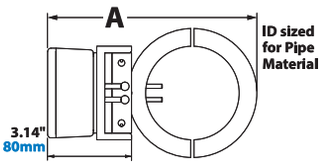



The Hot Tap Digital Flowmeters allow installation when compressed air piping is under pressure. By eliminating the need to isolate and remove pressure from the pipe, these compressed air flowmeters reduce installation time while maintaining safety.

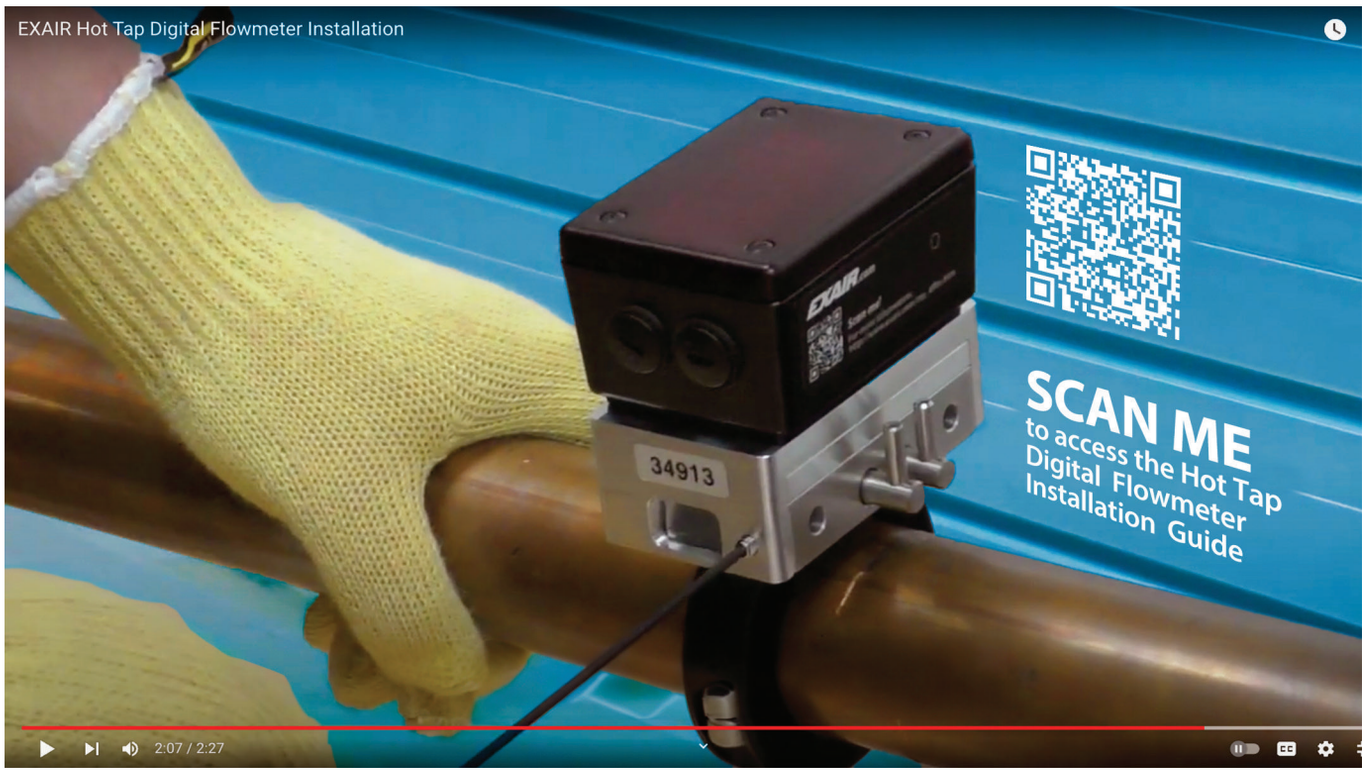

For Technical Assistance, Call an EXAIR Application Engineer 1-800-903-9247
Toll Free FAX (866) 329-3924 • E-mail: techelp@exair.com • www.exair.com

EXAIR_Cat36_25_FROMINDESIGN.indb 16 12/20/24 3:45 PM

Digital Sound Level Meter™

Prevent worker-related hearing loss!



What Is The Digital Sound Level Meter?

EXAIR's Model 9104 Digital Sound Level Meter is an easy to use instrument that can measure and monitor the sound level pressure in a wide variety of industrial environments. The source of loud noises can be quickly identified and isolated so corrective measures can be taken to reduce or eliminate the problem.



For compressed air noise, it is often as simple as replacing the existing inefficient blowoffs with EXAIR's engineered compressed air products such as the Super Air Knife, Super Air Amplifier or Super Air Nozzles. In many cases, the EXAIR products can reduce noise levels by 10 dBA which is perceived as cutting the sound volume in half.



The Sound Level Meter identifies a potential source of hearing loss.

Why The Digital Sound Level Meter?

Hearing loss induced by high noise in the workplace is a common problem. Exposure to high noise levels for an extended period of time can lead to permanent hearing loss for workers not wearing proper hearing protection. The Digital Sound Level Meter can help employers protect workers by monitoring noise levels so they don't exceed the limits shown in OSHA Standard 29 CFR – 1910.95(a). Failure to comply can result in hefty fines.

OSHA Maximum Allowable Noise Exposure							
Hours per day (constant noise)	8	7	4	3	2	1	0.5
Sound level dBA	90	91	95	97	100	105	110

OSHA Standard 29 CFR - 1910.95 (a)



Model 9104 Digital Sound Level Meter comes complete with removable wind screen, battery and a protective case.

Accurate and responsive, the Digital Sound Level Meter measures the decibels of the sound and displays the reading on the large LCD display that has a backlight button for easier viewing. An "F/S" response time button provides a choice of slow response measurements for comparatively stable noise measurement or fast for varying noise. The "Max Hold" setting will measure the maximum noise level of sounds and updates continuously if a louder sound is detected. Certification of accuracy and calibration traceable to NIST (National Institute of Standards and Technology) is included.

Advantages

- Measures sound level range from 35 dB - 130 dB (Low: 35 to 100; High: 65 to 130 dB)
- Frequency range 31.5Hz - 8kHz
- A and C weightings (check compliance with safety regulations and acoustic analysis)
- Slow (1 sec) and fast (125ms) response settings to check peak and average noise levels
- Maximum hold feature to measure peak sound levels
- Accuracy is ± 1.5 dB
- NIST Certification included
- Four digit LCD display in 0.1 dB steps with backlight
- Battery life is 50 hours (typical) with low battery alert
- Automatic power off after 15 minutes of non-use
- Meets CE, ANSI and IEC Type 2 SLM standards
- Tripod mounting ideal for taking long term measurements (tripod not included)
- Removable windscreen for use in windy conditions to reduce misreads
- Includes protective carrying case, 9V battery, instruction manual and removable windscreen

EXAIR_Cat36_25_FROMINDESIGN.indb 17 12/20/24 3:45 PM

An INTELLIGENT COMPRESSED AIR® Product

Ultrasonic Leak Detector

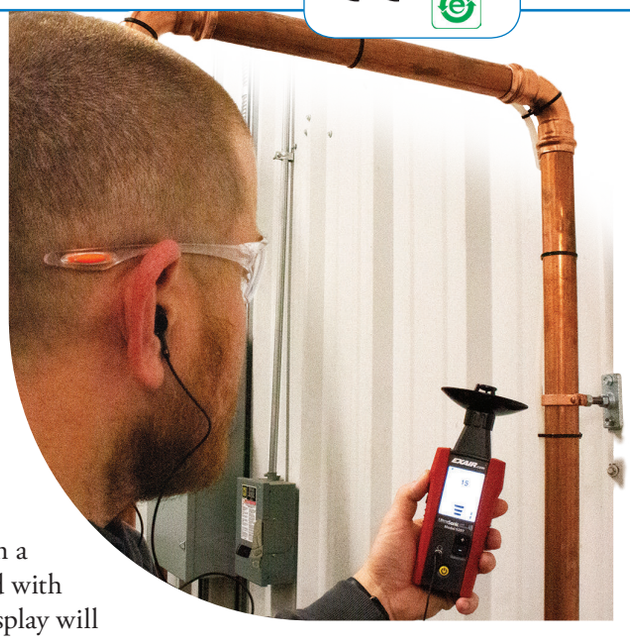

Ultrasonic Leak Detector

Locate costly leaks in your compressed air system!

What Is The Ultrasonic Leak Detector?

The Ultrasonic Leak Detector (ULD) is a hand-held, high quality instrument that can locate costly leaks in a compressed air system.



A person using the ULD need only aim it in the direction of a suspected leak. When a leak is present, an audible tone can be heard with the use of the headphones, and the LED display will light. Testing the various unions, pipes, valves and fittings of a complete installation can be done quickly and effectively at distances up to 20' (6.1m) away!

Why The Ultrasonic Leak Detector?

Plants that aren't maintained can easily waste **up to 30%** of the compressor output through leaks that go undetected. Compressing air is an expensive operation. Saving the wasted compressed air reduces overall operating costs. In large plants, the cost of a small air leak may be insignificant, but many small leaks when located and repaired can amount to huge energy savings.

What is Ultrasound?

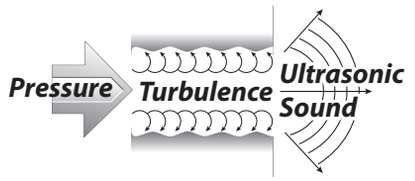

Ultrasonic sound is a range of sound that is above human hearing capacity. Most people can hear frequencies from 20 Hz to 20 kHz. Sound from 20 kHz to 100 kHz cannot be heard and is called "ultrasonic". The Model 9207 Ultrasonic Leak Detector converts ultrasonic sound emissions to a range that is audible to people. (The sound generated by the ULD is 32 times lower in frequency than the sound that is received.)

Advantages

- Detects any pressurized air leak up to 20 feet (6.1m) away
- Converts ultrasound to an audible frequency
- LED display confirms the leak location
- Detects leaks in noisy industrial environments
- Sensitivity controls provide accurate detection
- Not affected by contaminants or windy conditions
- Includes accessories to detect leaks in hard to reach areas
- Rugged carrying case
- Complies with the International Electrotechnical Commission (IEC) 61325-1

Applications

- Locates leaks in air, steam and non-flammable gas systems including pipes, fittings, valves, cylinders and pressure vessels
- Finds the source of bearing and gear wear
- Locates arcing in an electrical system
- Detects refrigeration and air conditioning system leaks
- Locates leaks in brake systems, tubes, tires and radiators
- Senses cracks in moving rubber v-belts
- Detects leaks in vacuum systems
- Checks condition of engine seals



LED indicators on the Ultrasonic Leak Detector show the exact source of the leak or problem.

EXAIR_Cat36_25_FROMINDESIGN.indb 18 12/20/24 3:45 PM

Ultrasonic Leak Detector

In a plant where loud noise levels exist, it is very difficult to locate leaks by merely listening for them. Most plant noises are in the normal audible range of human hearing, while air escaping from a small orifice is ultrasonic. The ULD can be adjusted to filter out background noise using a "+" or "-" sensitivity adjustment. The parabola or tubular extension (shown below) can also be attached to the ULD to mask out intense background noise. The ULD detects only the ultrasonic sounds that are generated.



Parabola | Tubular Adaptor | Tubular Extension | Earbuds

Ultrasonic sound is directional in transmission and is loudest at the source. Turbulence created by the air forced through a small orifice generates ultrasonic sound. This emitted sound is called “white noise” and occurs when the air moves from a high pressure area such as a pipe or vessel and escapes to a low pressure area such as the room. The Ultrasonic Leak Detector converts the turbulent flow to a frequency that can be heard using the earbuds. As the ULD moves closer to the leak, more LEDs on the display light to confirm the source of the leak.

In some cases, the suspected leak is in a hot area and/or close to moving parts. The tubular extension and parabola make it possible to probe these difficult locations from a distance to isolate the leak.



The Model 9207 Ultrasonic Leak Detector comes complete with a hard-shell plastic case, earbuds, parabola, tubular adaptor, tubular extension and 4 AA batteries.



The Model 9207 Ultrasonic Leak Detector with tubular extension quickly pinpoints a costly leak in a noisy industrial environment.

Find Leaks - Pay For Your Ultrasonic Leak Detector

Consider one small leak that is equivalent to a 1/16" (1.6mm) diameter hole. At 80 PSIG (5.5 BAR), it consumes 3.8 SCFM or 108 SLPM.

Most large plants know their air cost.
If you don’t know your actual cost per 1,000 SCF,
a reasonable average is $0.25 per 1,000 SCF (28,329 SL).

Dollars consumed per hour = SCFM consumed x 60 minutes x cost/1,000 SCF
= 3.8 × 60 × $0.25/1,000
= $0.06 per hour
= $1.44 per 24 hour period
= $10.08 per week
= $524.16 per year

ORDER ONLINE at EXAIR.com

EXAIR_Cat36_25_FROMINDESIGN.indb 19 12/20/24 3:45 PM

An INTELLIGENT COMPRESSED AIR® Product

Super Air Knife

Super Air Knife™

Quiet, hard-hitting curtain of air for blowoff, cleaning, drying, and cooling.

- ☑ **Surprisingly Quiet! - Only 69 dBA!**
- ☑ **Reduced Air Consumption!**
- ☑ **Uniform Airflow!**
- ☑ **40:1 Air Amplification!**



Also available from stock in Type 316 stainless steel and PVDF! For Corrosion Resistance



What Is The Super Air Knife?

EXAIR's Super Air Knife is the latest generation of our engineered air knife that dramatically reduces compressed air usage and noise when compared to other blowoffs. The Super Air Knife offers a more efficient way to clean, dry or cool parts, webs or conveyors. It delivers a uniform sheet of laminar airflow across the entire length with hard-hitting force.

Noisy blowoffs become a whisper when replaced with the compact Super Air Knife. Even at high pressures of 80 PSIG (5.5 BAR), the sound level is surprisingly quiet at 69 dBA for most applications! Air amplification ratios (entrained air to compressed air) of 40:1 are produced. Meets OSHA maximum dead-end pressure and noise requirements.

Built to Last 5 yr. WARRANTY
See our Terms & Conditions page for complete details.



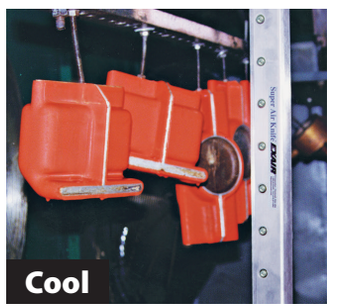

Applications

- Part drying after wash
- Sheet cleaning in strip mills
- Conveyor cleaning
- Part or component cooling
- Web drying or cleaning
- Environmental separation
- Pre-paint blowoff
- Bag opening/filling operations
- Scrap removal on converting operations

Advantages

- Quiet - 69 dBA for most applications
- Minimal air consumption
- 40:1 air amplification
- Uniform airflow across entire length
- Variable force and flow
- No moving parts - maintenance free
- Easy mounting - compressed air inlets on each end and bottom
- Compact, rugged, easy to install
- Recessed hardware
- Stock lengths to 108" (2743mm) in aluminum, 303 stainless steel, and 316 stainless steel (ss - for temperatures up to 800°F (427°C), food processing or or corrosive environments), and PVDF up to 54" (1372mm) for superior corrosion resistance.
- Special lengths available
- Unlimited system lengths of uninterrupted airflow available

For Technical Assistance, Call An EXAIR Application Engineer 1-800-903-9247
Toll Free FAX (866) 329-3924 • E-mail: techelp@exair.com • www.exair.com

EXAIR_Cat36_25_FROMINDESIGN.indb 20 12/20/24 3:45 PM

Dry

The laminar airflow of the Super Air Knife is perfect for removing moisture prior to packaging, painting, labeling, bar coding and assembly. Common applications include drying parts, rolled steel, circuit boards, webs, bottles, cans and more. Velocity is easily adjusted from a "blast" to a "breeze" with a pressure regulator.

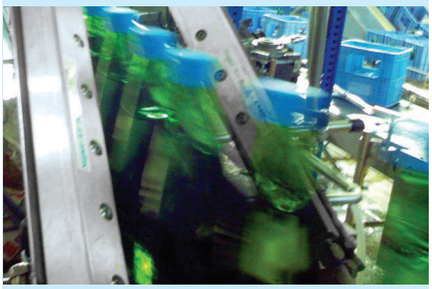

Fast moving bottles are blown dry by (2) Model 110012 12" (305mm) Super Air Knives prior to labeling.



Model 110006 6" (152mm) Super Air Knife removes residual water from can bottoms after a rinse process, eliminating water damage to packaging and shipping materials.



Model 110054 54" (1372mm) Super Air Knife dries stamped parts that exit a washer.

Blowoff

The Super Air Knife is ideal for blowing off chips, dirt or water from parts, webs or conveyors. It delivers a uniform sheet of air that has the same force across the entire length. There are no interruptions or "dead spots", which means all surfaces are dried or cleaned. The Super Air Knife is available in aluminum, stainless steel, or PVDF for corrosive and high temperature applications.



A Model 110048PKI 48" (1219mm) Super Air Knife with Plumbing Kit installed uses EXAIR's Universal Air Knife Mounting System to maintain proper position for removing dust on a conveyor belt and eliminate carryover accumulation.

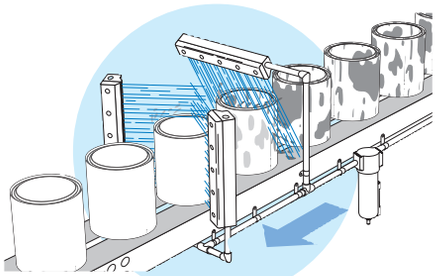

(3) Model 110012 12" (305mm) Super Air Knives blow excess honing oil off machined engine sleeves.

Cool

Large volumes of airflow can be generated in very tight spaces due to the compact size of the Super Air Knife. Flow and force are easily controlled with a pressure regulator, allowing fast or gradual cooling. Shims can be installed if additional hard-hitting velocity is required.



A Model 110018 18" (457mm) Super Air Knife cools molded plastic following dip molding.



With a 40:1 air amplification ratio, a high volume of airflow is the result from minimal air input to keep linear induction motors from overheating.

Open, Float, Separate

The uniform airflow exits the Super Air Knife in a perfectly straight line (does not deflect). It is ideal for opening bags and pouches, floating webs, and keeping environments separate.

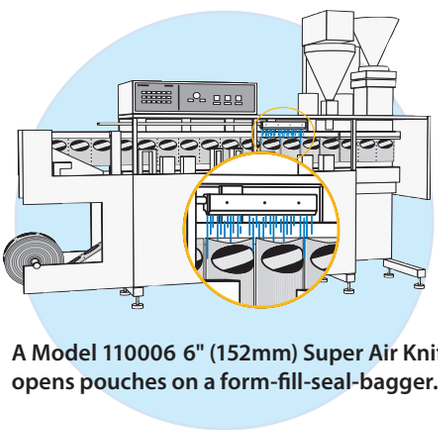

A Model 110006 6" (152mm) Super Air Knife opens pouches on a form-fill-seal-bagger.

Super Air Knife

How The Super Air Knife Works

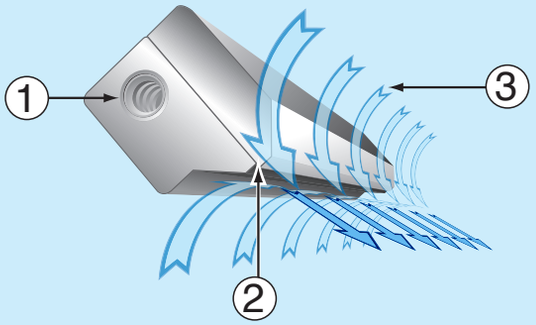

Compressed air flows through an inlet (1) into the plenum chamber of the Super Air Knife. The flow is directed to a precise, slotted orifice. As the primary airflow exits the thin slotted nozzle (2), it follows a flat surface that directs the airflow in a perfectly straight line. This creates a uniform sheet of air across the entire length of the Super Air Knife. Velocity loss is minimized and force is maximized as the room air (3) is entrained into the primary airstream at a ratio of 40:1. The result is a well defined sheet of laminar airflow with hard-hitting force and minimal wind shear.

Intelligent Use Of Compressed Air

Almost every industrial facility has at least one compressor that is used for hundreds of different tools, equipment and operations. While most applications for compressed air present no real problems, some do. Improper use can translate into unnecessary energy costs, high noise levels and dangerous exposure of personnel to high pressure air.

Reduce Energy Costs

The best way to cut energy costs is through proper maintenance and use of the compressed air system. Leaks and dirty filters require maintenance on a regular basis. Energy savings can also be realized when replacing outdated motors and controls with high efficiency models that often pay for themselves in a short period of time. The most important factor to dramatically boost efficiency is to use proper compressed air products. **The Super Air Knife uses only 1/3 of the compressed air of typical blowoffs.**

Reduce Noise Levels

High noise levels are a common problem for many plants. Compressed air noise often exceeds OSHA (Occupational Safety and Health Administration) noise level exposure requirements, resulting in hearing loss to those working in close proximity. The sound level of the Super Air Knife is quiet at 69 dBA, even at high pressures of 80 PSIG (5.5 BAR). Using the Super Air Knife, it is possible to obtain hard-hitting force without the high noise.

OSHA Maximum Allowable Noise Exposure							
Hours per day (constant noise)	8	7	4	3	2	1	0.5
Sound level dBA	90	91	95	97	100	105	110

OSHA Standard 29 CFR - 1910.95 (a)

Eliminate Harmful Dead End Pressures

Air can be dangerous when the outlet pressure of a hole, hose or copper tube is higher than 30 PSIG (2 BAR). In the event the opening is blocked by a hand or other body part, air may enter the bloodstream through the skin, resulting in a serious injury. The Super Air Knife has been engineered for safety and cannot be dead-ended. It is safe to operate at higher pressures and complies with OSHA standard 1910.242(b).

Replacement For Expensive, Noisy Blowers

Energy conscious plants might think a blower to be a better choice due to its slightly lower electrical consumption compared to a compressor. In reality, a blower is an expensive capital expenditure that requires frequent downtime and costly maintenance of filters, belts and bearings.

Here are some important facts:

- Filters must be replaced every one to three months.
- Belts must be replaced every three to six months.
- Blower bearings wear out quickly due to the motor that must turn at 17,000-20,000 RPM in order to generate effective airflows.
- Poorly designed seals that allow dirt and moisture infiltration along with environments above 125°F (52°C) decrease the one year bearing life.
- **Typical bearing replacement is at least once a year at a cost near $1000.**
- Many bearings can't be replaced in the field, resulting in downtime to send the assembly back to the manufacturer.
- Many blowers generate heat, making conditions uncomfortable and difficult to use for cooling applications.

Blowers take up a lot of space and often produce sound levels that exceed OSHA noise level exposure requirements. Air volume and velocity are often difficult to control since mechanical adjustments are required.

EXAIR_Cat36_25_FROMINDESIGN.indb 22 12/20/24 3:46 PM

Compare These Blowoffs

There are a variety of ways to blow the water from the bottles shown in the photo below, but which method is best? The following comparison of drilled pipe, flat air nozzles, a blower and the Super Air Knife proves that EXAIR has the best choice for your blowoff, cooling or drying application.

Our goal for each of the blowoff choices was to use the least amount of air possible to get the job done (lowest energy and noise level). Compressed air pressure required for each was 60 PSIG (4.1 BAR) which provided adequate velocity to blow the water off. The blower used had a ten horsepower electric motor and was a centrifugal type blower at 18,000 RPM. The table at the bottom of the page summarizes the overall performance. Since your actual part may have an odd configuration, holes or sharp edges, we took sound level measurements in free air (no impinging surface).



Drilled Pipe

This common blowoff is very inexpensive and easy to make. For this test, we used (2) drilled pipes, each with (25) 1/16" (1.6mm) diameter holes on 1/2" (13mm) centers. As shown in the test results below, the drilled pipe performed poorly. The initial cost of the drilled pipe is overshadowed by its high energy use. The holes are easily blocked and the noise level is excessive - both of which violate OSHA requirements. Velocity across the entire length was very inconsistent with spikes of air and numerous dead spots.

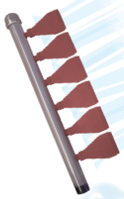

Flat Air Nozzles

As shown below, this inexpensive air nozzle was the worst performer. It is available in plastic, aluminum and stainless steel from several manufacturers. The flat air nozzle provides some entrainment, but suffers from many of the same problems as the drilled pipe. Operating cost and noise level are both high. Some manufacturers offer flat air nozzles where the holes can be blocked - an OSHA violation. Velocity was inconsistent with spikes of air.



Blower Air Knife

The blower proved to be an expensive, noisy option. As noted below, the purchase price is high. Operating cost was considerably lower than the drilled pipe and flat air nozzle, but was comparable to the EXAIR Super Air Knife. The large blower with its two 3" (76mm) diameter hoses requires significant mounting space compared to the others. Noise level was high at 90 dBA. There was no option for cycling it on and off to conserve energy like the other blowoffs. Costly bearing and filter maintenance along with downtime were also negative factors.



EXAIR Super Air Knife

The Super Air Knife pair did an exceptional job of removing the moisture on one pass due to the uniformity of the laminar airflow. The sound level was extremely low at 69 dBA. For this application, energy use was slightly higher than the blower but can be less than the blower if cycling on and off is possible. Safe operation is not an issue since the Super Air Knife cannot be dead-ended. Maintenance costs are low since there are no moving parts to wear out.

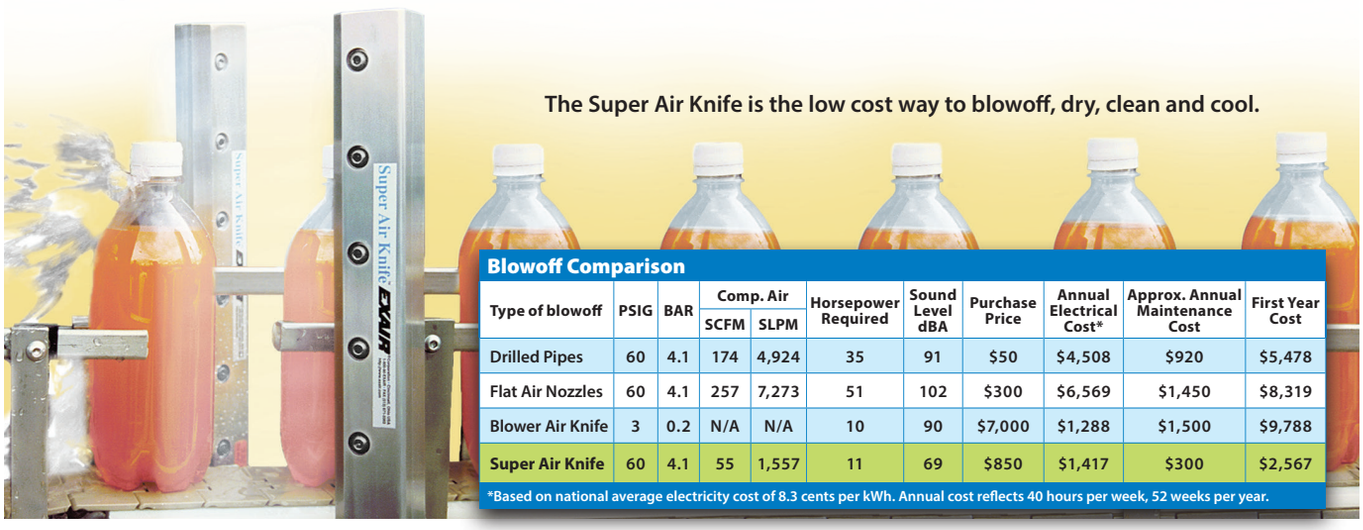

The Super Air Knife is the low cost way to blowoff, dry, clean and cool.

Blowoff Comparison

Type of blowoff	PSIG	BAR	Comp. Air SCFM	Comp. Air SLPM	Horsepower Required	Sound Level dBA	Purchase Price	Annual Electrical Cost*	Approx. Annual Maintenance Cost	First Year Cost
Drilled Pipes	60	4.1	174	4,924	35	91	$50	$4,508	$920	$5,478
Flat Air Nozzles	60	4.1	257	7,273	51	102	$300	$6,569	$1,450	$8,319
Blower Air Knife	3	0.2	N/A	N/A	10	90	$7,000	$1,288	$1,500	$9,788
Super Air Knife	60	4.1	55	1,557	11	69	$850	$1,417	$300	$2,567

*Based on national average electricity cost of 8.3 cents per kWh. Annual cost reflects 40 hours per week, 52 weeks per year.

Super Air Knife

Super Air Knife Performance with .002" (0.05mm) thick shim installed

Pressure Supply		Air Consumption per Inch (25mm)		Velocity @ 6" (152mm) from target		Sound Level @ 3' (914mm)	Force per Inch (25mm) @ 6" (152mm) from target	
PSIG	BAR	SCFM	SLPM	FPM	M/S	dBA	OUNCES	GRAMS
20	1.4	1.1	31	5,000	25.4	57	0.6	17
40	2.8	1.7	48	7,000	35.6	61	1.1	31
60	4.1	2.3	65	9,600	48.8	65	1.8	51
80	5.5	2.9	82	11,800	59.9	69	2.5	71
100	6.9	3.5	99	13,500	68.5	72	3.2	91

12" (305mm) Super Air Knife tested

Airflow Pattern

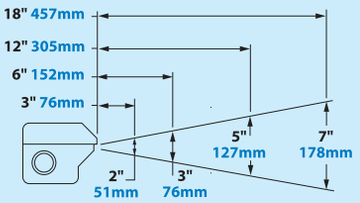

Holes Drilled In Pipe

Pressure Supply		Air Consumption 1/16" (1.59mm) dia. hole		Air Consumption 3/32" (2.38mm) dia. hole		Air Consumption 1/8" (3.18mm) dia. hole		Air Consumption 3/16" (4.76mm) dia. hole		Air Consumption 1/4" (6.35mm) dia. hole	
PSIG	BAR	SCFM	SLPM	SCFM	SLPM	SCFM	SLPM	SCFM	SLPM	SCFM	SLPM
20	1.4	1.4	40	3.5	99	6.4	181	14.5	410	25	710
40	2.8	2.2	62	5.4	153	10.2	289	22.9	648	40	1,132
60	4.1	3.0	85	7.4	209	14	396	31	877	54	1,528
80	5.5	3.8	108	9.4	266	17.5	495	39.5	1,118	69	1,953
100	6.9	4.6	130	11.5	326	21.5	609	47.5	1,344	84	2,363

Super Air Knife Specifications

The Super Air Knife is available in standard lengths of 3", 6", 9" 12", 18", 24", 30", 36", 42", 48", 54", 60", 72", 84", 96" and 108". **Special lengths and unlimited system lengths are available.** Any number of Super Air Knives may be installed across a given area.

Compressed Air Inlets: A Super Air Knife has compressed air inlets on each end and the bottom. Knives 24"-47" should use the 2 inlets at opposite ends of the knife. Knives 48"-59" use 2 inlets at opposite ends plus 1 near the middle on the bottom of the knife. Knives 60"-83" use 2 inlets at opposite ends plus 2 inlets equally spaced on the bottom of the knife. Knives 84" and longer use 2 inlets at opposite ends plus 3 inlets equally spaced on the bottom of the knife.

Filtration: The use of clean air is essential. Kits include an automatic drain filter with a 5 micron filter element that is sized properly for flow.

Materials of Construction: The Super Air Knife is available from stock in aluminum, Type 303 stainless steel, Type 316 stainless steel and PVDF. Other materials are available on special order.

Mounting: The Universal Air Knife Mounting System is shown on page 29. The Super Air Knife can be supported by the compressed air pipe. Tapped holes (1/4-20) on the bottom are also provided.

Regulation: A pressure regulator on the compressed air supply provides infinite control of flow, force and air consumption. Kits include a pressure regulator that is sized properly for flow.

Shim Sets: The compressed air exhausts through a gap which is set with a shim. Force and flow may be increased by adding shims. Shim sets for aluminum Super Air Knives include a .001" (0.03mm) ***Amber color***, ***.003" (0.08mm)***, ***Green color***, ***and .004" (0.10mm)*** thick **Tan color** plastic shims. A ***Red color*** ***.002" (0.05mm)*** thick shim comes installed in the Super Air Knife. Shim sets for stainless steel Super Air Knives include (3) .002" (0.05mm) stainless steel shims. PVDF Super Air Knife shim sets include (3) .002" (0.05mm) PTFE shims.

How To Calculate Air Savings:

The chart at the top of the page shows the air consumption of a Super Air Knife **per inch of length** (25mm) at various pressures. Comparable data is given for holes drilled in pipe.

To Determine Air Consumption for the Drilled Pipe

1. Determine the size of existing holes and supply pressure. From the chart, find air consumption per hole.
2. Multiply air consumption per hole times the number of holes to obtain total air consumption.

To Determine Air Consumption for the Super Air Knife

1. From the chart, find the air consumption per inch (25mm) at supply pressure and multiply by number of inches required.

Example:

1. Existing blowoff is 18" long pipe with 1/16" diameter holes on 1/2" spacing (37 holes), 80 PSIG supply. Air consumption from chart is 3.8 SCFM per hole. Total air consumption is 37 × 3.8 = 140.6 SCFM (3,981 SLPM).
2. Use 18" (457mm) Super Air Knife with standard .002" gap and 80 PSIG supply. Air consumption from chart is 2.9 SCFM per inch. Total air consumption is 18 × 2.9 = 52.2 SCFM (1,478 SLPM).
3. Compressed air saved = 140.6 SCFM - 52.2 SCFM = 88.4 SCFM (2,503 SLPM).
4. Most large plants know their air cost. If you don't know your actual cost, a reasonable average to use is $0.25 per 1,000 SCF (28,329 SL).
5. Dollars saved per hour = SCFM saved × 60 minutes x cost/1,000 SCF = 88.4 × 60 × $0.25/1,000
   = $1.33/hour
   = $53.20 per 40 hour week
   = $2,766.40 per year savings

EXAIR_Cat36_25_FROMINDESIGN.indb 24 12/20/24 3:46 PM

Changing Performance By Adding Shims

The Super Air Knife is shipped with a ***Red color*** ***.002" (0.05mm)*** thick shim installed, which works best for most applications. There are, however, some situations that require more force and flow. Thicker shims will increase the gap opening which offers higher velocity and harder hitting force. Air consumption and noise will be slightly higher. Shim sets are included with all kits or can be purchased separately.

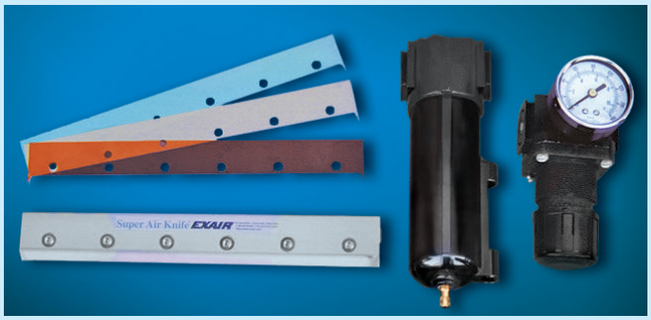

Kits include a Super Air Knife, shim set, filter separator and pressure regulator (with coupler).

Special Super Air Knives

EXAIR manufactures special Super Air Knives suited to specific application requirements. The shape, dimensions and materials of construction can be modified to fit existing machines and environments.

The curved stainless steel Super Air Knife *(shown top right)* was manufactured for a laboratory that uses the force of the airflow to hold test tubes in place on a rotating index table. They were able to eliminate the mechanical clips and latches that slowed the test tube removal. This holding method minimized risk of tube breakage and eliminated any chance of puncturing the technician's rubber gloves.

EXAIR manufactures special Super Air Knives made of plastic. These products are engineered to work under normal operating pressures, providing the same performance as their aluminum and stainless steel counterparts.

The PVC Super Air Knife *(shown 2nd from top right)* was manufactured for a picture tube plant. The softer material was less likely to scratch the picture tube surface and was chemically resistant to the phosphorus which coated the inside.

The flat Super Air Knife *(shown 3rd from top right)* is used in a molding machine for integrated circuit chips. Prior to molding the black plastic shells around the silicon wafers, they blow the mold cavity clean of any fine plastic fibers left by the previous cycle. The flat design constructed of corrosion resistant stainless steel was made to fit the tight space of the molding machine.

The double-sided Super Air Knife *(shown 2nd from bottom right)* provides two uniform sheets of air in opposite directions. It is ideal for blowing water from two or more columns of stacked parts (like printed circuit boards) as they are lifted out of a bath or the open halves of a mold. Each side operates independently.

The Super Air Knife *(shown bottom right)* can be modified to include extra mounting holes to suit your application.



A special curved stainless steel Super Air Knife holds test tubes in place on a rotating index table.



A PVC Super Air Knife designed to withstand a phosphorus environment.

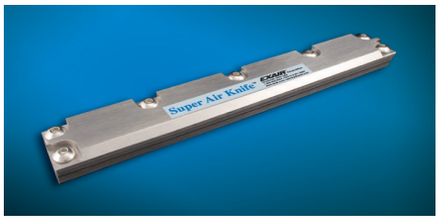

A flat Super Air Knife, only 11/16" thick, blows plastic fibers from a mold used to make integrated circuit chips.

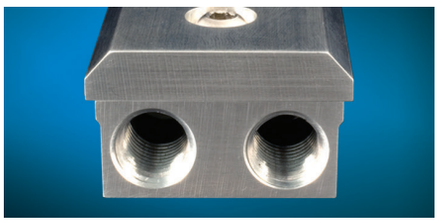

The double-sided Super Air Knife provides two uniform sheets of laminar airflow.

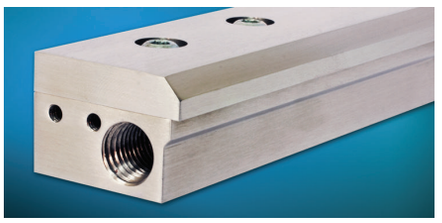

Stainless steel Super Air Knife modified to include extra mounting holes.

Super Air Knife

Many Lengths Available From Stock in Four Materials

EXAIR's Super Air Knives are available from stock in many lengths and your choice of four materials. The force, flow and air pattern stay the same for each construction.

Aluminum

The aluminum Super Air Knife is suited to a wide variety of environments where corrosion or contamination is not a factor. The aircraft grade aluminum construction with plastic shim is very durable for general purpose applications. Stainless steel screws are used to eliminate corrosion in damp locations. It can withstand temperatures up to 180°F (82°C).

Type 303 Stainless Steel

This is the most common grade of stainless steel. It offers good strength and is best suited to mildly corrosive environments. It can withstand temperatures up to 800°F (427°C).

Type 316 Stainless Steel

Some applications require better corrosion resistance than offered by Type 303 stainless steel. Type 316 stainless steel offers excellent corrosion resistance, better strength properties and resists pitting. These factors are important to manufacturers of food, pharmaceutical and surgical products that need to minimize contamination by the metal. It can withstand temperatures up to 800°F (427°C).

PVDF (Polyvinylidene Fluoride)

EXAIR's Super Air Knife is also available from stock in PVDF (Polyvinylidene Fluoride). PVDF offers superior strength and is resistant to UV light, inorganic chemicals, solvents, ozone, weather, fungi, chlorinated hydrocarbons, highly corrosive acids, weak bases and salts. The PVDF Super Air Knife uses PTFE shims, Type 316 Stainless Steel pipe plugs, and Hastelloy® C-276 alloy screws to withstand harsh environments. The PVDF Super Air Knife is suitable for manufacturing processes that involve electroplating, solar cells, lithium ion batteries, transfer of acids and caustic chemicals, brine, solvent recovery, semiconductors, and medical devices. It can withstand temperatures up to 275°F (135°C).

HASTELLOY is a registered trademark of Haynes International, Inc.



PVDF Super Air Knives provide superior corrosion resistance.

Super Air Knife Replaces Fan Cooling

The Problem: A manufacturer of automotive electronics had a problem cooling computers as they exited a wave solder machine. In order to be handled and tested, the computers had to first be cooled to 81°F (27°C). Initially, they had tried banks of 6" (152mm) diameter axial fans across the 8' (2.5m) length of the cooling conveyor. It consisted of 16 fans blowing down from the top and 16 fans blowing up from the bottom at 7" (178mm) away from the surface. After traveling the full length of the conveyor with the fans running at full force (a five minute duration), the computers were still 108°F (42°C). Quality control personnel sat with an unacceptable backlog of computers waiting to be tested.

The Solution: The company removed the top and bottom fan banks and replaced them with **(3) Model 110012 12" (305mm) Super Air Knives** that were evenly spaced across the cooling section. Each Super Air Knife was angled so the computer and heat sink received the constant rush of airflow. **With the conveyor at the same speed 1.6 FPM (0.5m/min), and Super Air Knives at only 40 PSIG (2.8 BAR), the computers were cooled to 81°F (27°C) in 90 seconds!**

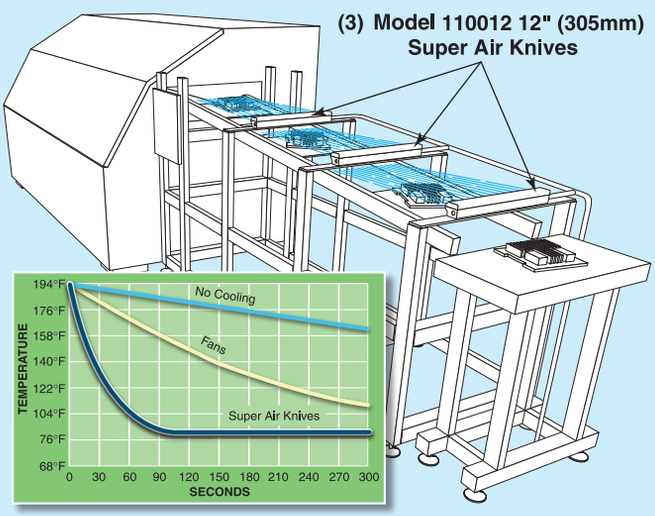

Comment: The laminar airflow of the Super Air Knives was the key to success in this application. Fan cooling could only provide random spikes of air at moderate velocities. **The uniform sheet of air from the Super Air Knife quietly swept the heat away within the first 2' (610mm) of the conveyor.** Low air consumption and the compact size of the Super Air Knife were an added bonus.

EXAIR_Cat36_25_FROMINDESIGN.indb 26 12/20/24 3:46 PM

Air Shielding a Laser Lens

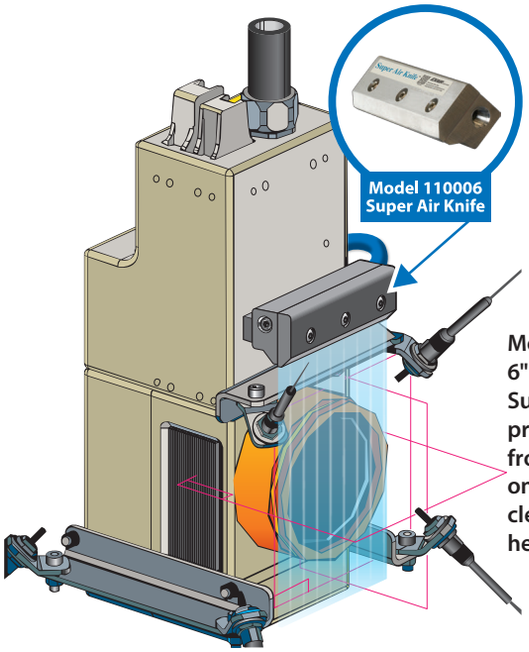

Model 110006 6" (152mm) Super Air Knife prevents debris from depositing on a laser cleaning head.

The Problem: A dirty lens can affect the quality of cameras, sensors and lasers. Today's visual inspection systems are highly accurate tools used to monitor dimensions, temperature, finish quality, labeling and much more. These products require clean lenses in order to provide the proper feedback to operators or other machinery within the process. The laser lens to the left is integral to a laser cleaning operation where a laser is used to clear away debris and provide a fresh surface. The laser cleaning operation in this case was creating debris which flew up and deposited onto the laser lens. Debris on the lens could affect the laser's cleaning quality or become burned upon the lens and create the need for a replacement lens.

The Solution: A Model 110006 6" (152mm) Super Air Knife was installed just above the laser lens to blow air down and across the lens. The sheet of air created an invisible barrier the contaminants could not penetrate and kept them from depositing onto the lens. The quality of the laser cleaning has been consistently good and the need for replacement lenses due to debris deposition has been eliminated.

Comment: An air barrier is a common application for a Super Air Knife and can create a non-contact wiper with little or no obstruction. They have been used in similar applications to prevent debris from getting to many different sensors or cameras, to retain heat within an oven, or to deflect mist from a machine tool.

Bakery Creates Clean Break In Icing

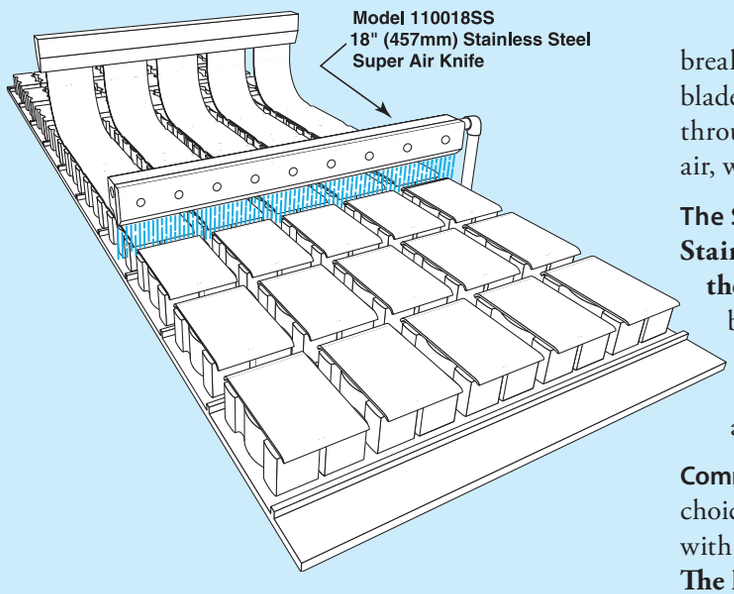

The Problem: A bakery had a problem applying the icing to their snack cakes. As the baked sponge cakes moved down the conveyor, a continuous ribbon of icing was applied to the individual cakes. Trying to make a clean break in the icing was next to impossible. Mechanical blades required constant cleaning. Compressed air through a series of holes in drilled pipe used too much air, was noisy and didn't make a clean break in the icing.

The Solution: A Model 110018SS 18" (457mm) Stainless Steel Super Air Knife was installed across the conveyor. A photo eye is used to detect the space between the cakes and turn the compressed air on at the precise moment to apply uniform airflow and velocity against the ribbon of icing, creating a nice, clean break.

Comment: The Stainless Steel Super Air Knife was the best choice for this application. Since there was no contact with the icing, no additional cleaning was required. **The laminar flow of the Super Air Knife has uniform velocity across the entire length and broke the ribbon of icing evenly.** This would never have been possible with the spikes of air from a drilled pipe, nozzles or a blower.

EXAIR_Cat36_25_FROMINDESIGN.indb 27 12/20/24 3:46 PM

Super Air Knife

Smoke Containment During Engine Test

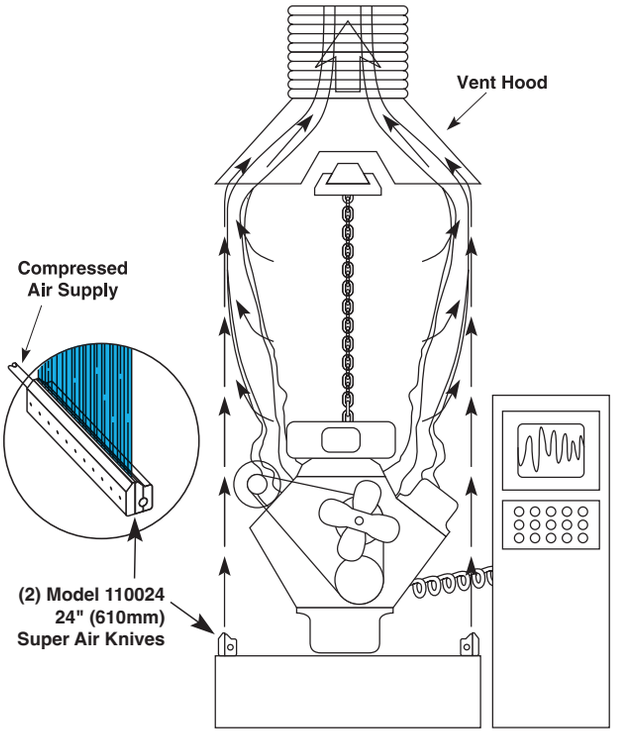

The Problem: The last step in an engine assembly process is "burn-in" on a test stand. Each engine is connected to a dynamometer and run for a period of one to five minutes. Residual machining oil on the head produced smoke during the test, and the vent hood at the top of the stand had insufficient capacity to contain it.

The Solution: A Model 110024 24" (610mm) Super Air Knife was mounted on both sides of the test stand. The sheet or "wall" of air produced by **the Super Air Knife, captured, contained and diluted the smoke while directing it towards the vent hood.** The environmental problem was solved without obstructing the technician's observation of, or access to the stand.

Comment: The use of the Super Air Knife for containment and separation is becoming increasingly common. The advantage, as illustrated here, is the ability of the Super Air Knife to create a screen or barrier with no obstruction. Other typical applications in this mode are:

- Retaining heat in curing and drying ovens
- Protecting workers from coolant splatter
- Isolating industrial camera lenses from airborne contaminants

Drying Crates Following a Washing Operation

The Problem: A bottling plant places their filled bottles into plastic crates as a final step of their process. When the empty plastic crates are returned from the various retail markets, they must first be washed and sanitized prior to using them again. When the bottler put the crates through the washer, they exited the final rinse dripping wet. Bottles placed in the wet crates were eventually covered with water spots and many product labels were ruined.

The Solution: The company installed (3) **Model 110018 18" (457mm) Super Air Knives** to completely surround and blowoff the crates. Each Super Air Knife was placed on an angle with the sheet of air blowing against the travel of the crates and directing the water downward toward the floor. The crates were dried and the bottles could be loaded immediately.

Comment: Super Air Knives were the best choice for this application. The uniform sheet of laminar airflow provided complete coverage so there were no dead spots when blowing across the inside and outside surfaces of the crate. The mounting used made it easy to rearrange and adjust the Super Air Knife depending on the size of the crate. Other companies have used a similar arrangement of the Super Air Knives to blowoff car batteries, blocks of cheese, milk cartons, buckets, and more.



Three Model 110018 18" (457mm) Super Air Knives completely surround and blowoff crates so they can be loaded immediately.

EXAIR_Cat36_25_FROMINDESIGN.indb 28 12/20/24 3:46 PM

Universal Air Knife Mounting System

Provide Precise Positioning For Your Air Knife!

The Model 9060 Universal Air Knife Mounting System is used to provide secure, precise positioning for any of the EXAIR Air Knives. The Air Knife can quickly and easily be moved within close proximity of the part to improve effectiveness. It can be mounted on the top or bottom of most Air Knives (Super, Standard and Full-Flow Air Knives). The Mounting System has a durable, stainless steel construction that is suitable for a variety of industrial applications.



Model 9060 Universal Air Knife Mounting System

The mounting system can also be used with EXAIR Static Eliminators. For the Gen4 Super Ion Air Knife, it can be mounted on the top. Bottom mounting is possible on Gen4 Super Ion Air Knives that are 18" or longer. For the Gen4 Standard Ion Air Knife, it can be top mounted on any length. Bottom mounting is possible on Gen4 Standard Ion Air Knives that are 9" or longer.

Air Knife Mounting System	
Model #	**Description**
9060	Universal Air Knife Mounting System

The Mounting System can be articulated into any position and provides a maximum extension of 30". A 1/2" diameter hole is required for mounting. Alternatively, the bolt can be threaded directly into a 1/2"-13 tapped hole. For any style Air Knife that is 24" to 54", use (2) Universal Air Knife Mounting Systems. For knives 55" - 71", use (3). For 72" - 95", use (4). For knives 96" and over, use (5).

Air Knife Plumbing Kits

Super Air Knives that are 24" or longer must be supplied with compressed air at multiple inlets on the Air Knife. EXAIR's Air Knife Plumbing Kits make it easy to ensure proper airflow to each inlet. They provide properly sized compressed air hose or pipe and fittings to interconnect the bottom or end compressed air inlets for best performance. Plumbing kits for aluminum Super Air Knives include a pressure gauge to monitor pressure at the Super Air Knife, which is an indication of proper air supply. They also include nitrile/PVC hose and brass fittings. Plumbing kits for stainless steel Super Air Knives include cut to length type 316 stainless steel pipe and fittings and will also work on PVDF Super Air Knives.



Model 9076, 9077, 9078 and 9079 Plumbing Kits work with Aluminum Super Air Knives and provide the hose and fittings to couple the inlets for best performance.

Plumbing Kits for Aluminum Super Air Knives	
Model #	**Description**
9076	Air Knife Plumbing Kit - for lengths up to 42" (1067mm)
9077	Air Knife Plumbing Kit - for lengths 48" - 54" (1219 - 1372mm)
9078	Air Knife Plumbing Kit - for lengths 60" - 84" (1524 - 2134mm)
9079	Air Knife Plumbing Kit - for lengths 90" - 108" (2286 - 2743mm)



Stainless Steel Plumbing Kits work with Stainless Steel Super Air Knives and provide the pipe and fittings to couple the inlets for best performance.

Plumbing Kits for Stainless Steel and PVDF Super Air Knives			
Model #	**Description**	**Model #**	**Description**
9240	For 24" (610mm) length	**9246**	For 60" (1524mm) length
9241	For 30" (762mm) length	**9247**	For 72" (1829mm) length
9242	For 36" (914mm) length	**9248**	For 84" (2134mm) length
9243	For 42" (1067mm) length	**9249**	For 96" (2438mm) length
9244	For 48" (1219mm) length	**9250**	For 108" (2743mm) length
9245	For 54" (1372mm) length		

Coupling Bracket Kits

Some applications require a Super Air Knife that is longer than our 108" (2743mm) length. Coupling Bracket Kits that join two Super Air Knives together are available. The kit includes two rigid plates along with the assembly screws. The bottom plate is supplied with a hole to access the bottom compressed air inlets. All models include stainless steel screws.

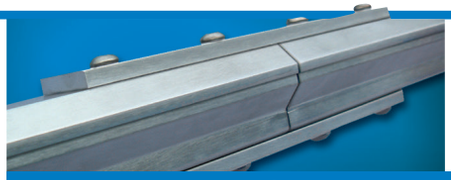

The Model 110900 Coupling Bracket Kit is used to join two aluminum Super Air Knives.

Air Knife Coupling Bracket Kit	
Model #	**Description**
110900	Aluminum Coupling Bracket Kit
110900SS	Type 303 Stainless Steel Coupling Bracket Kit
110900SS-316	Type 316 Stainless Steel Coupling Bracket Kit

EXAIR_Cat36_25_FROMINDESIGN.indb 29 12/20/24 3:46 PM

Super Air Knife

Aluminum Super Air Knife Dimensions

DOWNLOAD drawings at EXAIR.com

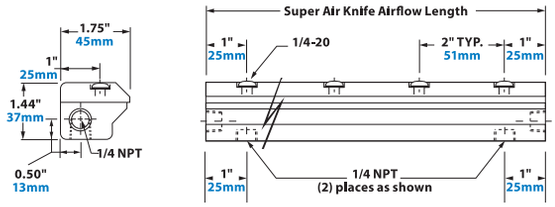



ONE PIECE CONSTRUCTION

Super Air Knife Only				
Airflow Length	Aluminum Model	Type 303SS Model	Type 316SS Model	PVDF Model
3" (76mm)	110003	110003SS	110003SS-316	110003-PVDF
6" (152mm)	110006	110006SS	110006SS-316	110006-PVDF
9" (229mm)	110009	110009SS	110009SS-316	110009-PVDF
12" (305mm)	110012	110012SS	110012SS-316	110012-PVDF
18" (457mm)	110018	110018SS	110018SS-316	110018-PVDF
24" (610mm)	110024	110024SS	110024SS-316	110024-PVDF
30" (762mm)	110030	110030SS	110030SS-316	110030-PVDF
36" (914mm)	110036	110036SS	110036SS-316	110036-PVDF
42" (1067mm)	110042	110042SS	110042SS-316	110042-PVDF
48" (1219mm)	110048	110048SS	110048SS-316	110048-PVDF
54" (1372mm)	110054	110054SS	110054SS-316	110054-PVDF
60" (1524mm)	110060	110060SS	110060SS-316	N/A
72" (1829mm)	110072	110072SS	110072SS-316	N/A
84" (2134mm)	110084	110084SS	110084SS-316	N/A
96" (2438mm)	110096	110096SS	110096SS-316	N/A
108" (2743mm)	1100108	1100108SS	1100108SS-316	N/A

Type 303 and 316 Stainless Steel Super Air Knife Dimensions

DOWNLOAD drawings at EXAIR.com

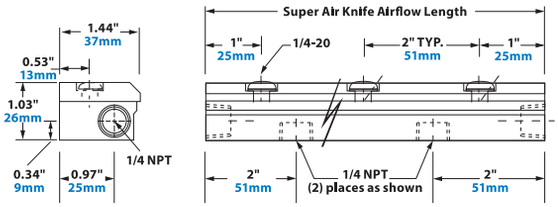

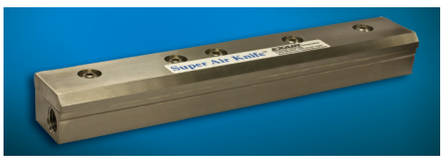

ONE PIECE CONSTRUCTION

Super Air Knife Kits				
Kits include a Super Air Knife, shim set, filter separator and pressure regulator (with coupler).				
Airflow Length	Aluminum Model	Type 303SS Model	Type 316SS Model	PVDF Model
3" (76mm)	110203	110203SS	110203SS-316	110203-PVDF
6" (152mm)	110206	110206SS	110206SS-316	110206-PVDF
9" (229mm)	110209	110209SS	110209SS-316	110209-PVDF
12" (305mm)	110212	110212SS	110212SS-316	110212-PVDF
18" (457mm)	110218	110218SS	110218SS-316	110218-PVDF
24" (610mm)	110224	110224SS	110224SS-316	110224-PVDF
30" (762mm)	110230	110230SS	110230SS-316	110230-PVDF
36" (914mm)	110236	110236SS	110236SS-316	110236-PVDF
42" (1067mm)	110242	110242SS	110242SS-316	110242-PVDF
48" (1219mm)	110248	110248SS	110248SS-316	110248-PVDF
54" (1372mm)	110254	110254SS	110254SS-316	110254-PVDF
60" (1524mm)	110260	110260SS	110260SS-316	N/A
72" (1829mm)	110272	110272SS	110272SS-316	N/A
84" (2134mm)	110284	110284SS	110284SS-316	N/A
96" (2438mm)	110296	110296SS	110296SS-316	N/A
108" (2743mm)	1102108	1102108SS	1102108SS-316	N/A

PVDF Super Air Knife Dimensions

DOWNLOAD drawings at EXAIR.com

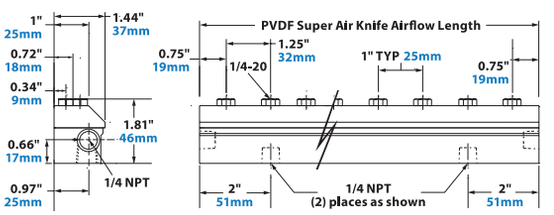



ONE PIECE CONSTRUCTION

Deluxe Super Air Knife Kits				
Kits include a Super Air Knife, EFC, Universal Mounting System, shim set, filter separator and pressure regulator (with coupler).				
Airflow Length	Aluminum Model	Type 303SS Model	Type 316SS Model	PVDF Model
3" (76mm)	110203DX	110203SSDX	110203SSDX-316	N/A
6" (152mm)	110206DX	110206SSDX	110206SSDX-316	N/A
9" (229mm)	110209DX	110209SSDX	110209SSDX-316	N/A
12" (305mm)	110212DX	110212SSDX	110212SSDX-316	N/A
18" (457mm)	110218DX	110218SSDX	110218SSDX-316	N/A
24" (610mm)	110224DX	110224SSDX	110224SSDX-316	N/A
30" (762mm)	110230DX	110230SSDX	110230SSDX-316	N/A
36" (914mm)	110236DX	110236SSDX	110236SSDX-316	N/A
42" (1067mm)	110242DX	110242SSDX	110242SSDX-316	N/A
48" (1219mm)	110248DX	110248SSDX	110248SSDX-316	N/A
54" (1372mm)	110254DX	110254SSDX	110254SSDX-316	N/A
60" (1524mm)	110260DX	110260SSDX	110260SSDX-316	N/A
72" (1829mm)	110272DX	110272SSDX	110272SSDX-316	N/A
84" (2134mm)	110284DX	110284SSDX	110284SSDX-316	N/A
96" (2438mm)	110296DX	110296SSDX	110296SSDX-316	N/A
108" (2743mm)	1102108DX	1102108SSDX	1102108SSDX-316	N/A

For Technical Assistance, Call an EXAIR Application Engineer 1-800-903-9247
Toll Free FAX (866) 329-3924 • E-mail: techelp@exair.com • www.exair.com

EXAIR_Cat36_25_FROMINDESIGN.indb 30 12/20/24 3:46 PM

Super Air Knife Shim Sets

Shim sets for aluminum Super Air Knives include a .001" (0.03mm) ***Amber color***, .003" (0.08mm) ***Green color***, and .004" (0.10mm) thick ***Tan color*** plastic shim. A ***Red color*** .002" (0.05mm) thick shim comes installed in the Super Air Knife. Shim sets for stainless steel Super Air Knives include (3) .002" (0.05mm) thick stainless steel shims. PVDF Super Air Knife shim sets include (3) .002" (0.05mm) PTFE shims.

Airflow Length	Aluminum Model	Type 303SS Model	Type 316SS Model	PVDF Model
3" (76mm)	110303	110303SS	110303SS-316	110303-PVDF
6" (152mm)	110306	110306SS	110306SS-316	110306-PVDF
9" (229mm)	110309	110309SS	110309SS-316	110309-PVDF
12" (305mm)	110312	110312SS	110312SS-316	110312-PVDF
18" (457mm)	110318	110318SS	110318SS-316	110318-PVDF
24" (610mm)	110324	110324SS	110324SS-316	110324-PVDF
30" (762mm)	110330	110330SS	110330SS-316	110330-PVDF
36" (914mm)	110336	110336SS	110336SS-316	110336-PVDF
42" (1067mm)	110342	110342SS	110342SS-316	110342-PVDF
48" (1219mm)	110348	110348SS	110348SS-316	110348-PVDF
54" (1372mm)	110354	110354SS	110354SS-316	110354-PVDF
60" (1524mm)	110360	110360SS	110360SS-316	N/A
72" (1829mm)	110372	110372SS	110372SS-316	N/A
84" (2134mm)	110384	110384SS	110384SS-316	N/A
96" (2438mm)	110396	110396SS	110396SS-316	N/A
108" (2743mm)	1103108	1103108SS	1103108SS-316	N/A

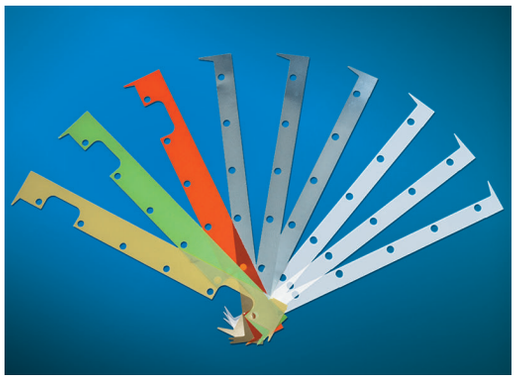

Force and flow can be increased by installing additional shims that open the air gap.

Special length Super Air Knives are available. Magnetic bases with Stay Set™ flexible hoses are also available for smaller Super Air Knives. Please contact our factory.

Super Air Knives with Plumbing Kits Installed



EXAIR offers Super Air Knives in lengths from 24" (610mm) through 108" (2743mm) with Plumbing Kits that are shipped fully assembled. All components have been properly sized to obtain the best performance from the Super Air Knife.

Super Air Knife with Plumbing Kit

Super Air Knife with Plumbing Kit installed.

Airflow Length	Aluminum Model	Type 303SS Model	Type 316SS Model
24" (610mm)	110024PKI	110024SSPKI	110024SS-316PKI
30" (762mm)	110030PKI	110030SSPKI	110030SS-316PKI
36" (914mm)	110036PKI	110036SSPKI	110036SS-316PKI
42" (1067mm)	110042PKI	110042SSPKI	110042SS-316PKI
48" (1219mm)	110048PKI	110048SSPKI	110048SS-316PKI
54" (1372mm)	110054PKI	110054SSPKI	110054SS-316PKI
60" (1524mm)	110060PKI	110060SSPKI	110060SS-316PKI
72" (1829mm)	110072PKI	110072SSPKI	110072SS-316PKI
84" (2134mm)	110084PKI	110084SSPKI	110084SS-316PKI
96" (2438mm)	110096PKI	110096SSPKI	110096SS-316PKI
108" (2743mm)	1100108PKI	1100108SSPKI	1100108SS-316PKI

Super Air Knife Kit with Plumbing Kit

Super Air Knife Kit with Plumbing Kit installed.

Airflow Length	Aluminum Model	Type 303SS Model	Type 316SS Model
24" (610mm)	110224PKI	110224SSPKI	110224SS-316PKI
30" (762mm)	110230PKI	110230SSPKI	110230SS-316PKI
36" (914mm)	110236PKI	110236SSPKI	110236SS-316PKI
42" (1067mm)	110242PKI	110242SSPKI	110242SS-316PKI
48" (1219mm)	110248PKI	110248SSPKI	110248SS-316PKI
54" (1372mm)	110254PKI	110254SSPKI	110254SS-316PKI
60" (1524mm)	110260PKI	110260SSPKI	110260SS-316PKI
72" (1829mm)	110272PKI	110272SSPKI	110272SS-316PKI
84" (2134mm)	110284PKI	110284SSPKI	110284SS-316PKI
96" (2438mm)	110296PKI	110296SSPKI	110296SS-316PKI
108" (2743mm)	1102108PKI	1102108SSPKI	1102108SS-316PKI

EXAIR_Cat36_25_FROMINDESIGN.indb 31 12/20/24 3:46 PM

Super Air Knife

Accessories			
Model #	Description	Model #	Description
9001	Auto Drain Filter Separator, 3/8 NPT, 65 SCFM (1,841 SLPM)	9067	Pressure Regulator, 1-1/4 NPT, 700 SCFM (19,822 SLPM)
9032	Auto Drain Filter Separator, 1/2 NPT, 90 SCFM (2,549 SLPM)	9020	Solenoid Valve, 120V, 50/60Hz, 1/4 NPT, 40 SCFM (1,133 SLPM)
9002	Auto Drain Filter Separator, 3/4 NPT, 220 SCFM (6,230 SLPM)	9034	NEMA 4/4X Solenoid Valve, 120V, 50/60Hz, 1/2 NPT, 100 SCFM (2,832 SLPM)
9066	Auto Drain Filter Separator, 1-1/4 NPT, 400 SCFM (11,327 SLPM)	9036	NEMA 4/4X Solenoid Valve, 120V, 50/60Hz, 3/4 NPT, 200 SCFM (5,664 SLPM)
9005	Oil Removal Filter, 3/8 NPT, 15-37 SCFM (425-1,048 SLPM)	9065	NEMA 4/4X Solenoid Valve, 24VDC, 1 NPT, 350 SCFM (9,911 SLPM)
9006	Oil Removal Filter, 3/4 NPT, 50-150 SCFM (1,416-4,248 SLPM)	9060	Universal Air Knife Mounting System
9010	Oil Removal Filter, 1-1/2 NPT, 130-310 SCFM (3,679-8,773 SLPM)	110900	Aluminum Coupling Bracket Kit
9008	Pressure Regulator, 1/4 NPT, 50 SCFM (1,416 SLPM)	110900SS	Type 303 Stainless Steel Coupling Bracket Kit
9033	Pressure Regulator, 1/2 NPT, 100 SCFM (2,832 SLPM)	110900SS-316	Type 316 Stainless Steel Coupling Bracket Kit
9009	Pressure Regulator, 3/4 NPT, 220 SCFM (6,230 SLPM)		

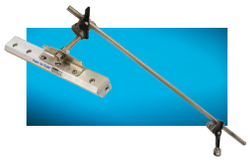

EXAIR's Universal Air Knife Mounting System allows for easy positioning of all EXAIR Air Knives. See page 29 for details.



EXAIR's Plumbing Kits provide properly sized compressed air hose or pipe, and fittings to eliminate pressure loss and provide peak performance. See page 29 and 31 for details.

Which Air Knife Is Best For Your Application?

EXAIR manufactures the Super Air Knife, Standard Air Knife and Full-Flow Air Knife. The table below provides a quick comparison of the three styles.

The Super Air Knife provides the best performance with a 40:1 air amplification ratio, making it the most efficient. It is the best choice for all applications. The Super Air Knife has a laminar airstream that is uniform, forceful and quiet. Velocity is the highest of all three air knives. Air consumption is lowest of all three air knives. Compressed air inlets are provided on each end and on the bottom. Multiple Super Air Knives can be mounted "end to end" for longer lengths of uninterrupted airflow.

The Standard Air Knife provides good performance with a 30:1 air amplification ratio that is less efficient than the Super Air Knife. It is a good choice when a less expensive alternative is required. The Standard Air Knife has an airflow that is also uniform and forceful. It is louder and uses more compressed air than the Super Air Knife. Compressed air inlets are provided on each end. Overall length is 1" (25mm) longer than the airflow length.

The Full-Flow Air Knife provides good performance with a 30:1 air amplification ratio. The Full-Flow Air Knife is the least expensive and is a good choice for tight spaces. Force is less than the other two styles. Air consumption and sound level falls between that of the Super Air Knife and the Standard Air Knife. Compressed air inlet(s) are provided on the rear. Inlets are available on each end at a small additional charge, however they are not recommended for applications where uniform flow across the length is required.

	Air Consumption		Velocity		Force per Inch (25mm)		Sound Level	Amp.
	SCFM	SLPM	FPM	M/S	Ozs	Grams	dBA	RATIO
6" (152mm) Super Air Knife	17.4	492	11,800	59.9	2.5	71	69	40:1
6" (152mm) Standard Air Knife	20.4	577	11,000	55.9	2.7	77	83	30:1
6" (152mm) Full-Flow Air Knife	18.6	526	10,000	50.8	2.3	65	80	30:1

Velocity and force measured at 6" (152mm) from target. Sound level measured at 3' (914mm).
All measurements taken at 80 PSIG (5.5 BAR).



Super Air Knife?
Standard Air Knife?
Full-Flow Air Knife?

Super Air Knife *(shown left)*
Standard Air Knife *(shown middle)*
Full-Flow Air Knife *(shown right)*

Super Air Knife

- Best choice for all applications
- Lowest operating cost
- Highest efficiency (saves most air)
- Quietest
- 40:1 air amplification ratio
- Compressed air inlets on each end and the bottom
- Airflow length and overall length are the same

Standard Air Knife

- Good choice, lower purchase price
- Highest operating cost of the three
- Good velocity
- Higher dBA rating
- Compressed air inlets on each end
- Overall length is 1" (25mm) longer than the airflow length

Full-Flow Air Knife

- Good choice, lowest purchase price
- Higher operating cost than the Super Air Knife
- Smallest size
- Airflow length and overall length are the same

EXAIR_Cat36_25_FROMINDESIGN.indb 32 12/20/24 3:46 PM

Standard Air Knife™

Hard hitting curtain of air for web, sheet and part blowoff.



What Is The Standard Air Knife?

A quiet, energy efficient way to clean, dry or cool parts, webs or conveyors. The Standard Air Knife utilizes the Coanda effect (wall attachment of a high velocity fluid) to create air motion in its surroundings. Using a small amount of compressed air as a power source, the Standard Air Knife pulls in large volumes of surrounding air to produce a high flow, high velocity curtain of air for blowoff.



Built to Last 5 yr. WARRANTY
See our Terms & Conditions page for complete details.

Why The Standard Air Knife?

Amplification ratios (entrained air to compressed air) of 30:1 are achieved with the Standard Air Knife, compared to 3:1 for drilled or slotted pipe. **Air savings of 40% to 90%** are possible when replacing these "homemade" blowoff devices. Pay-back is normally measured in weeks, not months or years.

The Standard Air Knife dramatically reduces "wind shear" by gradually introducing the entrained air to the ejected compressed air. **Noise level is typically cut in half.** The result is a high velocity, high volume sheet of air with reduced noise level and air consumption.

Drilled pipe or open jets, by contrast, provide minimal air amplification. They also produce unacceptably high noise levels as the compressed air shears into the still air.

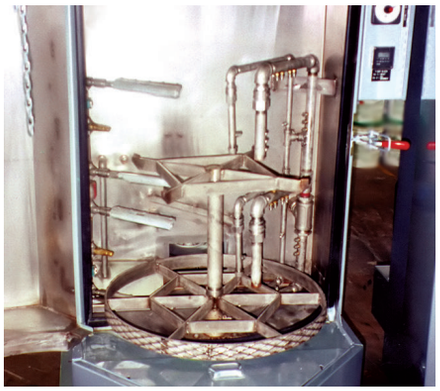

(3) Model 2012 12" (305mm) Standard Air Knives perform the drying cycle in this parts washer.

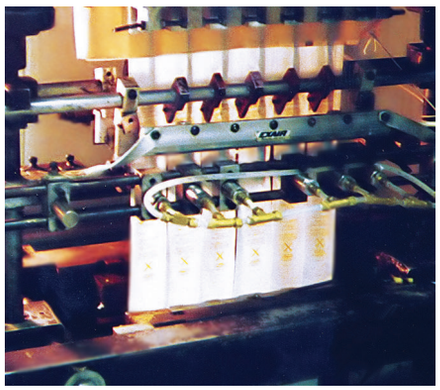

A Model 2012 12" (305mm) Standard Air Knife opens mustard packets prior to fill.

Applications

- Part drying after wash
- Sheet cleaning in strip mills
- Conveyor cleaning
- Web drying or cleaning
- Part or component cooling
- Environmental separation
- Pre-paint blowoff
- Bag opening/fill operations
- Scrap removal on converting operations

Advantages

- Up to 10 dBA noise reduction
- Reduced air consumption
- 30:1 air amplification
- Aluminum or stainless steel
- Compact, rugged, easy to install
- Stock lengths to 48" (1219mm)
- No moving parts
- Compressed air inlets on each end
- Variable force and flow

? Is the Standard Air Knife best for your application? see page 32

EXAIR_Cat36_25_FROMINDESIGN.indb 33 12/20/24 3:46 PM

Standard Air Knife

How The Standard Air Knife Works

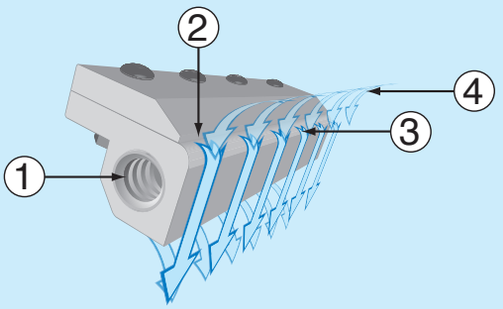

Compressed air flows through the inlet (1) into a plenum chamber. It is then throttled through a thin nozzle (2) extending the length of the Standard Air Knife. This primary airstream adheres to the Coanda profile (3), which turns it 90° and directs the flow down the face of the unit. The primary stream immediately begins to entrain surrounding air (4), for an amplification ratio of 30:1 at 6" (152mm) away.

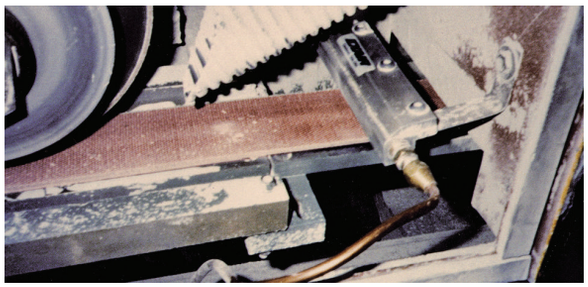

A Model 2006 6" (152mm) Standard Air Knife blows powder loose from a belt so it can be vacuumed away.

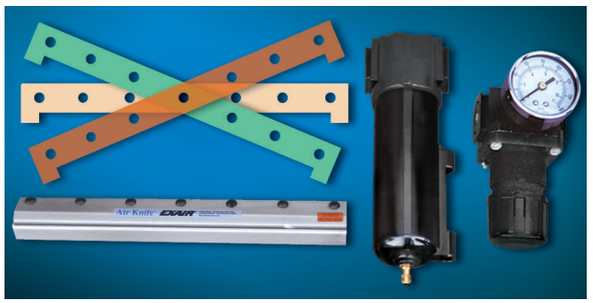

Kits include a Standard Air Knife, shim set, filter separator, and pressure regulator (with coupler).

Standard Air Knife Specifications

The Standard Air Knife is available in ten standard lengths of 3", 6", 9", 12", 18", 24", 30", 36", 42" and 48" (76, 152, 229, 305, 457, 610, 762, 914, 1067 and 1219mm). This measurement refers to the airflow length. The overall length is 1" (25mm) longer. **Special lengths up to 48" (1219mm) are available.** Any number of Standard Air Knives may be installed across a given area.

Compressed Air Inlets: A Standard Air Knife has compressed air inlets on each end. Lengths 24" (610mm) and longer should be supplied with compressed air at each end to maintain uniform airflow.

Filtration: The use of clean air is essential. Kits include an automatic drain filter with a 5 micron filter element that is sized properly for flow.

Materials of Construction: The Standard Air Knife is available in either aluminum or stainless steel construction.

Mounting: See page 29 for complete details on the Universal Air Knife Mounting System. The Standard Air Knife can also be supported by the compressed air pipe.

Regulation: A pressure regulator on the compressed air supply provides infinite control of flow, force, and air consumption. Kits include a pressure regulator that is sized properly for flow.

Shim Sets: A Standard Air Knife has a .002" (0.05mm) gap setting. This gap is set with a shim positioned between the cap and body of the Standard Air Knife. Force and flow through the Standard Air Knife may be easily increased by adding shims to open the gap. Standard Air Knife Kits include a shim set (three additional shims). Shim sets for aluminum Standard Air Knives include a .001" (0.03mm) Amber color, .003" (0.08mm) Green color, and .004" (0.10mm) thick Tan color plastic shims. Shim sets for stainless steel Standard Air Knives include (3) .002" (0.05mm) thick stainless steel shims.

Standard Air Knife Performance with .002" (0.05mm) thick shim installed

Pressure Supply		Air Consumption per Inch (25mm)		Velocity @ 6" (152mm) from target		Sound Level @ 3' (914mm)	Force per Inch (25mm) @ 6" (152mm) from target	
PSIG	BAR	SCFM	SLPM	FPM	M/S	dBA	Ozs	Grams
20	1.4	1.3	37	4,000	20.3	65	0.45	13
40	2.8	2.0	57	5,800	29.5	74	1.1	31
60	4.1	2.7	76	8,500	43.2	80	2.0	57
80	5.5	3.4	96	11,000	55.9	83	2.7	77
100	6.9	4.1	116	13,000	66.0	86	3.3	94

12" (305mm) Standard Air Knife tested

EXAIR_Cat36_25_FROMINDESIGN.indb 34 12/20/24 3:46 PM

Standard Air Knife Dimensions

DOWNLOAD drawings at EXAIR.com

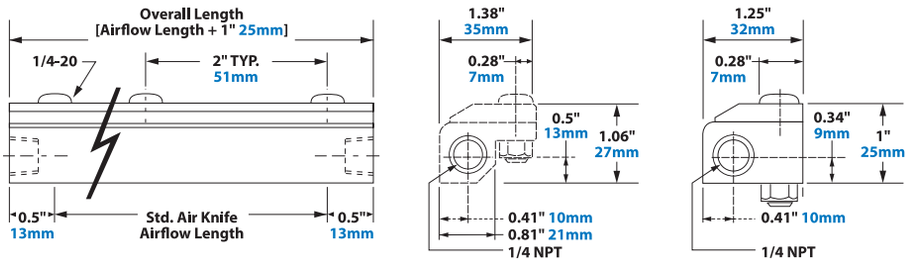

Airflow Pattern

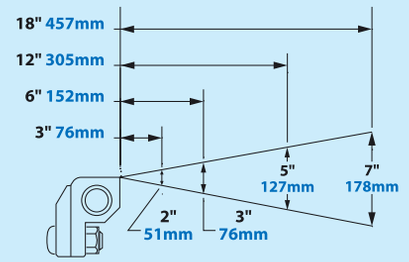

Universal Air Knife Mounting System



EXAIR's Universal Air Knife Mounting System allows for easy positioning of all EXAIR Air Knives.
See page 29 for details.

Special length Standard Air Knives are available. Magnetic bases with Stay Set™ flexible hoses are also available for smaller Standard Air Knives. Please contact our factory.

ORDER ONLINE at EXAIR.com

Standard Air Knife Only

Airflow Length	Aluminum Model	Type 303SS Model
3" (76mm)	2003	2003SS
6" (152mm)	2006	2006SS
9" (229mm)	2009	2009SS
12" (305mm)	2012	2012SS
18" (457mm)	2018	2018SS
24" (610mm)	2024	2024SS
30" (762mm)	2030	2030SS
36" (914mm)	2036	2036SS
42" (1067mm)	2042	2042SS
48" (1219mm)	2048	2048SS

Standard Air Knife Kits

Kits include a Standard Air Knife, shim set, filter separator and pressure regulator (with coupler).

Airflow Length	Aluminum Model	Type 303SS Model
3" (76mm)	2203	2203SS
6" (152mm)	2206	2206SS
9" (229mm)	2209	2209SS
12" (305mm)	2212	2212SS
18" (457mm)	2218	2218SS
24" (610mm)	2224	2224SS
30" (762mm)	2230	2230SS
36" (914mm)	2236	2236SS
42" (1067mm)	2242	2242SS
48" (1219mm)	2248	2248SS

Accessories

Model #	Description
9001	Auto Drain Filter Separator, 3/8 NPT, 65 SCFM (1,841 SLPM)
9032	Auto Drain Filter Separator, 1/2 NPT, 90 SCFM (2,549 SLPM)
9002	Auto Drain Filter Separator, 3/4 NPT, 220 SCFM (6,230 SLPM)
9066	Auto Drain Filter Separator, 1-1/4 NPT, 400 SCFM (11,327 SLPM)
9005	Oil Removal Filter, 3/8 NPT, 15-37 SCFM (425-1,048 SLPM)
9006	Oil Removal Filter, 3/4 NPT, 50-150 SCFM (1,416-4,248 SLPM)
9010	Oil Removal Filter, 1-1/2 NPT, 130-310 SCFM (3,679-8,773 SLPM)
9008	Pressure Regulator, 1/4 NPT, 50 SCFM (1,416 SLPM)
9033	Pressure Regulator, 1/2 NPT, 100 SCFM (2,832 SLPM)
9009	Pressure Regulator, 3/4 NPT, 220 SCFM (6,230 SLPM)
9067	Pressure Regulator, 1-1/4 NPT, 700 SCFM (19,822 SLPM)
9020	Solenoid Valve, 120V, 50/60Hz, 1/4 NPT, 40 SCFM (1,133 SLPM)
9034	NEMA 4/4X Solenoid Valve, 120V, 50/60Hz, 1/2 NPT, 100 SCFM (2,832 SLPM)
9036	NEMA 4/4X Solenoid Valve, 120V, 50/60Hz, 3/4 NPT, 200 SCFM (5,664 SLPM)
9065	NEMA 4/4X Solenoid Valve, 24VDC, 1 NPT, 350 SCFM (9,911 SLPM)

Deluxe Standard Air Knife Kits

Kits include a Standard Air Knife, EFC, Universal Mounting System, shim set, filter separator and pressure regulator (with coupler).

Airflow Length	Aluminum Model	Type 303SS Model
3" (76mm)	2203DX	2203SSDX
6" (152mm)	2206DX	2206SSDX
9" (229mm)	2209DX	2209SSDX
12" (305mm)	2212DX	2212SSDX
18" (457mm)	2218DX	2218SSDX
24" (610mm)	2224DX	2224SSDX
30" (762mm)	2230DX	2230SSDX
36" (914mm)	2236DX	2236SSDX
42" (1067mm)	2242DX	2242SSDX
48" (1219mm)	2248DX	2248SSDX

Standard Air Knife Shim Sets

Shim Sets include (1) each of a .001" (0.03mm), .003" (0.08mm) and .004" (0.10mm) plastic shim. Stainless steel shim sets include (3) .002" (0.05mm) shims.

Airflow Length	Aluminum Model	Type 303SS Model
3" (76mm)	2303	2303SS
6" (152mm)	2306	2306SS
9" (229mm)	2309	2309SS
12" (305mm)	2312	2312SS
18" (457mm)	2318	2318SS
24" (610mm)	2324	2324SS
30" (762mm)	2330	2330SS
36" (914mm)	2336	2336SS
42" (1067mm)	2342	2342SS
48" (1219mm)	2348	2348SS

EXAIR_Cat36_25_FROMINDESIGN.indb 35 12/20/24 3:46 PM

Full-Flow Air Knife™

This low cost choice provides a curtain of air for blowoff, cleaning, drying and cooling.



What Is The Full-Flow Air Knife?

EXAIR's Full-Flow Air Knife is an effective way to clean, dry or cool parts, webs or conveyors. It utilizes the Coanda effect to pull in large volumes of surrounding air, producing a high flow, high velocity curtain of air. The "Full-Flow" provides airflow across the entire length. A 12" (305mm) Full-Flow Air Knife measures 12" (305mm). It has the compressed air inlet(s) on the rear.



Full-Flow Air Knife Specifications

The Full-Flow Air Knife is available in eight standard lengths of 3", 6", 9", 12", 18", 24", 30" and 36" (76, 152, 229, 305, 457, 610, 762 and 914mm). **Special lengths up to 36" (914mm) and unlimited system lengths are available.**

Compressed Air Inlet(s): A Full-Flow Air Knife has the compressed air inlet(s) on the rear. Inlets are available on each end at a small additional charge, however, they are not recommended for applications where uniform airflow across the length is required.

Filtration: The use of clean air is essential. Kits include an automatic drain filter with a 5 micron filter element that is sized properly for flow.

Materials of Construction: The Full-Flow Air Knife is available in either aluminum or stainless steel construction.

Mounting: See page 29 for complete details on the Universal Air Knife Mounting System. The Full-Flow Air Knife can also be supported by the compressed air pipe.

Regulation: A pressure regulator on the compressed air supply provides infinite control of flow, force, and air consumption. Kits include a pressure regulator that is sized properly for flow.

Shim Sets: A Full-Flow Air Knife has a .002" (0.05mm) gap setting. This gap is set with a shim positioned between the cap and body of the Full-Flow Air Knife. Force and flow through the Full-Flow Air Knife may be easily increased by adding shims to open the gap. Kits include a shim set. Shim sets for aluminum Full-Flow Air Knives include a ***.001" (0.03mm) Amber color*** ▮, ***.003" (0.08mm) Green color*** ▮, and ***.004" (0.10mm) Tan color*** ▮ plastic shims. Shim sets for stainless steel Full-Flow Air Knives include (1) .002" (0.05mm) thick stainless steel shim.



Kits include a Full-Flow Air Knife, shim set, filter separator and pressure regulator (with coupler).

Is the Full-Flow Air Knife best for your application?
see page 32

Full-Flow Air Knife Performance with .002" (0.05mm) thick shim installed

Pressure Supply		Air Consumption per Inch (25mm)		Velocity @ 6" (152mm) from target		Sound Level @ 3' (914mm)	Force per Inch (25mm) @ 6" (152mm) from target	
PSIG	BAR	SCFM	SLPM	FPM	M/S	dBA	Ozs	Grams
20	1.4	1.1	31	3,000	15.2	64	0.4	11
40	2.8	1.8	51	5,000	25.4	72	1.0	28
60	4.1	2.4	68	7,500	38.1	76	1.6	45
80	5.5	3.1	88	10,000	50.8	80	2.3	65
100	6.9	3.8	108	12,000	61.0	83	2.9	82

12" (305mm) Full-Flow Air Knife tested

For Technical Assistance, Call an EXAIR Application Engineer 1-800-903-9247
Toll Free FAX (866) 329-3924 • E-mail: techelp@exair.com • www.exair.com

EXAIR_Cat36_25_FROMINDESIGN.indb 36 12/20/24 3:46 PM



A series of Full-Flow Air Knives "float" layers of plastic film in the confined space of the machine.

Airflow Pattern

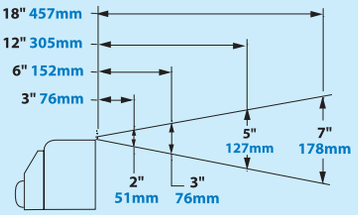

Full-Flow Air Knife Dimensions

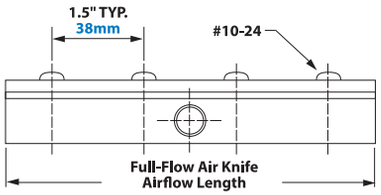

DOWNLOAD drawings at EXAIR.com

Aluminum

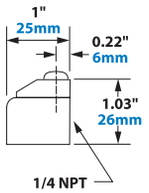

Stainless Steel

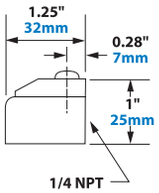

Full-Flow Air Knife Only

Airflow Length	Aluminum Model	Type 303SS Model
3" (76mm)	2603	2603SS
6" (152mm)	2606	2606SS
9" (229mm)	2609	2609SS
12" (305mm)	2612	2612SS
18" (457mm)	2618	2618SS
24" (610mm)	2624	2624SS
30" (762mm)	2630	2630SS
36" (914mm)	2636	2636SS

ORDER ONLINE at EXAIR.com

Full-Flow Air Knife Kits

Kits include a Full-Flow Air Knife, shim set, filter separator and pressure regulator (with coupler).

Airflow Length	Aluminum Model	Type 303SS Model
3" (76mm)	2803	2803SS
6" (152mm)	2806	2806SS
9" (229mm)	2809	2809SS
12" (305mm)	2812	2812SS
18" (457mm)	2818	2818SS
24" (610mm)	2824	2824SS
30" (762mm)	2830	2830SS
36" (914mm)	2836	2836SS

Deluxe Full-Flow Air Knife Kits

Kits include a Full-Flow Air Knife, EFC, Universal Mounting System, shim set, filter separator and pressure regulator (with coupler).

Airflow Length	Aluminum Model	Type 303SS Model
3" (76mm)	2803DX	2803SSDX
6" (152mm)	2806DX	2806SSDX
9" (229mm)	2809DX	2809SSDX
12" (305mm)	2812DX	2812SSDX
18" (457mm)	2818DX	2818SSDX
24" (610mm)	2824DX	2824SSDX
30" (762mm)	2830DX	2830SSDX
36" (914mm)	2836DX	2836SSDX

Full-Flow Air Knife Shim Sets

Shim Sets include (1) each of a .001" (0.03mm), .003" (0.08mm) and .004" (0.10mm) plastic shim. Stainless Steel Shim Sets include (1) .002" (0.05mm) thick shim.

Airflow Length	Aluminum Model	Type 303SS Model
3" (76mm)	2903	2903SS
6" (152mm)	2906	2906SS
9" (229mm)	2909	2909SS
12" (305mm)	2912	2912SS
18" (457mm)	2918	2918SS
24" (610mm)	2924	2924SS
30" (762mm)	2930	2930SS
36" (914mm)	2936	2936SS

Accessories

Model #	Description
9001	Auto Drain Filter Separator, 3/8 NPT, 65 SCFM (1,841 SLPM)
9032	Auto Drain Filter Separator, 1/2 NPT, 90 SCFM (2,549 SLPM)
9002	Auto Drain Filter Separator, 3/4 NPT, 220 SCFM (6,230 SLPM)
9005	Oil Removal Filter, 3/8 NPT, 15-37 SCFM (425-1,048 SLPM)
9006	Oil Removal Filter, 3/4 NPT, 50-150 SCFM (1,416-4,248 SLPM)
9008	Pressure Regulator, 1/4 NPT, 50 SCFM (1,416 SLPM)
9033	Pressure Regulator, 1/2 NPT, 100 SCFM (2,832 SLPM)
9009	Pressure Regulator, 3/4 NPT, 220 SCFM (6,230 SLPM)
9020	Solenoid Valve, 120V, 50/60Hz, 1/4 NPT, 40 SCFM (1,133 SLPM)
9034	NEMA 4/4X Solenoid Valve, 120V, 50/60Hz, 1/2 NPT, 100 SCFM (2,832 SLPM)
9036	NEMA 4/4X Solenoid Valve, 120V, 50/60Hz, 3/4 NPT, 200 SCFM (5,664 SLPM)
9065	NEMA 4/4X Solenoid Valve, 24VDC, 1 NPT, 350 SCFM (9,911 SLPM)

Special length Full-Flow Air Knives and unlimited system lengths are available. Magnetic bases with Stay Set™ flexible hoses are also available for smaller Full-Flow Air Knives. Please contact our factory.

Inlets on each end are available at a small charge. This is not recommended if uniform flow is desired. Please contact one of our Application Engineers for details.

Universal Air Knife Mounting System



EXAIR's Universal Air Knife Mounting System allows for easy positioning of all EXAIR Air Knives. See page 29 for details.

EXAIR_Cat36_25_FROMINDESIGN.indb 37 12/20/24 3:46 PM

Super Air Wipe™

Blowoff, dry, clean and cool pipe, cable, extruded shapes, hose, and wire!

Split design requires no threading!

- ☑ Uniform 360° Airflow!
- ☑ For Environments Up To 800°F
- ☑ Variable Force And Flow!

What Is The Super Air Wipe?

EXAIR's Super Air Wipe provides a uniform 360° airstream that is ideal for blowoff, drying, cleaning and cooling of pipe, cable, extruded shapes, hose, wire and more. The split design offers easy clamping around the surface of the material moving through it, eliminating the need for threading. Available from 3/8" (10mm) through 11" (279mm) diameters.

All models include stainless steel screws and shims. Stainless steel wire braided hose is also included on sizes up to 4" (102mm) for added corrosion and heat resistance. Aluminum models are rated for temperatures up to 400°F (204°C) and stainless steel models for temperatures up to 800°F (427°C).

Plant Engineering PRODUCT of the YEAR Finalist 2002

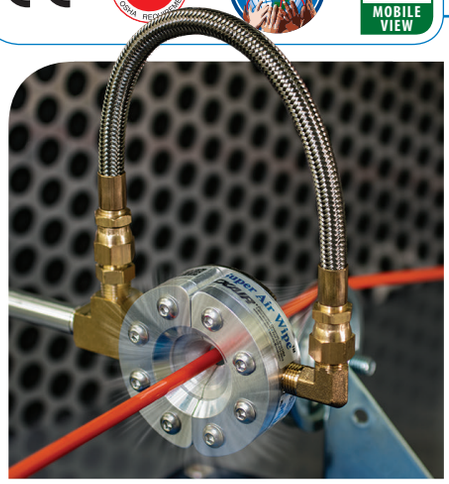

A 3/8" Super Air Wipe uniformly dries a hose as it exits a cooling bath.



The stainless steel Super Air Wipe is ideal for food and pharmaceutical applications.

Built to Last 5 yr. WARRANTY
See our Terms & Conditions

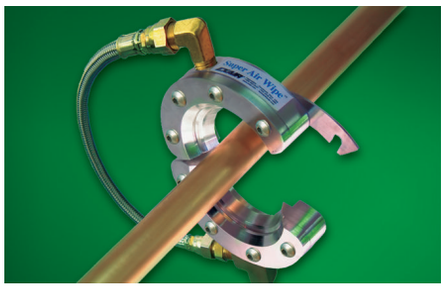

The split design of the Super Air Wipe unlatches easily to eliminate threading.

Applications

- Drying after washing, cleaning, plating or coating
- Blowoff dust and contaminants
- Cool hot extruded shapes
- Uniformly wipe surfaces
- Dry extruded profiles, rod and medical tubing
- Eliminate solution carryover - no cross contamination
- Blow excess water from automotive door gaskets
- Remove excess coatings, water and oil
- Dry tube, hose, wire, fiber optics
- Minimize solution loss due to drag-out
- Clean paint gun tips
- Dry screen printed or ink jetted surfaces
- Clean strips and ribbon

Advantages

- Quiet
- Low air consumption
- Uniform 360° airflow
- Stainless steel hardware resists corrosion
- Aluminum models for temperatures up to 400°F (204°C) Stainless steel models for temperatures up to 800°F (427°C)
- Stainless steel hose supplied on sizes up to 4" (102mm)
- No electricity, no moving parts
- Non-contact - no wiper blade
- Split design - compact, rugged, easy to install
- Lightweight, low profile
- Tapped holes for mounting
- Variable force and flow
- Meets OSHA maximum dead end pressure and noise requirements

EXAIR_Cat36_25_FROMINDESIGN.indb 38 12/20/24 3:46 PM

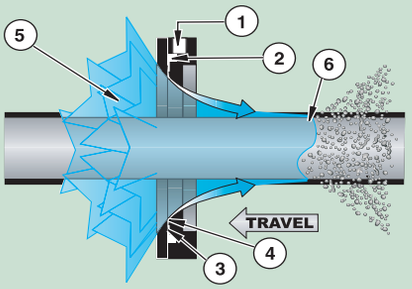

How The Air Wipe Works

Compressed air flows through an inlet (1) of the Air Wipe into an annular chamber (2). It is then throttled through a small ring nozzle (3) at high velocity. This primary airstream adheres to the Coanda profile (4), which directs it down the angled surface of the Air Wipe. A low pressure area is created at the center (5) inducing a high volume flow of surrounding air into the primary airstream. As the airflow leaves the Air Wipe, it creates a conical 360° ring of air that attaches itself to the surface of the material running through it (6), uniformly wiping the entire surface with the high velocity airflow.



The aluminum Super Air Wipe is available in 11 sizes from stock. The stainless steel Super Air Wipe is available in 5 sizes from stock. Other sizes are available by special order.

Why The Super Air Wipe?

Prior to the introduction of the Super Air Wipe, the only way to blowoff, dry, clean and cool cylindrical, round, or extruded surfaces was to use a ring of air nozzles. The high air consumption and noise levels of the nozzles along with inconsistent air velocity often delivered poor results. The Super Air Wipe provides a high volume, high velocity airflow that is uniformly ejected from the 360° of its inner diameter. The airstream attaches itself to the material running through it to effectively wipe, clean or dry surfaces. Velocity can be varied from a “blast” to a “breeze”. Air consumption and noise are low.

Super Air Wipe Is Easy To Use

There is a 1/4 NPT female inlet on each half of the Super Air Wipe on sizes up to 7" (178mm). Sizes 9" (229mm) and larger include two 1/4 NPT female inlets on each half in order to maintain proper air volume and performance. Aluminum Super Air Wipes up to 4" (102mm) include a brass tee that supplies one half directly and a stainless steel wire braided coupling hose rated at 400°F (204°C) to supply the other half. Stainless steel Super Air Wipes up to 4" (102mm) include a stainless steel tee and a stainless steel wire braided coupling hose rated at 800°F (427°C). Larger sizes should be piped directly.

Tapped holes on the downstream side are provided for permanent mounting if the Super Air Wipe is not held in place with rigid pipe. Coupling brackets that hold each half of the Super Air Wipe together are provided which can be installed or removed quickly if required.

Cooling Extruded Tubing

The Problem: The extruded product, being hot and pliable, would slump and produce a crooked length of tubing. The customer tried using a series of rollers to support the extrusion until it cooled enough to become stiff. This helped somewhat, but they still experienced slump between rollers. The end product still would not meet customer specifications.
The Solution: Using a Model 2401 1" (25mm) Super Air Wipe positioned between two rollers, the product was cooled enough to maintain rigidity. Adding another set of Air Wipe/rollers, they were able to extrude even faster.
Comment: Not only were they able to salvage a $30,000 order, the increased process speed enabled them to requote the job at a lower price and secure future business from their customer.

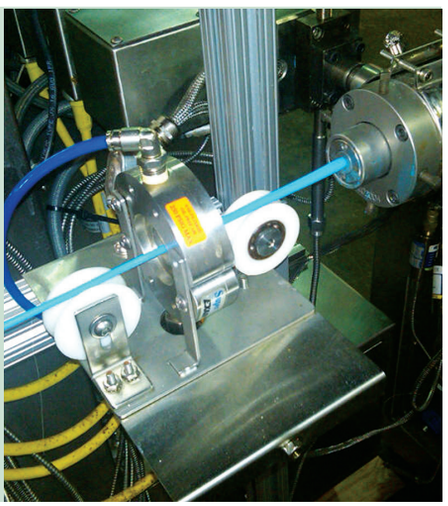

EXAIR_Cat36_25_FROMINDESIGN.indb 39 12/20/24 3:46 PM

Super Air Wipe

Air Wipe Dimensions

DOWNLOAD drawings at EXAIR.com

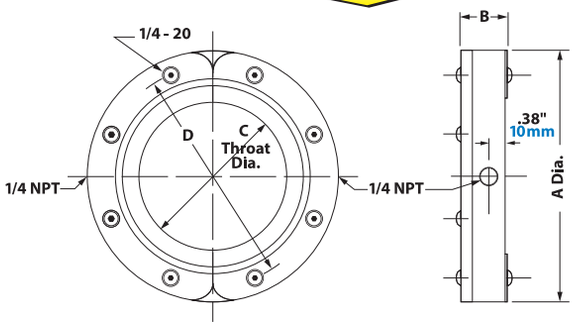

Super	Std		A	B	C	D
2399	2429	in	3.13	1.13	0.38	2.38
		mm	79	29	10	60
2400, 2400SS	2430	in	3.25	1.13	0.50	2.50
		mm	83	29	13	64
2401, 2401SS	2431	in	3.75	1.13	1	2.95
		mm	95	29	25	75
2402, 2402SS	2432	in	4.75	1.13	2	3.95
		mm	121	29	51	100
2403, 2403SS	2433	in	5.75	1.13	3	4.95
		mm	146	29	76	126
2404, 2404SS	2434	in	6.75	1.13	4	5.95
		mm	172	29	102	151
2405	2435	in	7.75	1.13	5	6.95
		mm	197	29	127	176
2406	2436	in	8.75	1.13	6	7.95
		mm	222	29	152	202
2407	2437	in	9.75	1.13	7	8.95
		mm	248	29	178	227
2409	2439	in	11.75	1.13	9	10.95
		mm	299	29	229	278
2411	2441	in	13.75	1.13	11	12.95
		mm	349	29	279	329

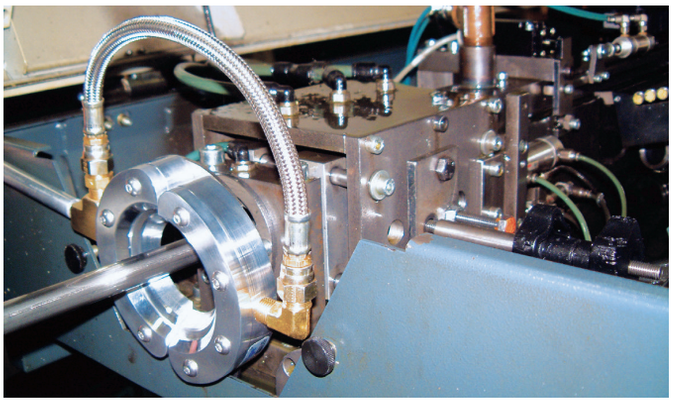

The Super Air Wipe eliminates the possibility of smoke during machining by wiping hydraulic oil from the bar stock as it enters the chuck.

Air Wipe Performance

80 PSIG (5.5 BAR)	Air Consumption		Sound Level @3' (914mm)
Model #	SCFM	SLPM	dBA
2399, 2429	11.1	314	82
2400, 2400SS, 2430	13.9	394	80
2401, 2401SS, 2431	19.1	541	80
2402, 2402SS, 2432	29.5	835	81
2403, 2403SS, 2433	39.8	1,127	82
2404, 2404SS, 2434	50.2	1,422	82
2405, 2435	60.6	1,716	82
2406, 2436	71.0	2,010	84
2407, 2437	81.3	2,302	85
2409, 2439	102.1	2,891	87
2411, 2441	122.8	3,477	89

Super Air Wipe Specifications

The Super Air Wipe is available with throat diameters (I.D.) of 3/8", 1/2", 1", 2", 3", 4", 5", 6", 7", 9", and 11" (10, 13, 25, 51, 76, 102, 127, 152, 178, 229, and 279mm). **Special diameters are available. Please contact our factory.**

Compressed Air Inlets: The Super Air Wipe has compressed air inlets on each half. Stainless steel wire braided hose is supplied with sizes up to 4" (102mm) that couples the air supply of one half to the other. Sizes 9" (229mm) and larger have two inlets on each half that must be supplied with compressed air to maintain uniform airflow.

Filtration: The use of clean air is essential. Kits include an automatic drain filter separator with a 5 micron filter element that is sized properly for flow.

Materials of Construction: The Super Air Wipe is constructed of aluminum or stainless steel. All models use stainless steel shims and screws. Stainless steel wire braided hose is included with sizes up to 4" (102mm).

Temperature: Aluminum Super Air Wipes are rated for temperatures up to 400°F (204°C). Stainless steel models are rated for temperatures to 800°F (427°C).

Mounting: The Super Air Wipe can be supported by the compressed air supply pipe. Tapped holes (1/4-20) on the downstream side of the Super Air Wipe can also be used for mounting.

Regulation: A pressure regulator on the compressed air supply provides infinite control of flow, force and air consumption. Kits include a pressure regulator that is sized properly for flow.

Shim Sets: The Super Air Wipe has a .002" (0.05mm) gap setting. The compressed air exhausts through a gap which is set with a stainless steel shim positioned between the cap and body of the Super Air Wipe. Force and flow through the Super Air Wipe may be easily increased by adding shims to open the gap. Kits include a shim set. Shim sets include (2) .002" (0.05mm) thick stainless steel shims.

Changing Performance By Adding Shims

The compressed air exhausts through a gap which is set with a shim positioned between the cap and the body of the Super Air Wipe. The Super Air Wipe is shipped with a .002" (0.05mm) thick stainless steel shim installed which works best for most applications. Force and flow may be easily increased by adding shims to open the gap. Increasing the gap opening offers higher velocity and harder hitting force. Air consumption and noise will be slightly higher. Super Air Wipe shim sets include two .002" (0.05mm) stainless steel shims that can be stacked. Shim sets are included with all kits or can be purchased separately.

Special diameter Super Air Wipes are available. Please contact our factory.

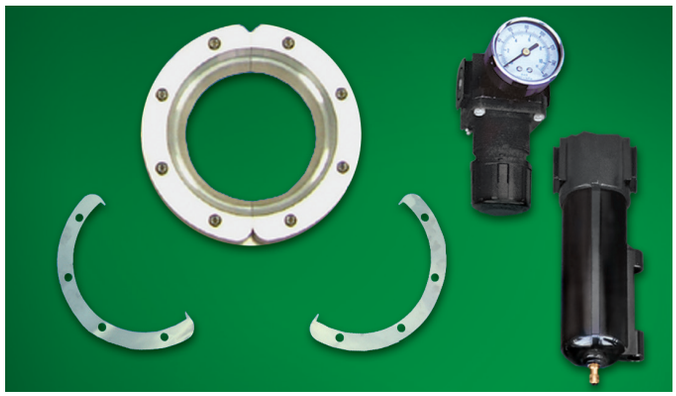

The Super Air Wipe Kit includes a stainless steel shim set, filter separator and pressure regulator (with coupler).

Super Air Wipe Models

Super Air Wipe Only

Super Air Wipe Kits - include the Super Air Wipe, shim set, filter separator and pressure regulator (with coupler).

Super Air Wipe Shim Sets - include (2) .002" (0.05mm) thick stainless steel shims.

I.D.	Aluminum Super Air Wipe Only Model	Aluminum Super Air Wipe Kit Model	Stainless Steel Super Air Wipe Only Model	Stainless Steel Super Air Wipe Kit Model	Super Air Wipe Shim Set Model
3/8" (10mm)	2399	2449	N/A	N/A	2349SS
1/2" (13mm)	2400	2450	2400SS	2450SS	2350SS
1" (25mm)	2401	2451	2401SS	2451SS	2351SS
2" (51mm)	2402	2452	2402SS	2452SS	2352SS
3" (76mm)	2403	2453	2403SS	2453SS	2353SS
4" (102mm)	2404	2454	2404SS	2454SS	2354SS
5" (127mm)	2405	2455	N/A	N/A	2355SS
6" (152mm)	2406	2456	N/A	N/A	2356SS
7" (178mm)	2407	2457	N/A	N/A	2357SS
9" (229mm)	2409	2459	N/A	N/A	2359SS
11" (279mm)	2411	2461	N/A	N/A	2361SS

Accessories

Model #	Description
9001	Auto Drain Filter Separator, 3/8 NPT, 65 SCFM (1,841 SLPM)
9032	Auto Drain Filter Separator, 1/2 NPT, 90 SCFM (2,549 SLPM)
9002	Auto Drain Filter Separator, 3/4 NPT, 220 SCFM (6,230 SLPM)
9005	Oil Removal Filter, 3/8 NPT, 15-37 SCFM (425-1,048 SLPM)
9006	Oil Removal Filter, 3/4 NPT, 50-150 SCFM (1,416-4,248 SLPM)
9008	Pressure Regulator, 1/4 NPT, 50 SCFM (1,416 SLPM)
9033	Pressure Regulator, 1/2 NPT, 100 SCFM (2,832 SLPM)
9009	Pressure Regulator, 3/4 NPT, 220 SCFM (6,230 SLPM)
9020	Solenoid Valve, 120V, 50/60Hz, 1/4 NPT, 40 SCFM (1,133 SLPM)
9034	NEMA 4/4X Solenoid Valve, 120V, 50/60Hz, 1/2 NPT, 100 SCFM (2,832 SLPM)
9036	NEMA 4/4X Solenoid Valve, 120V, 50/60Hz, 3/4 NPT, 200 SCFM (5,664 SLPM)

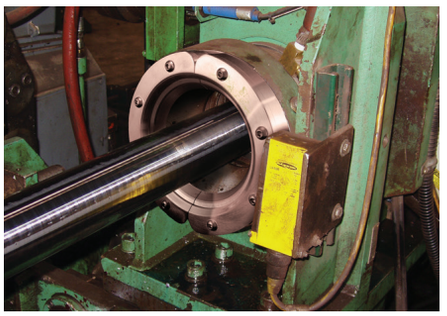

A Model 2404 4" (102mm) Super Air Wipe cleans a steel rod after processing.



The flanged end of an axle is lifted through a Super Air Wipe to blow off chips after machining.



EXAIR's 1/2" Super Air Wipe dries a wire as it exits a cooling bath.

EXAIR_Cat36_25_FROMINDESIGN.indb 41 12/20/24 3:46 PM

Standard Air Wipe™

This hard-hitting 360° ring of airflow is the economical way to blowoff, dry, clean, and cool!

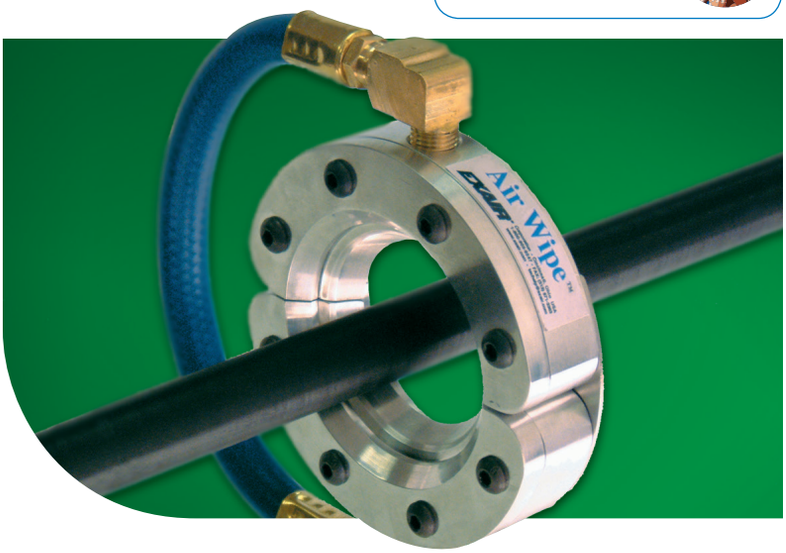

What Is The Standard Air Wipe?

EXAIR's Standard Air Wipe provides a uniform 360° airstream that is ideal for blowoff, drying, cleaning and cooling of pipe, cable, extruded shapes, hose and more. The split design offers easy clamping around the surface of the material moving through it, eliminating the need for threading.

Why The Standard Air Wipe?

The Standard Air Wipe is a good choice when the added durability of stainless steel screws, shims and hose are not required. The Standard Air Wipe uses coated screws, plastic shims and a general purpose PVC coupling air hose on sizes up to 4" (102mm). The Standard Air Wipe is best suited to applications in non-corrosive environments where temperatures do not exceed 150°F (66°C). The dimensions and performance of this product are the same as that of the Super Air Wipe which is detailed on page 40.

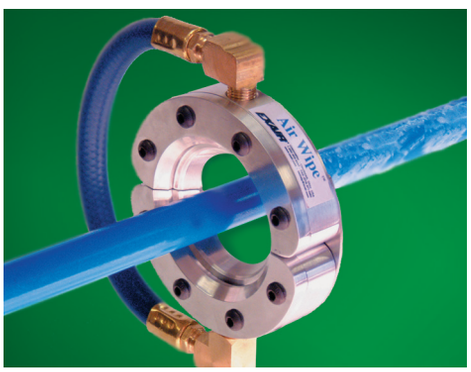

The Standard Air Wipe removes liquid from a plastic rod.

Standard Air Wipe Specifications

The Standard Air Wipe is available with throat diameters (I.D.) of 3/8", 1/2", 1", 2", 3", 4", 5", 6", 7", 9", and 11" (10, 13, 25, 51, 76, 102, 127, 152, 178, 229, and 279mm). **Special diameters are available. Contact our factory.**

Compressed Air Inlets: The Standard Air Wipe has compressed air inlets on each half. General purpose compressed air hose is supplied with sizes up to 4" (102mm) that couples the air supply of one half to the other. Sizes 9" (229mm) and larger have two inlets on each half that must be supplied with compressed air to maintain uniform airflow.

Filtration: The use of clean air is essential. Kits include an automatic drain filter with a 5 micron filter element that is sized properly for flow.

Materials of Construction: The Standard Air Wipe is constructed of aluminum. All models use coated screws and plastic shims. General purpose PVC air hose is included with sizes up to 4" (102mm).

Temperature: The Standard Air Wipe is rated for temperatures up to 150°F (66°C).

Mounting: The Standard Air Wipe can be supported by the compressed air supply pipe. Tapped holes (1/4-20) on the downstream side of the Standard Air Wipe can also be used for mounting.

Regulation: A pressure regulator on the compressed air supply provides infinite control of flow, force and air consumption. Kits include a pressure regulator that is sized properly for flow.

Shim Sets: The Standard Air Wipe has a .002" (0.05mm) gap setting. The compressed air exhausts through a gap which is set with a plastic shim positioned between the cap and body of the Standard Air Wipe. Force and flow through the Standard Air Wipe may be easily increased by adding shims to open the gap. Kits include a shim set (three additional shims). Shim sets include two ***.001" (0.03mm) Amber color*** ▮, ***.003" (0.08mm), Green color*** ▮, ***and .004" (0.10mm) thick Tan color*** ▮ plastic shims.

EXAIR_Cat36_25_FROMINDESIGN.indb 42 12/20/24 3:46 PM

Changing Performance By Adding Shims

The compressed air exhausts through a gap which is set with a shim positioned between the cap and the body of the Standard Air Wipe. It is shipped with a .002" (0.05mm) thick plastic shim installed which works best for most applications. Force and flow may be easily increased by adding shims to open the gap. Increasing the gap opening offers higher velocity and harder hitting force. Air consumption and noise will be slightly higher. Air Wipe shim sets are available that include two each of a ***.001" (0.03mm) Amber color***, ***.003" (0.08mm) Green color***, and ***.004" (0.10mm)*** thick ***Tan color*** plastic shims. Shim sets are included with all kits or may be purchased separately.

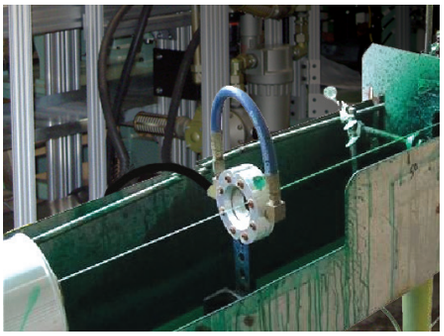

A Model 2431 1" (25mm) Standard Air Wipe blows off the excess coating from a wire into a dip tank.

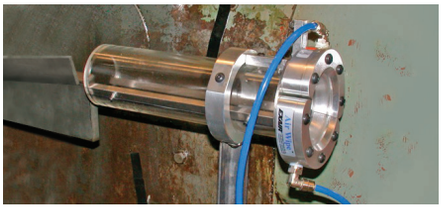

The Standard Air Wipe blows coolant off the part and back into the centerless grinder.



The Standard Air Wipe Kit includes a shim set, filter separator and pressure regulator (with coupler).

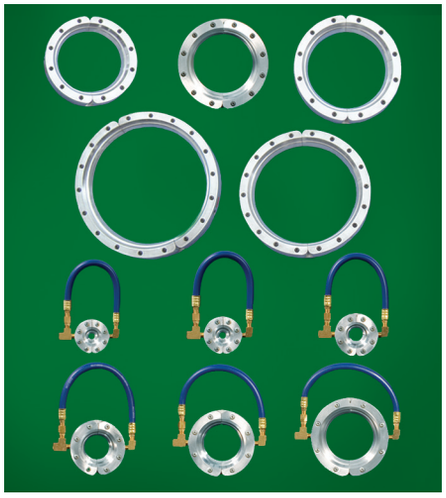

The Standard Air Wipe is available in sizes from 3/8" (10mm) to 11" (279mm) in diameter.

Standard Air Wipe Models

Standard Air Wipe Only
Standard Air Wipe Kits - include the Standard Air Wipe, shim set, filter separator and pressure regulator (with coupler).
Standard Air Wipe Shim Sets - include (2) each of a .001" (0.03mm), .003" (0.08mm) and .004" (0.10mm) thick plastic shim.

I.D.	Standard Air Wipe Only Model	Standard Air Wipe Kit Model	Standard Air Wipe Shim Set Model
3/8" (10mm)	2429	2479	2349
1/2" (13mm)	2430	2480	2350
1" (25mm)	2431	2481	2351
2" (51mm)	2432	2482	2352
3" (76mm)	2433	2483	2353
4" (102mm)	2434	2484	2354
5" (127mm)	2435	2485	2355
6" (152mm)	2436	2486	2356
7" (178mm)	2437	2487	2357
9" (229mm)	2439	2489	2359
11" (279mm)	2441	2491	2361

Accessories

Model #	Description
9001	Auto Drain Filter Separator, 3/8 NPT, 65 SCFM (1,841 SLPM)
9032	Auto Drain Filter Separator, 1/2 NPT, 90 SCFM (2,549 SLPM)
9002	Auto Drain Filter Separator, 3/4 NPT, 220 SCFM (6,230 SLPM)
9005	Oil Removal Filter, 3/8 NPT, 15-37 SCFM (425-1,048 SLPM)
9006	Oil Removal Filter, 3/4 NPT, 50-150 SCFM (1,416-4,248 SLPM)
9008	Pressure Regulator, 1/4 NPT, 50 SCFM (1,416 SLPM)
9033	Pressure Regulator, 1/2 NPT, 100 SCFM (2,832 SLPM)
9009	Pressure Regulator, 3/4 NPT, 220 SCFM (6,230 SLPM)
9020	Solenoid Valve, 120V, 50/60Hz, 1/4 NPT, 40 SCFM (1,133 SLPM)
9034	NEMA 4/4X Solenoid Valve, 120V, 50/60Hz, 1/2 NPT, 100 SCFM (2,832 SLPM)
9036	NEMA 4/4X Solenoid Valve, 120V, 50/60Hz, 3/4 NPT, 200 SCFM (5,664 SLPM)

Special diameter Standard Air Wipes are available. Please contact our factory.

EXAIR_Cat36_25_FROMINDESIGN.indb 43 12/20/24 3:46 PM

Air Amplifiers

Vent, exhaust, cool, dry, clean – with no moving parts!



What Are Air Amplifiers?

A simple, low cost way to move air, smoke, fumes, and light materials. Air Amplifiers utilize the Coanda effect, a basic principle of fluid dynamics, to create air motion in their surroundings. Using a small amount of compressed air as their power source, Air Amplifiers pull in large volumes of surrounding air to **produce high volume, high velocity outlet flows. Quiet, efficient Air Amplifiers will create output flows up to 25 times their consumption rate.**



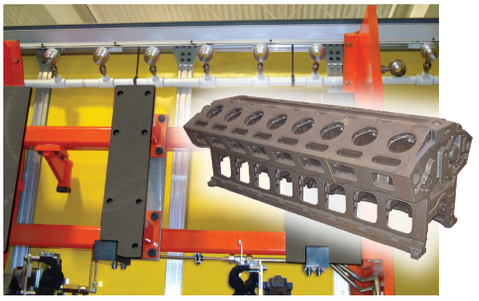

A series of Model 6042 2" (51mm) Adjustable Air Amplifiers blow coolant off 16 cylinder diesel engines.

Why Air Amplifiers?

Air Amplifiers have no moving parts, assuring maintenance-free operation. No electricity is required. Flow, vacuum and velocity are easy to control. Outlet flows are easily adjusted by opening or closing the air gap. Supply air pressure can be regulated to fine tune outlet flow to meet application needs.

Both the vacuum and discharge ends of the Air Amplifier can be ducted, making them ideal for drawing fresh air from another location, or moving smoke and fumes away.

Built to Last 5 yr. WARRANTY
See our Terms & Conditions



Adjustable Air Amplifiers are ducted to draw clean air for drying.

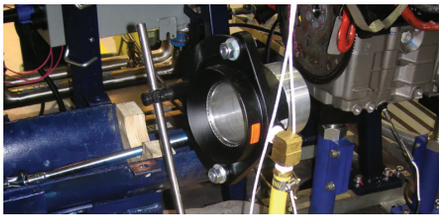

A Model 120024 4" (102mm) Super Air Amplifier cools an engine during dynamometer testing.

Applications

- Vent welding smoke
- Cool hot parts
- Dry wet parts
- Clean machined parts
- Distribute heat in molds/ovens
- Ventilate confined areas
- Dust collection
- Exhaust tank fumes

Advantages Compared to Fans:

- Compact, lightweight, portable
- No electricity
- No moving parts – no maintenance
- Ends are easily ducted
- Instant on/off
- Variable force and flow
- No RF interference

Compared to Venturis and Ejectors:

- More air volume with lower compressed air consumption
- Higher flow amplification
- No internal obstructions
- Meets OSHA pressure and noise requirements
- Quiet

EXAIR_Cat36_25_FROMINDESIGN.indb 44 12/20/24 3:46 PM

How Air Amplifiers Work

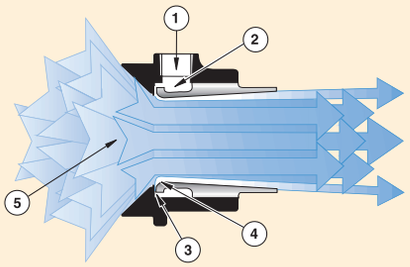

Compressed air flows through the air inlet (1) into an annular chamber (2). It is then throttled through a small ring nozzle (3) at high velocity. This primary airstream adheres to the Coanda profile (4), which directs it toward the outlet. A low pressure area is created at the center (5), inducing a high volume flow of surrounding air into the primary airstream. The combined flow of primary and surrounding air exhausts from the Air Amplifier in a high volume, high velocity flow.

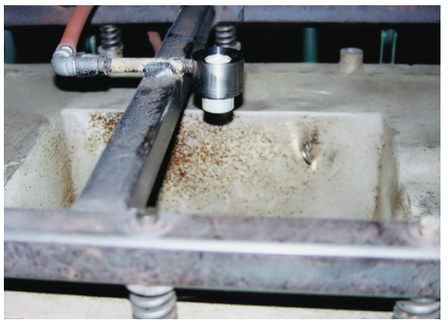

A Model 121021 1-1/4" (32mm) High Temperature Air Amplifier directs hot air to a rotational mold cavity for uniform wall thickness of the plastic part.

Air Amplifier Model Selection Guide

	Air Amplifier Comparison					
	Efficiency	Sound Level	Mounting Flange	Flow Adjustment	Temp. Rating	Corrosive Applications
Super Air Amplifier	High	Low	Yes	With Shims	275°F (135°C)	No
Aluminum Adjustable Air Amplifier	Medium	Variable	No	Infinite (No shims)	275°F (135°C)	No
Stainless Steel Adjustable Air Amplifier	Medium	Variable	No	Infinite (No shims)	400°F (204°C)	Yes
High Temperature Air Amplifier	High	Low	No	With Shims	700°F (374°C)	Yes

Special Air Amplifiers

EXAIR will manufacture special Air Amplifiers suited to your specific application requirements. The Model 121021 High Temperature Air Amplifier (shown top right) was developed for moving hot air to surfaces requiring uniform heating while in a furnace or oven. Modeled after our Super Air Amplifier, the High Temperature Air Amplifier is the most efficient for pushing high volumes of hot air to points that typically remain cool. This special design is rated for environments up to 700°F (374°C) and its surface is protected from heat stress by a mil-spec. coating process (developed for the aircraft industry), allowing easy disassembly for changing shims or cleaning.

Another stainless steel version for flange mounting was developed as a fan back-up for exhausting flue gases from a furnace (shown middle right). In the event of a power failure, this special Air Amplifier can quickly evacuate the fumes that could be harmful to workers close by.

A PTFE plug was used with a stainless steel Adjustable Air Amplifier (shown bottom right) to help pull a sticky material through a process and prevent the material from depositing on the Air Amplifier.

EXAIR's Intelligent Compressed Air® products can be manufactured to your special requirements.

If you have special requirements, please contact an Application Engineer to discuss your application.



This special stainless steel flange-mount Air Amplifier was designed for exhausting hot flue gases from a furnace.



Adjustable Air Amplifier with PTFE plug helped pull a sticky material through a process and prevented the material from depositing on the Air Amplifier.

EXAIR_Cat36_25_FROMINDESIGN.indb 45 12/20/24 3:46 PM

Super Air Amplifier™

Powerful, efficient and quiet air mover for blowoff, cooling, and ventilation.



What Is The Super Air Amplifier?

EXAIR's Super Air Amplifier has a patented* design that uses a special shim to maintain critical position of the component parts. As a result, a precise amount of compressed air is released at exact intervals toward the center of the Super Air Amplifier. These jets of air create a constant, high velocity outlet flow across the entire cross-sectional area. Additional free air is pulled through the unit, resulting in higher amplification ratios. The balanced outlet airflow minimizes wind shear to produce sound levels that are typically three times quieter than other air movers.

Super Air Amplifiers are supplied with a .003" (0.08mm) slotted air gap which is ideal for most applications. Flow and force can be increased by replacing the shim with a thicker .006" (0.15mm) or .009" (0.23mm) shim. Model 120028 is supplied with a .009" (0.23mm) air gap. A .015" (0.39mm) shim is available for Model 120028.

Super Air Amplifier Performance at 80 PSIG (5.5 BAR)

	Air Consumption		Amplification	Air Volume at Outlet		Air Volume at 6" (152mm)		Sound Level
Model #	SCFM	SLPM	RATIO	SCFM	SLPM	SCFM	SLPM	dBA
120020	6.1	173	12	73	2,066	219	6,198	69
120021	8.1	229	18	146	4,132	436	12,339	72
120022	15.5	439	22	341	9,650	1,023	28,951	72
120024	29.2	826	25	730	20,659	2,190	61,977	73
120028	120	3,396	25	3,000	84,900	9,000	254,700	88

Model 120028 tested with .009" (0.23mm) shim. All other models tested with .003" (0.08mm) shim.

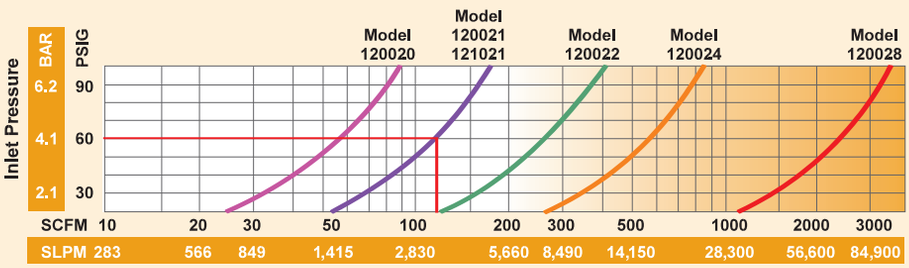

Total Output Flow with .003" (0.08mm) thick shim installed. Excludes downstream entrainment. Model 120028 tested with a .009" (0.23mm) shim.

How To Determine Super Air Amplifier Total Output Flow And Air Consumption

Total Airflow: From the performance curves (above), determine total output flow for any Super Air Amplifier at any pressure.

Example: A Model 120021 at 60 PSIG (4.1 BAR) supply air pressure has a total output flow of 120 SCFM (3,398 SLPM).

Air Consumption: Divide the total output flow by the amplification ratio (shown in the chart) to determine air consumption for any Super Air Amplifier at any air pressure.

In the example above, the Model 120021 at 60 PSIG (4.1 BAR) supply air pressure has a total output flow of 120 SCFM (3,398 SLPM). Dividing this total output flow by its amplification ratio of 18 gives an air consumption of 6.7 SCFM (189 SLPM).

*Patent #5402938



Model 120022 2" (51mm) Super Air Amplifiers and Model 1122 2" Flat Super Air Nozzles blow off transmissions after they are machined.

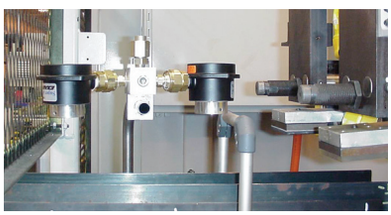

(2) Model 120022 2" (51mm) Super Air Amplifiers dry small parts as they move down along a parts conveyor.

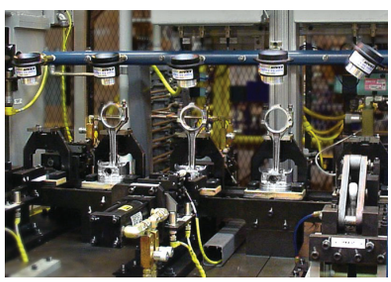

(5) Model 120022 2" (51mm) Super Air Amplifiers cool truck pistons.

For Technical Assistance, Call an EXAIR Application Engineer 1-800-903-9247
Toll Free FAX (866) 329-3924 • E-mail: techelp@exair.com • www.exair.com

EXAIR_Cat36_25_FROMINDESIGN.indb 46 12/20/24 3:46 PM

Blowoff On A Transmission Pan

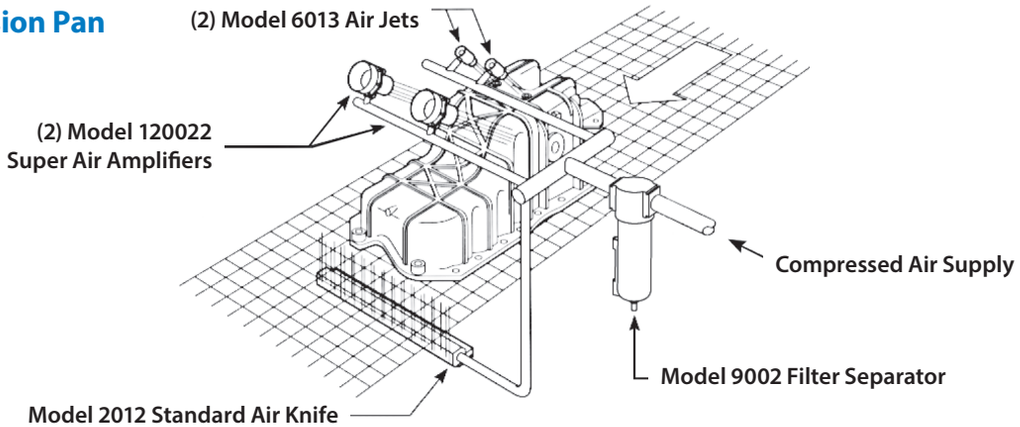

The Problem: A newly designed transmission pan presented a myriad of cleaning problems for the die-caster. Because the configuration included channels and blind holes as well as smooth surfaces, a "shaped" air pattern was required for proper cleaning. No single blowoff product would fit the need. An assortment of open copper tubes and drilled pipes was considered, but was rejected as too noisy and expensive to operate. A blower was not an option due to the high purchase price, expensive maintenance costs and frequent downtime.

The Solution: With help from our Application Engineers, the company created a cleaning system incorporating a variety of EXAIR blowoff products. **(2) Model 6013 High Velocity Air Jets,** with their confined airstream, cleared the blind holes, while **(2) Model 120022 2" (51mm) Super Air Amplifiers** cleaned the channels. A **Model 2012 12" (305mm) Standard Air Knife** was positioned to blow out the casting's underside.

Comment: There's no doubt that the casting could have been cleaned just as well by hooking up a bunch of open copper tubes and throwing a ton of air at it. But, at what cost? EXAIR makes a variety of blowoff products because parts come in a variety of shapes and sizes. **And, our products operate at a fraction of the air consumption and noise levels associated with open air pipes.** When you need to clean, cool, or dry with air, and you'd like to minimize dollars and decibels, EXAIR can help.

Super Air Amplifier Cools Iron Castings

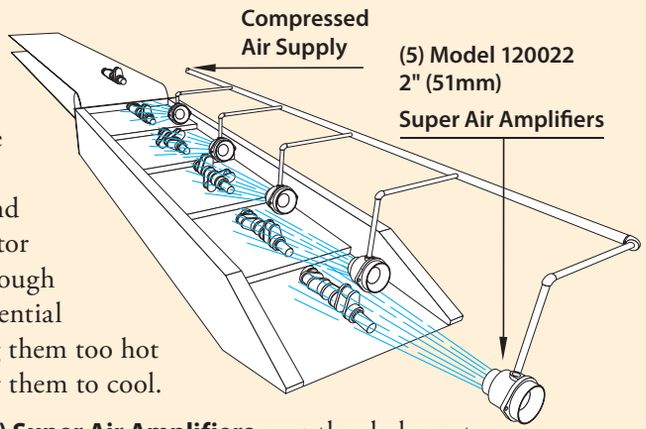

The Problem: A foundry that produces iron castings for the automotive industry had a problem with certain hot parts that slowed their production. After pouring, the castings gradually cool by traveling along a 200 foot long conveyor. At the end, a shake-out conveyor breaks the sand mold so the casting can be removed. Normally, the operator could pick up the part with special gloves and grind the rough edges. However, some castings such as crankshafts, differential housings, and shift parts retained too much heat, making them too hot to handle. The operator had to wait up to ten minutes for them to cool.

The Solution: They installed **(5) Model 120022 2" (51mm) Super Air Amplifiers** over the shake-out conveyor. The high output airflow from each Super Air Amplifier rapidly cooled the parts without shocking them (no cracks or imperfections from cooling too rapidly). **When the part reached the end of the conveyor, the operator could proceed immediately.** The backlog was completely eliminated.

Editor's Comment: This manufacturer had almost given up on finding a cooling solution since the fans and blowers that were tried in the past showed little improvement. Our Super Air Amplifier dramatically reduced the cooling time. As a result, they installed them on their second line. The low cost Super Air Amplifiers are compact, portable and have no moving parts to wear out (which is ideal in a dusty foundry). **And, the patented design assures the highest output air volumes possible with the lowest air consumption.**

EXAIR_Cat36_25_FROMINDESIGN.indb 47 12/20/24 3:46 PM

Super Air Amplifiers

Roaring Banana Breath

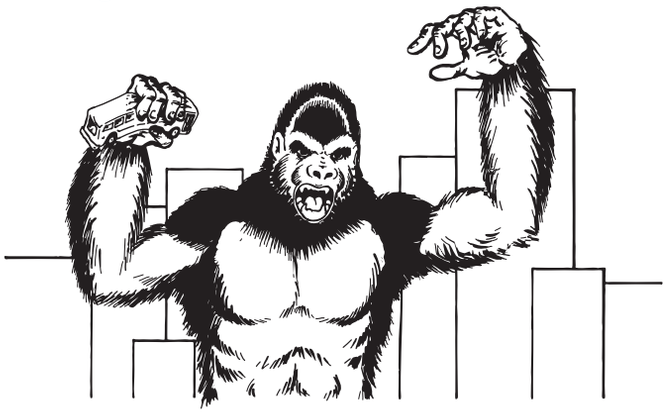

The Problem: A company that designs major attractions for theme parks created a huge gorilla to startle the patrons. The animators wanted the oversized ape to appear as "life-like" as possible. To accomplish this, they used a series of motors and cylinders to make the movement of the eyes, hands, arms and torso appear realistic. They also installed a large speaker system to play an audio sample of a loud roar that matched his mammoth size. The finishing touch was to find a way to create a powerful blast of air that smelled like bananas each time the big ape's mouth opened. Attempts using an electrically powered blower proved unsuccessful due to the noise and the inability to obtain an "instant on" blast of air.

The Solution: They installed a tank of banana extract in his tummy and connected it to his mouth with a **Model 120028 8" (203mm) Super Air Amplifier**. As the spectators moved into position, a sensor activated the electronics, setting "Old Banana Breath" (name given by the designers) into motion. With a swift movement toward the crowd, his mouth opens and **the Super Air Amplifier provides an instantaneous blast of high velocity air (filled with banana fumes) at them.**

Comment: Why did the engineers select the Super Air Amplifier? First, simplicity. There are no moving parts to wear out or require maintenance. It uses only filtered compressed air as the power source. Second is the big instantaneous blast of high volume, high velocity airflow that couldn't be obtained using a blower or air nozzles. When it comes to special effects, Super Air Amplifiers are the way to go. When you watch the movies or visit the theme parks and see fast moving fog, smoke effects, or objects flying through the air, chances are a Super Air Amplifier is being used.

Cleaning Brake Rotors

The Problem: An automotive machine shop that manufactures brake rotors was having problems with chip build-up inside the part. They tried compressed air tubing flattened on their ends with little success. This resulted in high compressed air usage, high sound levels, and danger to their employees.

The Solution: A **Model 120021 1-1/4" (32mm) Super Air Amplifier** was substituted for the tubing. It provided a larger pattern of air, used less compressed air, the sound level was substantially lower, and it couldn't be dead ended.

Comment: Bent tubing or drilled pipe are inexpensive and easy to make. However, the initial cost is over-shadowed by its high energy use; holes can be blocked and noise level is excessive – both of which are OSHA violations. EXAIR's Super Air Amplifiers are compact and dependable since there are no parts to wear out. Our patented design moves the most airflow possible while using the smallest amount of compressed air. The lower sound level was another bonus!

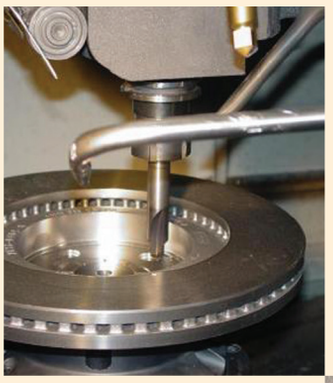



The Problem:

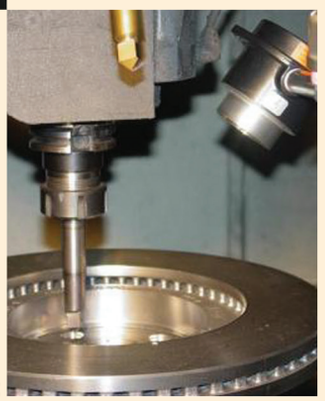

Model 120021 1-1/4" (32mm) Super Air Amplifier blows off parts and lowers sound levels.

The Solution:

EXAIR_Cat36_25_FROMINDESIGN.indb 48 12/20/24 3:46 PM

Super Air Amplifier Dimensions

Super Air Amplifier Dimensions

Model #		A	B	C	D	E	F	G	H	J	K	L	M
120020	in	0.45	0.75	0.98	1.77	2.28	0.20	0.18	0.53	0.73	2.50	0.59	1/8 NPT
	mm	11	19	25	45	58	5	5	13	19	64	15	
120021	in	0.84	0.94	1.50	2.40	3.03	0.27	0.21	0.75	1.22	2.88	0.59	1/4 NPT
	mm	21	24	38	61	77	7	5	19	31	73	15	
120022	in	1.64	1.69	2.95	3.58	4.14	0.27	0.25	0.75	2	3	0.62	3/8 NPT
	mm	42	43	75	91	105	7	6	19	51	76	16	
120024	in	3.02	2.81	4.91	6.89	8.42	0.55	0.55	1.75	3.97	4.75	0.94	1/2 NPT
	mm	77	71	125	175	214	14	14	44	101	121	24	
120028	in	6.20	4.50	9	---	11.25	---	---	2.44	8	8.94	2.38	3/4 NPT
	mm	157	114	229	---	286	---	---	62	203	227	60	

DOWNLOAD drawings at EXAIR.com

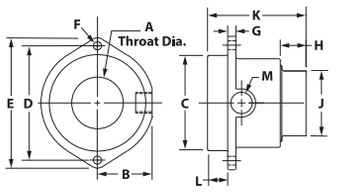

Model 120020-120024

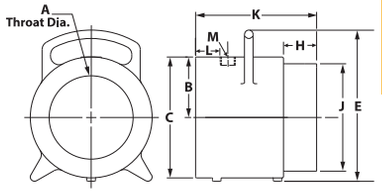

Model 120028

Airflow Pattern

Models 120020, 120021, 122022, 120024

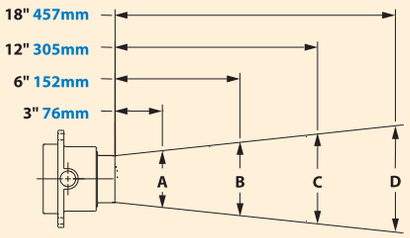

Model #		A	B	C	D
120020	in	1.25	2.2	4.1	6
	mm	32	56	104	152
120021	in	2	2.9	4.7	6.5
	mm	51	74	119	165
120022	in	2.75	3.55	5.15	6.75
	mm	70	90	131	171
120024	in	4.5	5.3	6.9	8.5
	mm	114	135	175	216

Airflow Pattern

Model 120028

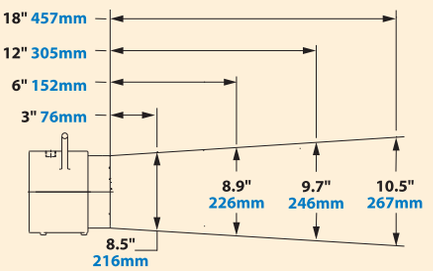

Super Air Amplifier Models

Super Air Amplifier Only

Super Air Amplifier Kits -
include a Super Air Amplifier, shim set, filter separator and pressure regulator (with coupler).

Deluxe Super Air Amplifier Kits -
include a Super Air Amplifier, EFC, shim set, filter separator and pressure regulator (with coupler).

Super Air Amplifier Shim Sets -
include (1) .006" (0.15mm) and (1) .009" (0.23mm) stainless steel shims
(except 8" which include (1) .015" (0.39mm) stainless steel shim).

Outlet Diameter	Super Air Amplifier Only Model	Super Air Amplifier Kit Model	Deluxe Super Air Amplifier Kit Model	High Temperature Air Amplifier Only Model	High Temperature Air Amplifier Kit Model	Super Air Amplifier Shim Set Model
3/4" (19mm)	120020	120220	120220DX	N/A	N/A	120320
1-1/4" (32mm)	120021	120221	120221DX	121021	121221	120321
2" (51mm)	120022	120222	120222DX	N/A	N/A	120322
4" (102mm)	120024	120224	120224DX	N/A	N/A	120324
8" (203mm)	120028	120228	120228DX	N/A	N/A	120328



Kits include a Super Air Amplifier, shim set, filter separator and pressure regulator (with coupler).



Order EXAIR's EFC™ electronic flow control to minimize compressed air use. See page 7 for details.

Accessories

Model #	Description
9001	Auto Drain Filter Separator, 3/8 NPT, 65 SCFM (1,841 SLPM)
9032	Auto Drain Filter Separator, 1/2 NPT, 90 SCFM (2,549 SLPM)
9002	Auto Drain Filter Separator, 3/4 NPT, 220 SCFM (6,230 SLPM)
9005	Oil Removal Filter, 3/8 NPT, 15-37 SCFM (425-1,048 SLPM)
9006	Oil Removal Filter, 3/4 NPT, 50-150 SCFM (1,416-4,248 SLPM)
9008	Pressure Regulator with Gauge, 1/4 NPT, 50 SCFM (1,416 SLPM)
9033	Pressure Regulator with Gauge, 1/2 NPT, 100 SCFM (2,832 SLPM)
9009	Pressure Regulator with Gauge, 3/4 NPT, 220 SCFM (6,230 SLPM)

EXAIR_Cat36_25_FROMINDESIGN.indb 49 12/20/24 3:46 PM

Adjustable Air Amplifier™

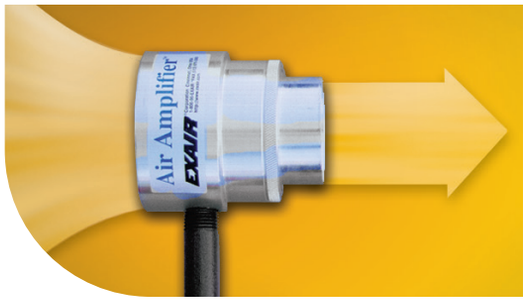

Highly effective air mover that easily adjusts to your application!

What Is The Adjustable Air Amplifier?

The air gap is infinitely adjustable which regulates the consumption and outlet flow from a "breeze" to a "blast". They are available in aluminum or in stainless steel for food service, higher temperatures (400°F/204°C), and corrosive applications. High Temperature Stainless Steel Air Amplifiers for temperatures up to 700°F (374°C) are also available. Please contact an Application Engineer.

Force and flow for the Adjustable Air Amplifier is changed by turning the exhaust end (with the knurled ring loose) to open or close the continuous air gap. When desired performance is obtained, the knurled ring can be tightened to lock the flow at that setting. In most cases, a .002" to .004" (0.05mm to 0.10mm) air gap is ideal.

Adjustable Air Amplifier Performance at 80 PSIG (5.5 BAR)

	Air Consumption		Amplification	Air Volume at Outlet		Air Volume at 6" (152mm)		Sound Level
Model #	SCFM	SLPM	RATIO	SCFM	SLPM	SCFM	SLPM	dBA
6030, 6040	8.9	252	10	89	2,520	267	7,560	78
6031, 6041	12.9	365	16	206	5,833	618	17,500	81
6032, 6042	21.5	608	20	430	12,176	1,290	36,529	82
6033, 6043	35.2	997	22	774	21,917	2,323	65,780	83
6034, 6044	50	1,416	24	1,200	33,980	3,600	101,941	84

Tested with .002" (0.05mm) gap.

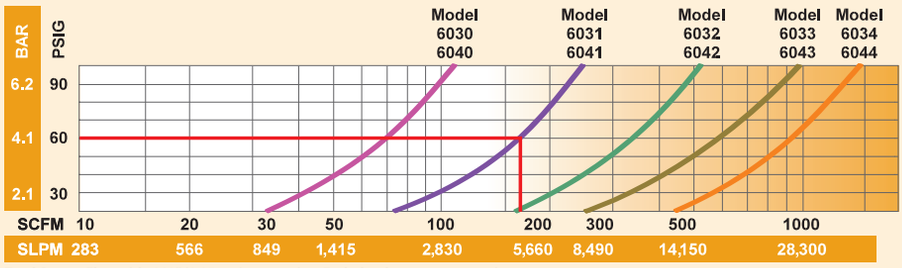

Total Output Flow with .002" (0.05mm) gap setting. Excludes downstream entrainment.

Total Output Flow with .002" (0.05mm) gap setting. Excludes downstream entrainment.

How To Determine Adjustable Air Amplifier Total Output Flow And Air Consumption

Total Airflow: From the performance curves (above), determine total output flow for any Adjustable Air Amplifier at any pressure.

Example: A Model 6031 at 60 PSIG (4.1 BAR) supply air pressure has a total output flow of 165 SCFM (4,672 SLPM).

Air Consumption: Divide total output flow by the amplification ratio (shown in the chart) to determine air consumption for any Adjustable Air Amplifier at any air pressure.

In the example above, the Model 6031 at 60 PSIG (4.1 BAR) supply air pressure has a total output flow of 165 SCFM (4,672 SLPM). Dividing this total flow by its amplification ratio of 16 gives an air consumption of 10.3 SCFM (292 SLPM).

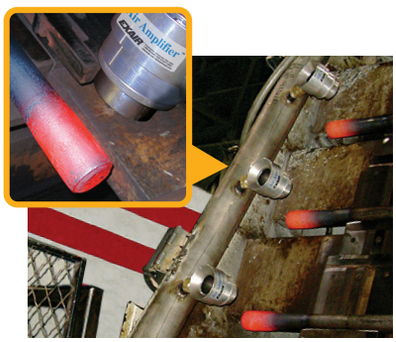

Model 6042 2" (51mm) Adjustable Air Amplifiers with swivel fittings cool inductively heated axles prior to installing the hubs.

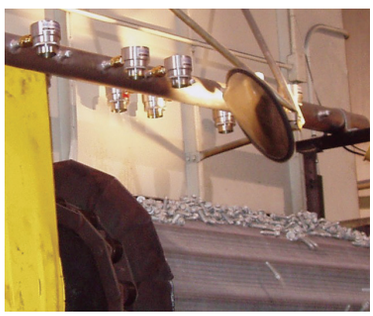

Metal parts are dried using a series of Model 6042 2" (51mm) Adjustable Air Amplifiers.

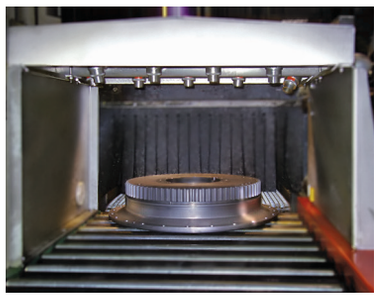

A series of Adjustable Air Amplifiers dry and cool a large machined casting as it exits a high temperature wash.

EXAIR_Cat36_25_FROMINDESIGN.indb 50 12/20/24 3:46 PM

Adjustable Air Amplifier Dimensions

DOWNLOAD drawings at EXAIR.com

Built to Last 5 yr. WARRANTY
See our Terms & Conditions

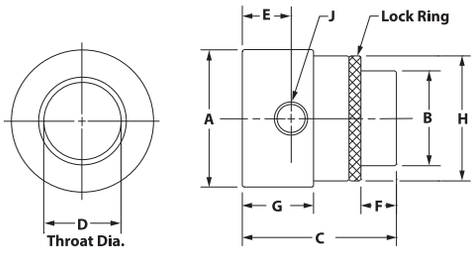

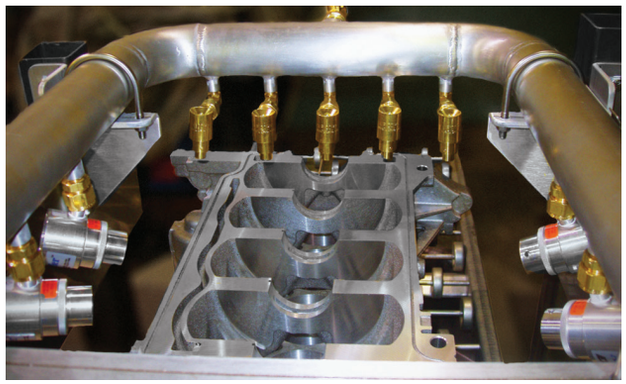

Adjustable Air Amplifiers and High Velocity Air Jets dry an engine block prior to assembly.

Adjustable Air Amplifier Dimensions										
Model #		A	B	C	D	E	F	G	H	J
6030 6040	in	1.50	0.75	2.22	0.45	0.72	0.56	1.06	1.25	1/8 NPT
	mm	38	19	57	11	18	14	27	32	
6031 6041	in	2	1.25	2.88	0.84	1	0.75	1.38	1.75	1/4 NPT
	mm	51	32	73	21	25	19	35	44	
6032 6042	in	3.13	2	3.25	1.64	1.06	0.75	1.50	2.75	3/8 NPT
	mm	79	51	83	42	27	19	38	70	
6033 6043	in	4	3	4.06	2.20	1.22	1.25	1.83	3.50	1/2 NPT
	mm	102	76	103	56	31	32	46	89	
6034 6044	in	5	4	5	3.02	1.50	1.75	2.13	4.50	1/2 NPT
	mm	127	102	127	77	38	44	54	114	



Need Swivels?

EXAIR's Swivel Fittings make it easy to adjust the aim of Air Amplifiers.

See page 68 for details.

Airflow Pattern

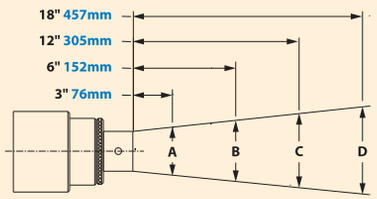

Model #		A	B	C	D
6030 6040	in	1.5	2.4	4.2	6
	mm	38	61	107	152
6031 6041	in	2	2.9	4.7	6.5
	mm	51	74	119	165
6032 6042	in	2.5	3.4	5.2	7
	mm	64	86	132	178
6033 6043	in	3.5	4.6	6.5	8
	mm	89	117	165	203
6034 6044	in	5	5.8	7.4	9
	mm	127	147	188	229

Adjustable Air Amplifier Systems

Adjustable Air Amplifier Models

Adjustable Air Amplifier Only

Adjustable Air Amplifier Kits - include an Adjustable Air Amplifier, filter separator and pressure regulator (with coupler).

Deluxe Adjustable Air Amplifier Kits - include an Adjustable Air Amplifier, EFC, filter separator and pressure regulator (with coupler).

Outlet Diameter	Aluminum Adjustable Air Amplifier Only Model	Aluminum Adjustable Air Amplifier Kit Model	Deluxe Aluminum Adjustable Air Amplifier Kit Model	Stainless Steel Adjustable Air Amplifier Only Model	Stainless Steel Adjustable Air Amplifier Kit Model	Deluxe Stainless Steel Adjustable Air Amplifier Kit Model
3/4" (19mm)	6040	6240	6240DX	6030	6230	6230DX
1-1/4" (32mm)	6041	6241	6241DX	6031	6231	6231DX
2" (51mm)	6042	6242	6242DX	6032	6232	6232DX
3" (76mm)	6043	6243	6243DX	6033	6233	6233DX
4" (102mm)	6044	6244	6244DX	6034	6234	6234DX

Accessories	
Model #	Description
9001	Auto Drain Filter Separator, 3/8 NPT, 65 SCFM (1,841 SLPM)
9032	Auto Drain Filter Separator, 1/2 NPT, 90 SCFM (2,549 SLPM)
9002	Auto Drain Filter Separator, 3/4 NPT, 220 SCFM (6,230 SLPM)
9005	Oil Removal Filter, 3/8 NPT, 15-37 SCFM (425-1,048 SLPM)
9006	Oil Removal Filter, 3/4 NPT, 50-150 SCFM (1,416-4,248 SLPM)
9008	Pressure Regulator with Gauge, 1/4 NPT, 50 SCFM (1,416 SLPM)
9033	Pressure Regulator with Gauge, 1/2 NPT, 100 SCFM (2,832 SLPM)
9009	Pressure Regulator with Gauge, 3/4 NPT, 220 SCFM (6,230 SLPM)



Kits include an Adjustable Air Amplifier, filter separator and pressure regulator (with coupler).

Air Nozzles and Jets

Engineered Air Nozzles and Jets reduce noise levels and air costs.

"Go Green" by upgrading your blowoff, cooling and drying operation to award winning Super Air Nozzles!



Built to Last 5 yr. WARRANTY
See our Terms & Conditions



What Are Air Nozzles and Jets?

A simple solution to reduce excessive air consumption and noise levels on compressed air blowoff operations. EXAIR Air Nozzles and Jets produce outlet flows up to 25 times compressed air consumption using a small amount of compressed air as the power source. Many power companies now provide attractive rebates to plants who switch to engineered Super Air Nozzles!

Why Air Nozzles and Jets?

Air savings, compared to open copper tubes or pipes commonly used for blowoff, can be as high as 80%. Less compressed air means less noise. The typical noise level reduction is 10 dBA. All EXAIR Air Nozzles and Jets meet Occupational Safety and Health Administration (OSHA) maximum dead end pressure and sound level exposure requirements and carry the CE mark.

An open 1/4" (6mm) copper tube, by contrast, ejects pure compressed air **at up to 40 SCFM (1,133 SLPM), the entire output of a 10 horsepower compressor. Annual energy cost can exceed $1,000 per year. Noise levels in excess of 100 dBA are commonly produced.** When supply pressure exceeds 30 PSIG (2 BAR), an open pipe, tube or drilled holes violates OSHA static pressure requirements.

Applications

- Part cleaning
- Chip removal
- Part drying
- Liquid blowoff
- Part cooling
- Material conveying
- Part ejection
- Fiber conveying
- Air assist

Advantages

- Reduced compressed air cost
- 10 dBA average noise reduction
- Conserve compressed air
- Improved blowoff performance
- Compact
- Improved safety
- Meets OSHA noise level requirements
- Meets OSHA pressure requirements
- Improved production



Flexible Stay Set Hoses™ are ideal where frequent repositioning of air nozzles is required.

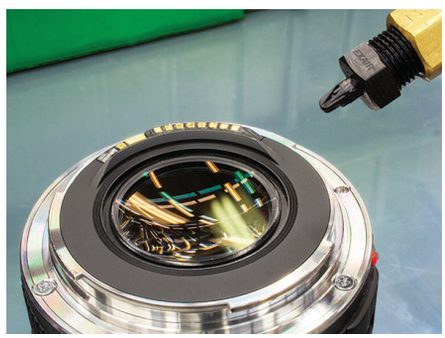

This PEEK material Atto Super Air Nozzle was chosen because of its non-marring quality for a blowoff application on a sensitive lens.

EXAIR_Cat36_25_FROMINDESIGN.indb 52 12/20/24 3:46 PM

Safe And Efficient Use Of Compressed Air

The inefficient use of compressed air for blowoff applications may create problems due to the energy costs, noise level and potential danger to personnel who are exposed to high pressure air. Open air pipes, copper tubes and drilled pipes are a few of the common abusers. They consume tremendous amounts of energy and often produce noise levels over 100 dBA.

Open Air Pipe or Copper Tube



Turbulent compressed air blasts straight out of the pipe or tube. It not only wastes huge amounts of compressed air but also violates OSHA noise and dead end pressure requirements.

Reduce Energy Costs

The best way to cut energy costs is through proper maintenance and use of the compressed air system. Leaks and dirty filters require maintenance on a regular basis. Energy savings can also be realized when replacing outdated compressor motors and controls with high efficiency models that often pay for themselves in a short period of time.

The most important factor to dramatically boost efficiency is proper use. Using engineered products like EXAIR's Super Air Nozzles can cut operating costs since they use only a fraction of the compressed air of typical blowoffs. In addition, all of the Air Nozzles and Jets shown in this catalog can be cycled on and off with an instantaneous response. EXAIR's EFC (shown on page 7) is an electronic flow control that limits compressed air use by turning on the air only when a part is present.

Reduce Noise Levels

High noise levels are a common problem for many plants. Compressed air noise often exceeds OSHA noise level exposure requirements, resulting in hearing loss to those working in close proximity. Noisy blowoffs at 80 PSIG (5.5 BAR) that produce noise levels of 100 dBA can be reduced to only 74 dBA when using a Super Air Nozzle. At that pressure, it is still possible to obtain hard-hitting force without the high noise.

OSHA Maximum Allowable Noise Exposure							
Hours per day (constant noise)	8	7	4	3	2	1	0.5
Sound level dBA	90	91	95	97	100	105	110

OSHA Standard 29 CFR - 1910.95 (a)

Eliminate Harmful Dead End Pressures

Air can be dangerous when the outlet pressure of a hole, hose or copper tube is higher than 30 PSIG (2 BAR). In the event the opening is blocked by a hand or other body part, air may enter the bloodstream through the skin, resulting in a serious injury. All of the Air Nozzles and Jets manufactured by EXAIR have been designed for safety. All are safe to be supplied with higher pressure compressed air and meet OSHA Standard 29 CFR 1910.242(b).

Air Consumption of Open Tube And Pipe

Pressure Supply			Air Consumption of Homemade Blowoffs					
			Copper Tube			Open Pipe		
PSIG	BAR		1/4"	5/16"	3/8"	1/8"	1/4"	3/8"
80	5.5	SCFM	33	58	87	70	140	240
		SLPM	934	1,641	2,462	1,981	3,962	6,792

Saving Money and Compressed Air

The table above shows the air consumption for typical homemade blowoffs. The pages that follow give the air consumption and other data on EXAIR's Air Nozzles and Jets.

Consider the following example where a Model 1102 Mini Super Air Nozzle replaces an 1/8" open pipe. The compressed air savings are easy to calculate and prove to be dramatic. Payout for Air Nozzles and Jets, including filter and installation cost is measured in weeks - not years, as is the case for other cost reduction equipment. Based on a 40 hour work week, 52 weeks a year.

Example:

1. Existing blowoff is 1/8" open pipe at 80 PSIG (5.5 BAR) supply. Air consumption, from the table above, is 70 SCFM (1,981 SLPM).
2. Use a 1/8 FNPT Model 1102 Mini Super Air Nozzle also at 80 PSIG (5.5 BAR) supply. Air consumption, from the table on page 54, is 10 SCFM (283 SLPM).
3. Compressed air saved = 70 - 10 = 60 SCFM (1,981 - 283 =1,698 SLPM)
4. For this example, the blowoff is continuous. If the duty cycle was 20%, then air saved would be 60 × .2 = 12 SCFM (1,698 × .2 = 340 SLPM).
5. Most large plants know their cost per 1,000 standard cubic feet of compressed air (10,000 standard liters). If you don't know your actual cost per 1,000 SCF, $0.25 is a reasonable average to use. (Cost per 10,000 standard liters is approximately $0.089.)
6. Dollars saved per hour = SCFM saved × 60 minutes × cost/1,000 SCF (SLPM saved × 60 min × cost/10,000 SL)
   = 60 × 60 × $0.25/1,000 (= 1,698 × 60 × $0.089/10,000)
   = $0.90/hour
   = $0.90/hr. is $36.00/week and
   = $1,872.00/year savings ***for One nozzle!***

EXAIR_Cat36_25_FROMINDESIGN.indb 53 12/20/24 3:46 PM

Air Nozzles

How Air Nozzles Work



Air Nozzles use the Coanda effect to amplify compressed airflow up to 25 times or more. As illustrated on the left, compressed air (black arrows) is ejected through a series of nozzles on the outer perimeter. As the air travels along the outer wall of the nozzle, surrounding air (blue arrows) is entrained into the stream. The airstream that results is a high volume, high velocity blast of air **at minimal consumption.** The air is always ejected so it can vent safely, **well below OSHA dead end pressure requirements**, should the nozzle end be blocked.

Selecting The Right Air Nozzle

EXAIR manufactures a wide selection of Air Nozzles and Jets, which are divided into two groups. The first group includes Air Nozzles and Jets that deliver force up to 22 ounces (624 grams) and are suitable for most applications. The second group includes Air Nozzles that produce high force up to 23 lbs (10.43 kg) where additional reach and force are required.

- **Type 303 Stainless Steel-** high temperatures and corrosive environments. Max temp 800°F (426°C)
- **Type 316 Stainless Steel-** high temperatures, corrosive environments, and mechanical wear. Max temp 1000°F (538°C)
- **Brass-** general purpose applications. Max temp 400°F (204°C)
- **Zinc aluminum alloy-** general purpose applications. Max temp 250°F (121°C)
- **PEEK-** replaces metals in harsh environments. Offers chemical resistance, non-marring. Max temp 320°F (160°C)

Air Nozzles And Jets Comparison (sorted by compressed air consumption at 80 PSIG (5.5 BAR))

Model	Material	Description	Inlet	Air Consumption		Force		Sound Level dBA	More Details
				SCFM	SLPM	Ozs	Grams		
1108SS	Stainless Steel - Type 316	Atto Super Air Nozzle	M4 x 0.5	2.5	71	2.0*	57	58	p. 55
1108-PEEK	PEEK (Plastic)	Atto Super Air Nozzle	M4 x 0.5	2.5	71	2.0*	57	58	p. 55
1108SS-NPT	Stainless Steel - Type 316	Atto Super Air Nozzle	1/8 MNPT	2.5	71	2.0*	57	58	p. 55
1108-PEEK-NPT	PEEK (Plastic)	Atto Super Air Nozzle	1/8 MNPT	2.5	71	2.0*	57	58	p. 55
1109SS	Stainless Steel - Type 316	Pico Super Air Nozzle	M5 x 0.5	4.9	139	5.0*	142	68	p. 55
1109-PEEK	PEEK (Plastic)	Pico Super Air Nozzle	M5 x 0.5	4.9	139	5.0*	142	68	p. 55
1109SS-NPT	Stainless Steel - Type 316	Pico Super Air Nozzle	1/8 MNPT	4.9	139	5.0*	142	68	p. 55
1109-PEEK-NPT	PEEK (Plastic)	Pico Super Air Nozzle	1/8 MNPT	4.9	139	5.0*	142	68	p. 55
1110SS	Stainless Steel - Type 316	Nano Super Air Nozzle	M6 x 0.75	8.3	235	8.1*	230	75	p. 55
1110-PEEK	PEEK (Plastic)	Nano Super Air Nozzle	M6 x 0.75	8.3	235	8.1*	230	75	p. 55
1110SS-NPT	Stainless Steel - Type 316	Nano Super Air Nozzle	1/8 MNPT	8.3	235	8.1*	230	75	p. 55
1110-PEEK-NPT	PEEK (Plastic)	Nano Super Air Nozzle	1/8 MNPT	8.3	235	8.1*	230	75	p. 55
1001	Brass	Safety Air Nozzle	1/8 FNPT	10	283	9*	255	78	p. 60
1102	Zinc Aluminum alloy	Mini Super Air Nozzle	1/8 FNPT	10	283	9*	255	71	p. 56
1102-PEEK	PEEK (Plastic)	Mini Super Air Nozzle	1/8 FNPT	10	283	9*	255	71	p. 56
1102SS	Stainless Steel - Type 316	Mini Super Air Nozzle	1/8 FNPT	10	283	9*	255	71	p. 56
1103	Zinc Aluminum alloy	Mini Super Air Nozzle	1/8 MNPT	10	283	9*	255	71	p. 56
1103SS	Stainless Steel - Type 316	Mini Super Air Nozzle	1/8 MNPT	10	283	9*	255	71	p. 56
1126	Zinc Aluminum alloy	1" Flat Super Air Nozzle	1/8 FNPT	10.5	297	9.8†	278	75	p. 57
1126SS	Stainless Steel - Type 316	1" Flat Super Air Nozzle	1/8 FNPT	10.5	297	9.8†	278	75	p. 57
1010SS	Stainless Steel - Type 303	Micro Air Nozzle	1/8 MNPT	13	368	12*	340	80	p. 55
1009	Aluminum	Adjustable Air Nozzle	1/8 MNPT	13	368	12**	340	79	p. 60
1009SS	Stainless Steel - Type 303	Adjustable Air Nozzle	1/8 MNPT	13	368	12**	340	79	p. 60
1100	Zinc Aluminum alloy	Super Air Nozzle	1/4 FNPT	14	396	13*	369	74	p. 56
1100-PEEK	PEEK (Plastic)	Super Air Nozzle	1/4 FNPT	14	396	13*	369	74	p. 56
1100SS	Stainless Steel - Type 316	Super Air Nozzle	1/4 FNPT	14	396	13*	369	74	p. 56
1101	Zinc Aluminum alloy	Super Air Nozzle	1/4 MNPT	14	396	13*	369	74	p. 56
1101SS	Stainless Steel - Type 316	Super Air Nozzle	1/4 MNPT	14	396	13*	369	74	p. 56
1002	Brass	Safety Air Nozzle	1/4 FNPT	17	481	16*	454	80	p. 60
1002SS	Stainless Steel - Type 303	Safety Air Nozzle	1/4 FNPT	17	481	16*	454	80	p. 60
1003	Brass	Safety Air Nozzle	3/8 FNPT	18	509	18*	510	83	p. 60
6019	Brass	Adjustable Air Jet	1/8 MNPT	18	509	16***	454	83	p. 61
6019SS	Stainless Steel – Type 303	Adjustable Air Jet	1/8 MNPT	18	509	16***	454	83	p. 61
6013	Brass	High Velocity Air Jet	1/8 MNPT	22	622	20†	567	82	p. 61
6013SS	Stainless Steel – Type 303	High Velocity Air Jet	1/8 MNPT	22	622	20†	567	82	p. 61
1122	Zinc Aluminum alloy	2" Flat Super Air Nozzle	1/4 FNPT	22	622	22†	624	77	p. 57
1122SS	Stainless Steel - Type 316	2" Flat Super Air Nozzle	1/4 FNPT	22	622	22†	624	77	p. 57
1144	Zinc Aluminum/Steel	2" Super Air Scraper	1/4 FNPT	22	622	22†	624	77	p. 57
1004SS	Stainless Steel - Type 316	Back Blow Air Nozzle	M4 x 0.5	4.5	127	NA	NA	75	p. 59
1006SS	Stainless Steel - Type 316	Back Blow Air Nozzle	1/4 FNPT	22	622	NA	NA	80	p. 59

For High Force Air Nozzles, see page 63.

FNPT = NPT Female
MNPT = NPT Male.

* Force measured at 12" (305mm) from target.
** Force measured at 12" (305mm) from target with a .008" (0.20mm) factory setting.
*** Force measured at 12" (305mm) from target with a .006" (0.15mm) factory setting.

All sound levels measured at 3 feet (914mm).
All measurements taken at 80 PSIG (5.5 BAR).
† Force measured at 12" (305mm) from target with a .015" (0.38mm) shim installed.

For Technical Assistance, Call an EXAIR Application Engineer 1-800-903-9247
Toll Free FAX (866) 329-3924 • E-mail: techelp@exair.com • www.exair.com

An INTELLIGENT COMPRESSED AIR® Product

Atto Super Air Nozzles™


(actual size)

Model 1108SS M4 x 0.5
Material: Type 316 Stainless Steel
Model 1108-PEEK M4 x 0.5
Material: PEEK (plastic)



Model 1108SS-NPT 1/8 NPT male
Material: Type 316 Stainless Steel
Model 1108-PEEK-NPT 1/8 NPT male
Material: PEEK (plastic)

Model 1108SS, 1108-PEEK, 1108SS-NPT, 1108-PEEK-NPT Atto Super Air Nozzle

EXAIR's Atto Super Air Nozzle delivers the smallest, most precise blowoff. The air pattern for this tiny nozzle is focused, measuring 1.0" in diameter when positioned 6" away from the surface. The 58 dBA noise level is a fraction of ordinary air nozzles.

Air Consumption		Force*		Sound Level
SCFM	SLPM	Ozs	Grams	dBA
2.5	71	2.0	57	58

* Force measured at 12" (305mm) from target.
Sound level measured at 3' (914mm).
All measurements taken at 80 PSIG (5.5 BAR).

Pico Super Air Nozzles™


(actual size)

Model 1109SS M5 x 0.5
Material: Type 316 Stainless Steel
Model 1109-PEEK M5 x 0.5
Material: PEEK (plastic)



Model 1109SS-NPT 1/8 NPT male
Material: Type 316 Stainless Steel
Model 1109-PEEK-NPT 1/8 NPT male
Material: PEEK (plastic)

Model 1109SS, 1109-PEEK, 1109SS-NPT, 1109-PEEK-NPT Pico Super Air Nozzle

EXAIR's Pico Super Air Nozzle delivers a precise blowoff with a highly focused, forceful blast of airflow. The narrowly focused air pattern measures 1.3" in diameter at 6" away from the surface. The noise level is only 68 dBA.

Air Consumption		Force*		Sound Level
SCFM	SLPM	Ozs	Grams	dBA
4.9	139	5.0	142	68

* Force measured at 12" (305mm) from target.
Sound level measured at 3' (914mm).
All measurements taken at 80 PSIG (5.5 BAR).

Nano Super Air Nozzles™


(actual size)

Model 1110SS M6 x 0.75
Material: Type 316 Stainless Steel
Model 1110-PEEK M6 x 0.75
Material: PEEK (plastic)



Model 1110SS-NPT 1/8 NPT male
Material: Type 316 Stainless Steel
Model 1110-PEEK-NPT 1/8 NPT male
Material: PEEK (plastic)

Model 1110SS, 1110-PEEK, 1110SS-NPT, 1110-PEEK-NPT Nano Super Air Nozzle

EXAIR's Nano Super Air Nozzle delivers a highly focused, forceful blast of airflow. The air pattern for this small nozzle measures 1.5" in diameter at 6" away from the surface. The noise level is a low 75 dBA. Overall length measures only 0.78".

Air Consumption		Force*		Sound Level
SCFM	SLPM	Ozs	Grams	dBA
8.3	235	8.1	230	75

* Force measured at 12" (305mm) from target.
Sound level measured at 3' (914mm).
All measurements taken at 80 PSIG (5.5 BAR).

Micro Air Nozzle™


(actual size)

Model 1010SS 1/8 NPT male
Material: Type 303 Stainless Steel

Model 1010SS Micro Air Nozzle

EXAIR's Micro Air Nozzle optimizes entrainment for a directed, high volume, high velocity airflow. The compact size permits mounting where space is limited. Sound level and air consumption are low.

Air Consumption		Force*		Sound Level
SCFM	SLPM	Ozs	Grams	dBA
13	368	12	340	80

* Force measured at 12" (305mm) from target.
Sound level measured at 3' (914mm).
All measurements taken at 80 PSIG (5.5 BAR).

The Air Nozzles and Jets shown on pages 55 – 61 deliver up to 22 ounces (624 grams) of force, making them suitable for most applications. All models shown use a small amount of compressed air to entrain large volumes of surrounding room air. They have been engineered to provide the best performance with low sound levels and high efficiency.

Dimensions and Airflow Patterns

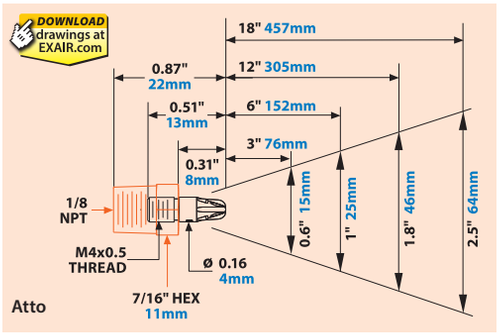

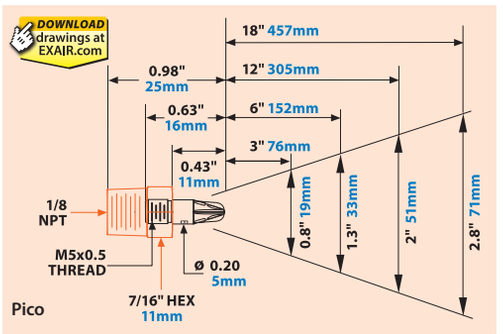

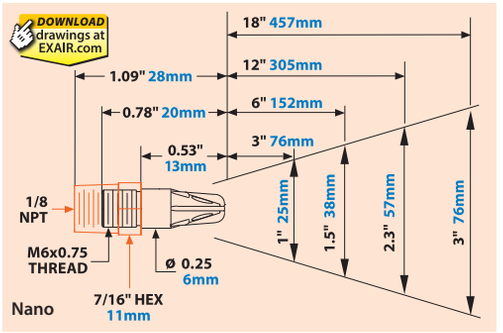

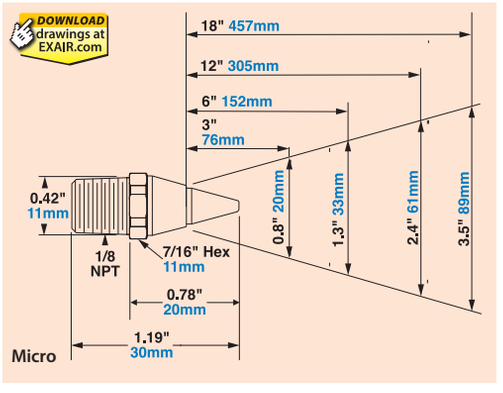

EXAIR_Cat36_25_FROMINDESIGN.indb 55 12/20/24 3:46 PM

Air Nozzles

Mini Super Air Nozzles™



Model 1102 1/8 NPT female
Material: Zinc Aluminum alloy
Model 1102-PEEK 1/8 NPT female
Material: PEEK (plastic)
Model 1102SS 1/8 NPT female
Material: Type 316 Stainless Steel



Model 1103 1/8 NPT male
Material: Zinc Aluminum alloy
Model 1103SS 1/8 NPT male
Material: Type 316 Stainless Steel

Model 1102, 1102-PEEK, 1102SS, 1103 and 1103SS Mini Super Air Nozzles

The 1/8 NPT Mini Super Air Nozzles provide a forceful, concentrated stream of high velocity airflow. It has fewer holes than the larger Super Air Nozzles, resulting in lower sound levels, air consumption and force.

Air Consumption		Force*		Sound Level
SCFM	SLPM	Ozs	Grams	dBA
10	283	9	255	71

* Force measured at 12" (305mm) from target.
Sound level measured at 3' (914mm).
All measurements taken at 80 PSIG (5.5 BAR).

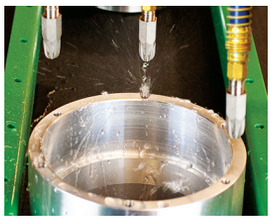

Super Air Nozzles with Stay Set Hoses provide adjustability and precision.

Dimensions and Airflow Pattern

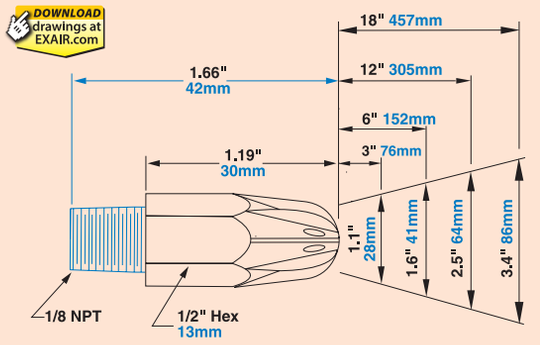

Super Air Nozzles™



Model 1100 1/4 NPT female
Material: Zinc Aluminum alloy
Model 1100SS 1/4 NPT female
Material: Type 316 Stainless Steel



Model 1100-PEEK 1/4 NPT female
Material: PEEK (plastic)



Model 1101 1/4 NPT male
Material: Zinc Aluminum alloy
Model 1101SS 1/4 NPT male
Material: Type 316 Stainless Steel



The aerodynamic design of the Model 1100 Super Air Nozzle directs air to a single point of convergence.

Model 1100, 1100SS, 1100-PEEK, 1101 and 1101SS Super Air Nozzles

EXAIR's award winning Super Air Nozzles deliver high performance suitable for a wide range of blowoff, drying and cooling applications. The aerodynamic design of this engineered Super Air Nozzle directs the air to a single point of convergence, delivering hard-hitting force. It dramatically reduces air consumption and, in many cases, can cut the noise level in half. All Super Air Nozzles eject the compressed air through holes located in recessed grooves that cannot be blocked or dead ended.

Air Consumption		Force*		Sound Level
SCFM	SLPM	Ozs	Grams	dBA
14	396	13	369	74

* Force measured at 12" (305mm) from target.
Sound level measured at 3' (914mm).
All measurements taken at 80 PSIG (5.5 BAR).

Dimensions and Airflow Pattern

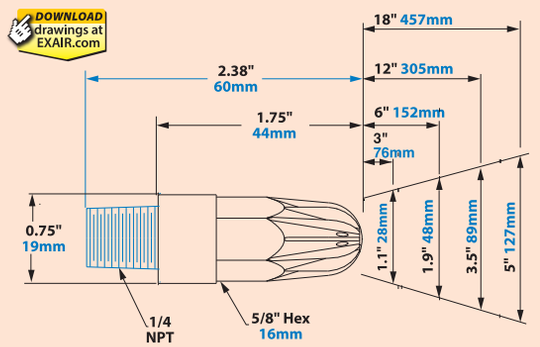

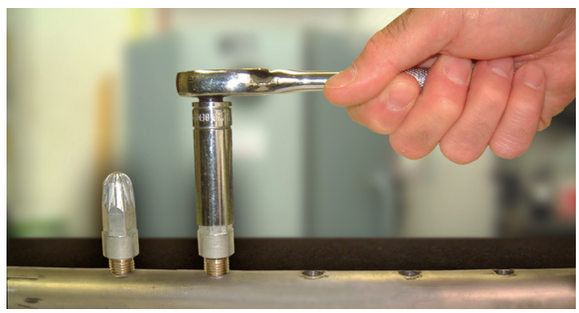

Most EXAIR Air Nozzles have a standard hex base making them easy to install with a socket wrench.



Build Your Own System

EXAIR's Swivel Fittings, available for all our nozzles up to 1 NPT, make it easy to adjust the aim of the Air Nozzles and Jets. Correct placement of the blowing angle can help optimize performance, reduce noise levels and improve efficiency. See page 68 for details.

Swivel Fittings can be added to most EXAIR Nozzles by adding a "W" to the Model#.

1122 (2" Flat Super Air Nozzle)
+ W (Swivel Fitting)
1122W

EXAIR_Cat36_25_FROMINDESIGN.indb 56 12/20/24 3:46 PM

An INTELLIGENT COMPRESSED AIR® Product

Flat Super Air Nozzles™



Model 1126 1/8 NPT female
Material: Zinc Aluminum alloy
Model 1126SS 1/8 NPT female
Material: Type 316 Stainless Steel

Shim sets for the 1" Flat Super Air Nozzles include a .005" (0.13mm), .010" (0.25mm), and .020" (0.51mm) thick shim.

1136SS	Stainless Steel 1" Flat Super Air Nozzle Shim Set

Model 1126, 1126SS, 1122 and 1122SS 1" and 2" Flat Super Air Nozzles

EXAIR's 1" and 2" Flat Super Air Nozzles are highly efficient, unique flat air nozzles. Their patented† design uses a special shim to maintain the critical position of the component parts. A precise amount of air is released through the thin slot, across a flat surface. The result is a wide, forceful stream of high velocity, laminar airflow with minimal air consumption and noise.

†Patent #5402938

	Air Consumption		Force *		Sound Level
Model	SCFM	SLPM	Ozs	Grams	dBA
1126/1126SS	10.5	297	9.8	278	75

* Force measured at 12" (305mm) from target.
Sound level measured at 3' (914mm).
All measurements taken at 80 PSIG (5.5 BAR)
.015" (0.38mm) shim installed.



The 1" and 2" Flat Super Air Nozzles are shipped with a .015" (0.38mm) air gap opening that is set with a stainless steel shim positioned between the cap and the body. Force and flow may be easily increased or decreased by installing a different shim.

Model 1122 1/4 NPT female
Material: Zinc Aluminum alloy
Model 1122SS 1/4 NPT female
Material: Type 316 Stainless Steel

Shim sets for the 2" Flat Super Air Nozzles include a .005" (0.13mm), .010" (0.25mm), and .020" (0.51mm) thick shim.

1132SS	Stainless Steel 2" Flat Super Air Nozzle Shim Set

	Air Consumption		Force *		Sound Level
Model	SCFM	SLPM	Ozs	Grams	dBA
1122/1122SS	21.8	622	22	624	77

* Force measured at 12" (305mm) from target.
Sound level measured at 3' (914mm).
All measurements taken at 80 PSIG (5.5 BAR).
.015" (0.38mm) shim installed.

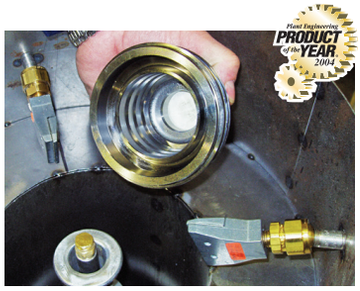

2" Flat Super Air Nozzles blow off metal parts as they are lifted through a vacuum chamber.

1" Flat Super Air Nozzle Airflow Pattern

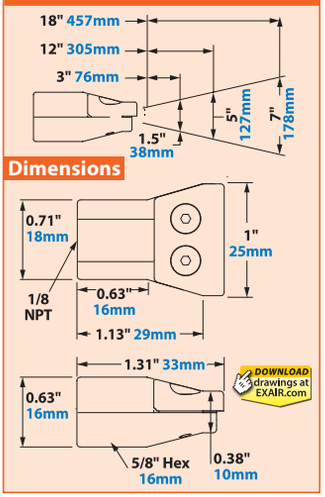

2" Flat Super Air Nozzle Airflow Pattern

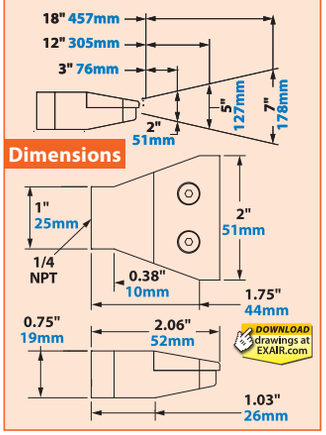

Super Air Scraper™



Model 1144 1/4 NPT female
Material: Zinc Aluminum alloy/Steel

Shim sets for the 2" Flat Super Air Nozzles include a .005" (0.13mm), .010" (0.25mm), and .020" (0.51mm) thick shim.

1132SS	Stainless Steel 2" Flat Super Air Nozzle Shim Set

Model 1144 2" Super Air Scraper

EXAIR's 2" Super Air Scraper is a patented nozzle† used to eliminate stubborn debris from work or machine surfaces. This 2" flat nozzle utilizes a corrosion resistant scraper blade to provide the needed leverage to get underneath and scrape away fixed debris before the air can remove it from a surface. Applications include removal of tape, gaskets, adhesive, labels and stickers, grease, paint and sealant. A scraper nozzle can assist in cleaning sub plates, machining tables and difficult to sweep metal chips, flakes or discs. They are ideal when used as a Soft Grip Super Air Scraper (see page 123).

†Patent #10,779,698

	Air Consumption		Force *		Sound Level
Model	SCFM	SLPM	Ozs	Grams	dBA
1144	21.8	622	22	624	77

* Force measured at 12" (305mm) from target.
Sound level measured at 3' (914mm).
All measurements taken at 80 PSIG (5.5 BAR).
.015" (0.38mm) shim installed.



2" Super Air Scraper can eliminate stubborn debris.

2" Super Air Scraper Airflow Pattern

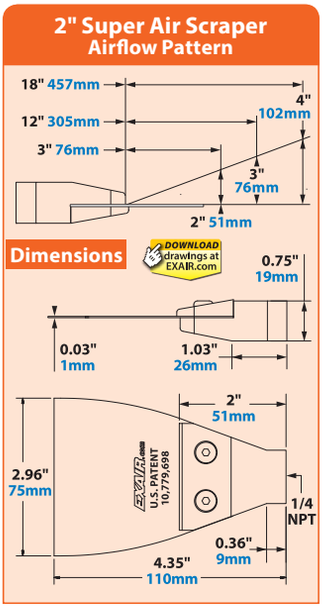

†Patent #10,779,698

EXAIR_Cat36_25_FROMINDESIGN.indb 57 12/20/24 3:46 PM

EXAIR® Blows Away the Competition!



Save Over $1,200 Per Year By Replacing One Outdated Air Nozzle!

We've all seen flat air nozzles. Some are yellow. Others are orange. The oldest ones are blue or metal. Those other manufacturers want you to believe you'll save money by conserving compressed air while protecting your workers from harmful noise levels. In reality, those colorful air nozzles that blow the air out of holes consume enormous amounts of air. The plastic ones often break off. Some might even get you an OSHA fine due to the dangerous dead ended pressures that exist if someone blocks the air exhaust.

EXAIR's award winning **2" Flat Super Air Nozzle™** has been engineered to replace those outdated flat nozzles. There are no dangerous holes that can be blocked. EXAIR's patented, award winning design is efficient, maintaining a precise amount of airflow through a thin slot. The result is a forceful stream of high velocity, laminar airflow with minimal air consumption and noise. You can increase or decrease the force of each flat air nozzle – using shims to tune it to the application so you'll never waste compressed air. EXAIR also offers a **1" Flat Super Air Nozzle™,** with the same laminar airflow, to fit in tighter spaces.

Flat nozzles from other manufacturers can consume over 30 SCFM (a refrigerator sized compressor) and aren't adjustable. Some manufacturers offer different flow rates but you need to guess at which one will do the job since you can't adjust them once you've made the purchase. By default, most users feel bigger is better and go with the highest flow rate, wasting compressed air. See page 57 for more details.



EXAIR's 2" Flat Super Air Nozzle	Theirs (Old Technology)
• 2004 Product Of The Year Winner	• Can consume over 30 SCFM
• Your choice of zinc/aluminum or Type 316 stainless steel	• Expensive – metal or plastic
• Flexible Stay Set Hoses™, swivel fittings and magnetic bases are available	• No easy adjustment – wasted compressed air
• Meets or exceeds OSHA standards	• May not be OSHA safe
• Quietest flat nozzle available	• Significantly louder
• Easy to change the force and flow	• Plastic is easily broken

Here's how:

- One popular flat nozzle consumes 31 SCFM @ 80 PSIG.
- EXAIR's 2" Flat Super Air Nozzle with .015" shim consumes 21.8 SCFM @ 80 PSIG.
- 31 SCFM (theirs) – 21.8 SCFM (EXAIR's) = 9.2 SCFM compressed air saved.

Most large plants know their cost per 1,000 standard cubic feet of compressed air. If you don't know your actual cost per 1,000 SCF, 25¢ is a reasonable average to use.

- SCFM saved × 60 minutes × cost/1,000 SCF = dollars saved per hour.
- In this case, 9.2 SCFM × 60 × .25/1,000 SCF= ***13.8 cents saved per hour.***
- 13.8 cents per hour × 24 hours = ***$3.31 saved per day.***
- $3.31 per day × 365 days = ***$1,208.88 saved in one year*** (in this 24/7 operation).

And, This Savings Is For One Nozzle!

Air Nozzle	Air Consumption @ 80 PSIG	Noise Level dBA	lbs. of Force @ 80 PSIG
Yellow	29 SCFM	83	1.7
Orange	28 SCFM	82	1.7
Blue	26 SCFM	78	1.5
Metal (machined)	29 SCFM	82	1.7
Metal (cast)	31 SCFM	80	1.9
EXAIR 2" Flat Super Air Nozzle	***7.3- 30 SCFM**	**62-81**	**0.5 – 1.9**

*Air consumption dependent upon shim size.

EXAIR's 2" Flat Super Air Nozzle can pay for itself in less than 27 days.

Put the 2" Flat Super Air Nozzle to work in your blowoff, cooling or drying application. We're sure you'll agree that it blows away the competition!

EXAIR
For Technical Assistance, Call an EXAIR Application Engineer 1-800-903-9247
Toll Free FAX (866) 329-3924 • E-mail: techelp@exair.com • www.exair.com
EXAIR BLOG

EXAIR_Cat36_25_FROMINDESIGN.indb 58 12/20/24 3:46 PM

An INTELLIGENT COMPRESSED AIR® Product

M4 Back Blow Air Nozzle



Model 1004SS M4 × 0.5
Material: Type 316 Stainless Steel

Model 1004SS Back Blow Air Nozzle

EXAIR's M4 Back Blow Air Nozzle delivers the smallest, most effective airflow for cleaning out small diameter tubes, pipes, channels or holes. Its forceful airflow can be used on diameters as small as 1/4" (6.3mm) and up to 1" (25.4mm). Extensions for reaching farther into a pipe, tube, hose, channel or hole are available.

	Air Consumption		Sound Level*	Use With:
Model	SCFM	SLPM	dBA	Inside Diameters
1004SS	4.5	127	75	1/4" - 1" (6.3-25.4mm)

* Sound level measured at 3' (914mm).
All measurements taken at 80 PSIG (5.5 BAR).

Dimensions and Airflow Pattern

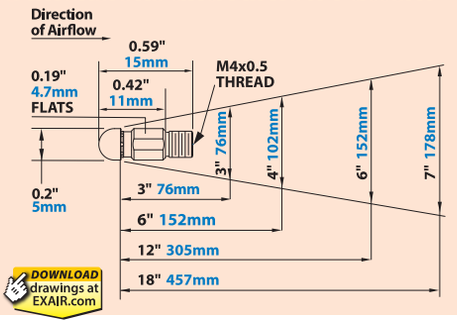

1/4 NPT Back Blow Air Nozzle



Model 1006SS 1/4 NPT female
Material: Type 316 Stainless Steel

Model 1006SS Back Blow Air Nozzle

The 1/4 NPT Back Blow Air Nozzle delivers high performance suitable for a wide range of diameters. Recommended diameter range is 7/8"- 4" (22-102mm). A large variety of extensions for reaching farther into a pipe, tube, hose, channel or hole are available.

	Air Consumption		Sound Level*	Use With:
Model	SCFM	SLPM	dBA	Inside Diameters
1006SS	22	622	80	7/8"– 4" (22–102mm)

* Sound level measured at 3' (914mm).
All measurements taken at 80 PSIG (5.5 BAR).

2015 Plant Engineering PRODUCT of the YEAR Bronze Award

Dimensions and Airflow Pattern

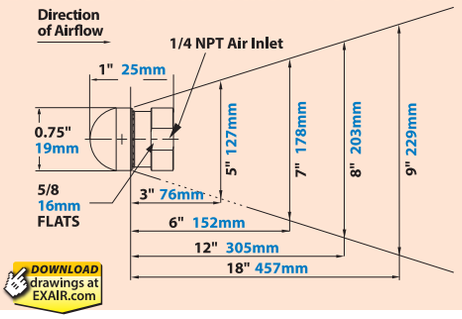

1 NPT Back Blow Air Nozzle



Model 1008SS 1 NPT female
Material: Type 316 Stainless Steel

Model 1008SS Back Blow Air Nozzle

EXAIR's largest Back Blow Air Nozzle produces the greatest force for stubborn, sticky materials which may be inside of pipes, tubes, channels or holes. It is capable of reaching into diameters from 2"-16" (51-406mm) so it can handle small and large diameters. Extensions are available.

	Air Consumption		Sound Level*	Use With:
Model	SCFM	SLPM	dBA	Inside Diameters
1008SS	57	1,614	89	2" - 16" (51-406mm)

* Sound level measured at 3' (914mm).
All measurements taken at 80 PSIG (5.5 BAR).

Dimensions and Airflow Pattern

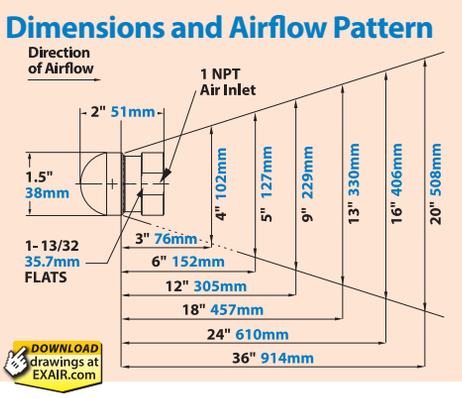



Chip Shields should be used to protect operators from debris. A Model 901650 Chip Shield is for M4 × 0.5 extensions and a Model 901222 is available for 1/4 NPT extensions.

Aluminum Extension Pipe

Extensions provide the necessary reach to clean out your pipe, tube, hose or channel. Available up to 72" (1829mm) long.

Model	Description
9492	6" (152mm) Aluminum, M4 × 0.5
9493	12" (305mm) Aluminum, M4 × 0.5
9495	24" (610mm) Aluminum, M4 × 0.5
9497	36" (914mm) Aluminum, M4 × 0.5
9188	12" (305mm) Aluminum, 1/4 NPT
9189	18" (457mm) Aluminum, 1/4 NPT
9190	24" (610mm) Aluminum, 1/4 NPT
9191	36" (914mm) Aluminum, 1/4 NPT
9192	48" (1219mm) Aluminum, 1/4 NPT
9193	60" (1524mm) Aluminum, 1/4 NPT
9194	72" (1829mm) Aluminum, 1/4 NPT
900353	12" (305mm) Aluminum, 1 NPT
901254	36" (914mm) Aluminum, 1 NPT
901259	72" (1829mm) Aluminum, 1 NPT

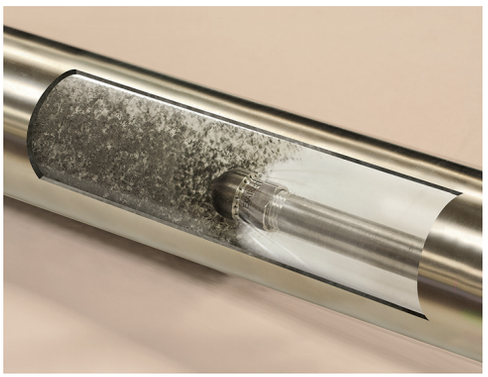

A Back Blow Air Nozzle cleans chips and coolant from inside a machined pipe.

EXAIR_Cat36_25_FROMINDESIGN.indb 59 12/20/24 3:46 PM

Safety Air Nozzles

Safety Air Nozzles



Model 1001 1/8 NPT female
Material: Brass

Model 1002 1/4 NPT female
Material: Brass

Model 1002SS 1/4 NPT female
Material: Type 303 Stainless Steel

Model 1003 3/8 NPT female
Material: Brass

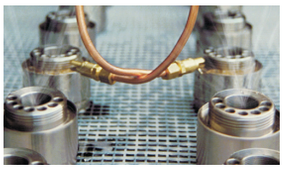

Oddly shaped parts often require a combination of Safety Nozzles for blowoff.

Model 1001, 1002, 1002SS and 1003 Safety Air Nozzles

Safety Air Nozzles eject a small amount of compressed air 360° around the outer ring that combines with the air ejected from the center hole to produce a high volume, high velocity blast of air. The slotted end allows air to vent safely should the nozzle end be blocked.

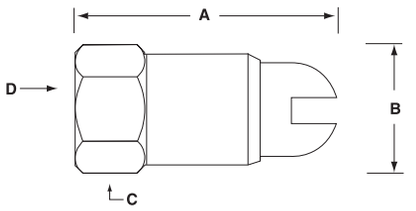

Air Consumption			Force*		Sound Level
Model	SCFM	SLPM	Ozs	Grams	dBA
1001	10	283	9	255	78
1002	17	481	16	454	80
1002SS	17	481	16	454	80
1003	18	509	18	510	83

* Force measured at 12" (305mm) from target.
Sound level measured at 3' (914mm).
All measurements taken at 80 PSIG (5.5 BAR).

Dimensions		A	B	C	D
Model				Hex	Inlet
1001	in	1.19	0.38	1/2	1/8 NPT
	mm	30	10	13	
1002 1002SS	in	1.44	0.50	5/8	1/4 NPT
	mm	37	13	16	
1003	in	1.65	0.63	3/4	3/8 NPT
	mm	42	16	19	

Airflow Pattern

DOWNLOAD drawings at EXAIR.com

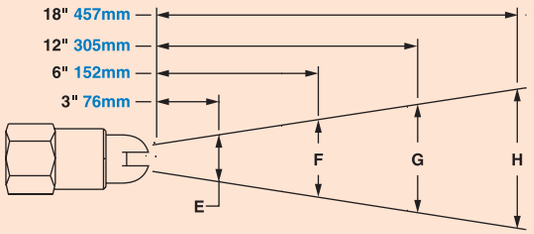

Model		E	F	G	H
1001	in	1.1	2.1	4.1	6.0
	mm	28	53	104	152
1002 1002SS	in	1.3	2.3	4.4	6.5
	mm	33	58	112	165
1003	in	1.3	2.4	4.7	7.0
	mm	33	61	119	178

EXAIR® EFFICIENCYLAB

Contact an Application Engineer at 1-800-903-9247.

Send in your air nozzle for the Award Winning EXAIR Efficiency Lab Service

We will test your existing product for air use, noise and force. We'll compare it to our Intelligent Compressed Air® products and provide a full report to help improve your process.

Adjustable Air Nozzles

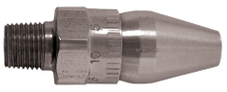

Model 1009 1/8 NPT male
Material: Aluminum

Model 1009SS 1/8 NPT male
Material: Type 303 Stainless Steel

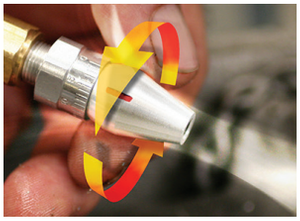

Adjustable Air Nozzles are perfect for a variety of blowoff applications.

Model 1009 and 1009SS Adjustable Air Nozzles

Adjustable Air Nozzles are suitable for a wide variety of blowoff applications. The design allows you to "tune in" the force and flow to the application requirements, thereby minimizing air consumption. A micrometer-like dial indicates the gap setting. A set screw in the end can be tightened so the air nozzle holds the setting.

Air Consumption		Force*		Sound Level
SCFM	SLPM	Ozs	Grams	dBA
13	368	12	340	79

* Force measured at 12" (305mm) from target with a .008" (0.20mm) factory setting.
Sound level measure d at 3' (914mm).
All measurements taken at 80 PSIG (5.5 BAR).

Dimensions and Airflow Pattern

DOWNLOAD drawings at EXAIR.com

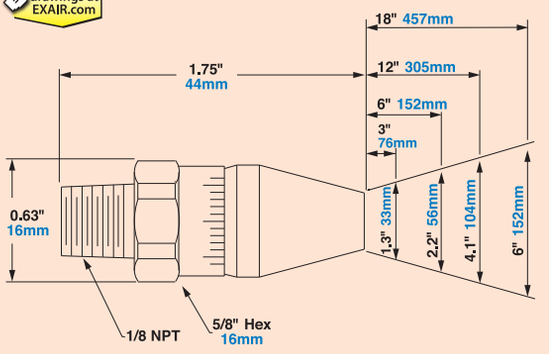

EXAIR_Cat36_25_FROMINDESIGN.indb 60 12/20/24 3:46 PM

An INTELLIGENT COMPRESSED AIR® Product

How Air Jets Work

Air Jets utilize the Coanda effect (wall attachment of a high velocity fluid) to produce air motion in their surroundings. As illustrated on the right, a small amount of compressed air (black arrows) is throttled through an internal ring nozzle above sonic velocity. A vacuum is produced, pulling large volumes of surrounding, or "free" air, through the jet (blue arrows). **Both the outlet and inlet can be ducted for remote positioning. If the end is blocked, flow simply reverses at well below OSHA dead end pressure requirements.**

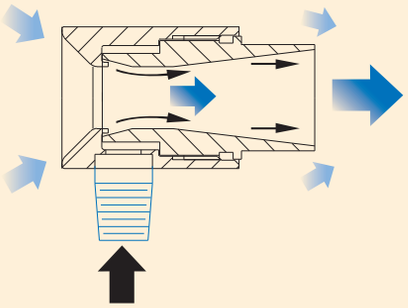

High Velocity Air Jets



Model 6013 1/8 NPT male
Material: Brass
Max Temp: 275°F (135°C)



Model 6013SS 1/8 NPT male
Material: Type 303 Stainless Steel
Max Temp: 400°F (204°C)

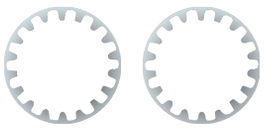

Material: Type 303 Stainless Steel

Model 6013 and 6013SS High Velocity Air Jets

Provides maximum thrust with a confined, directed airstream. It is the best choice for part ejection, chip removal, and part drying.

Shim Sets: Shims can be used to change the gap on the Model 6013 and 6013SS High Velocity Air Jet.

Air Consumption		Force*		Sound Level
SCFM	SLPM	Ozs	Grams	dBA
22	622	20	567	82

* Force measured at 12" (305mm) from target with a .015" (0.38mm) shim installed.
Sound level measured at 3' (914mm).
All measurements taken at 80 PSIG (5.5 BAR).

The Model 6313 Air Jet Shim Set for the High Velocity Air Jet includes a .006" (0.15mm) and a .009" (0.23mm) thick shim. A .015" (0.38mm) shim comes installed with the Model 6013 and 6013SS Air Jet.

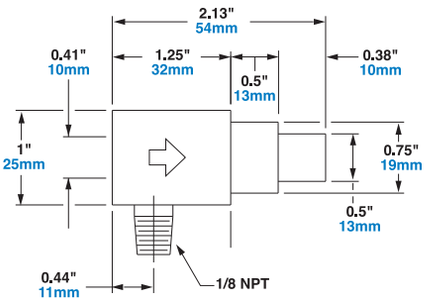

Airflow Pattern

DOWNLOAD drawings at EXAIR.com

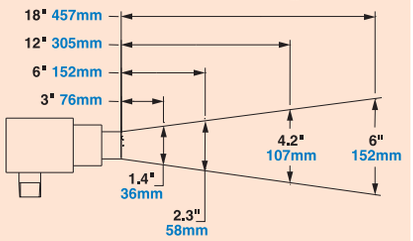

Adjustable Air Jets



Model 6019 1/8 NPT male
Material: Brass
Max Temp: 275°F (135°C)



Model 6019SS 1/8 NPT male
Material: Type 303 Stainless Steel
Max Temp: 400°F (204°C)

Model 6019 and 6019SS Adjustable Air Jets

This is an adjustable version of the Model 6013 High Velocity Air Jet. Airflow and thrust are easily adjusted using the micrometer gap indicator.

Air Consumption		Force*		Sound Level
SCFM	SLPM	Ozs	Grams	dBA
18	509	16	454	83

* Force measured at 12" (305mm) from target with a .006" (0.15mm) setting.
Sound level measured at 3' (914mm).
All measurements taken at 80 PSIG (5.5 BAR).

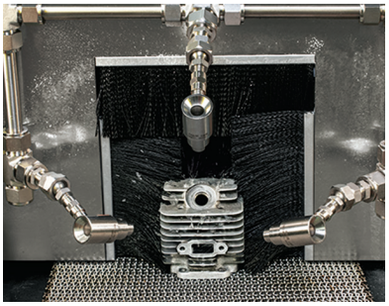

A combination of Model 6013SS High Velocity Air Jets dry this chainsaw cylinder head.

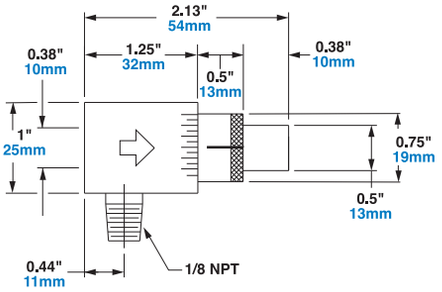

Airflow Pattern

DOWNLOAD drawings at EXAIR.com

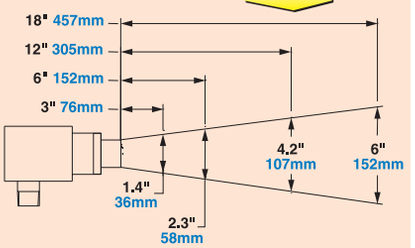

EXAIR_Cat36_25_FROMINDESIGN.indb 61 12/20/24 3:46 PM

How Much Air Does It Really Use?

The amount of compressed air wasted by copper tubes, drilled pipe and other compressed air blowoffs can easily cost thousands of dollars per year. To quantify it, air consumption can be translated into electrical energy use. One horsepower of compressor (746 Watts) generates 4 to 5 SCFM (113 to 142 SLPM). The SCFM (SLPM) output depends on the efficiency of the compressor. Wasteful blowoffs can drain the compressed air system where a plant will experience frequent and sizeable pressure drops. The lack of air can be eliminated when the inefficient blowoffs are replaced.

Efficient products like EXAIR's engineered Super Air Nozzles are quiet while being capable of pulling in 25 parts of room air for every one part of compressed air. Companies who want to "Go Green" and minimize compressed air use should listen for the loud compressed air noise in their plant. Once the noisy blowoff is located, EXAIR's Digital Sound Level Meter (shown on page 17) can isolate the source and measure the sound level. Replacing one drilled pipe or other homemade blowoff with one Super Air Nozzle can amount to a large air savings. Here's a typical example:



EXAIR's Digital Sound Level Meter detects the source of high noise. (See page 17)



A Steel Plant Reduces Air Use by 59%

A steel plant was using open ended pipes on their cold rolled process to blow away a dense fog of oil vapor so the operator could see the process. Each pipe consumed 195 SCFM (5,521 SLPM) of compressed air. With only a 3:1 air amplification ratio, the open ended pipe did a poor job of clearing the fog. The pipes were dangerous since they could potentially be dead ended (an OSHA violation). Even with hearing protection, workers complained that it was loud.

They installed **(2) Model 1106 1/2 NPT Stainless Steel Super Air Nozzles** with **Model 9069 Swivel Fittings** (to aim them) to blow the fog across the 6' (1.8m) width. The Super Air Nozzles completely cleared the fog and the workers complimented the significant noise drop. **Each open pipe that used to consume 195 SCFM (5,521 SLPM) was reduced to only 60 SCFM (1,699 SLPM) when the Super Air Nozzles were installed.**

Before



After





Digital Flowmeter with USB Data Logger are available. See pages 10-16 for full details.

Compressed air products should not be used at pressures higher than indicated by the manufacturer since this wastes air. When looking for places to conserve air, it is important to measure the air consumption of everything connected to the compressed air supply rather than relying on the numbers printed in a manufacturer's literature. Some manufacturers of compressed air products understate the air consumption of their products. It is hard to say if it is done intentionally or in error. One possibility is that their flow meter has not been regularly calibrated. Another reason could be a failure to properly use their flow meter.

Most flow meter manufacturers require that any measurement made on their meter be multiplied by a correction factor in order to get the exact air consumption measurement. This takes into account the conditions under which the flow meter was calibrated. If a company using one of these flow meters takes the reading but fails to multiply it by the appropriate correction factor, it would appear their product uses a lot less compressed air – easily half of what it actually consumes. **EXAIR's Digital Flowmeter models (starting on page 10) are an easy to use solution that does not require regular calibration and provides the actual reading without having to use a correction factor.**

EXAIR_Cat36_25_FROMINDESIGN.indb 62 12/20/24 3:46 PM

High Force Air Nozzles

An INTELLIGENT COMPRESSED AIR® Product

Some applications require extremely high force with extensive reach. EXAIR offers most standard nozzles in a high force version. With incredibly high blowing forces these nozzles are ideal for part ejection as well as blowoff, cooling and drying applications. EXAIR has engineered Large Super Air Nozzles that put the blowing capability of multiple nozzles into one single air nozzle. Hard-hitting force is measured in pounds, not ounces. All meet OSHA noise level and dead end pressure requirements.

High Force Air Nozzles "Quick Pick" Comparison

High Force Air Nozzles Comparison (sorted by compressed air consumption)

Model	Material	Description	Inlet	Air Consumption at 80 PSIG (5.5 BAR)		Force		Sound Level dBA	More Details
				SCFM	SLPM	Lbs	Grams		
HP1126	Zinc Aluminum alloy	1" High Power Flat Super Air Nozzle	1/8 FNPT	17.5	495	1†	454	82	p. 63
HP1126SS	Stainless Steel - Type 316	1" High Power Flat Super Air Nozzle	1/8 FNPT	17.5	495	1†	454	82	p. 63
HP1002	Brass	High Power Safety Air Nozzle	1/4 FNPT	32	906	1.8*	816	87	p. 64
HP1002SS	Stainless Steel - Type 303	High Power Safety Air Nozzle	1/4 FNPT	32	906	1.8*	816	87	p. 64
1104	ZInc Aluminum alloy	Super Air Nozzle	3/8 FNPT	35	991	1.9*	862	82	p. 64
1104SS	Stainless Steel - Type 316	Super Air Nozzle	3/8 FNPT	35	991	1.9*	862	82	p. 64
1104-PEEK	PEEK (Plastic)	Super Air Nozzle	3/8 FNPT	35	991	1.9*	862	82	p. 64
1105	ZInc Aluminum alloy	Super Air Nozzle	3/8 MNPT	35	991	1.9*	862	82	p. 64
1105SS	Stainless Steel - Type 316	Super Air Nozzle	3/8 MNPT	35	991	1.9*	862	82	p. 64
HP1125	Zinc Aluminum alloy	2" High Power Flat Super Air Nozzle	1/4 FNPT	37	1,039	2.2†	998	83	p. 64
HP1125SS	Stainless Steel - Type 316	2" High Power Flat Super Air Nozzle	1/4 FNPT	37	1,039	2.2†	998	83	p. 64
1111-4	Zinc Aluminum alloy	Super Air Nozzle Cluster	3/8 FNPT	56	1,585	3.2*	1,451	82	p. 67
1008SS	Stainless Steel - Type 316	Back Blow Air Nozzle	1 FNPT	57	1,614	NA	NA	89	p. 59
1106	Zinc Aluminum alloy	Super Air Nozzle	1/2 FNPT	60	1,699	3.3*	1,497	87	p. 65
1106SS	Stainless Steel - Type 316	Super Air Nozzle	1/2 FNPT	60	1,699	3.3*	1,497	87	p. 65
1106-PEEK	PEEK (Plastic)	Super Air Nozzle	1/2 FNPT	60	1,699	3.3*	1,497	87	p. 65
1107	Zinc Aluminum alloy	Super Air Nozzle	1/2 MNPT	60	1,699	3.3*	1,497	87	p. 65
1107SS	Stainless Steel - Type 316	Super Air Nozzle	1/2 MNPT	60	1,699	3.3*	1,497	87	p. 65
1112	Zinc Aluminum alloy	Super Air Nozzle	3/4 FNPT	91	2,577	4.5*	2,041	96	p. 65
1112SS	Stainless Steel - Type 316	Super Air Nozzle	3/4 FNPT	91	2,577	4.5*	2,041	96	p. 65
1113	Zinc Aluminum alloy	Super Air Nozzle	3/4 MNPT	91	2,577	4.5*	2,041	96	p. 65
1113SS	Stainless Steel - Type 316	Super Air Nozzle	3/4 MNPT	91	2,577	4.5*	2,041	96	p. 65
1111-7	Zinc Aluminum alloy	Super Air Nozzle Cluster	1/2 FNPT	98	2,773	5.7*	2,585	85	p. 67
1114	Zinc Aluminum alloy	Super Air Nozzle	1 FNPT	135	3,823	6.6*	2,994	99	p. 65
1114SS	Stainless Steel - Type 316	Super Air Nozzle	1 FNPT	135	3,823	6.6*	2,994	99	p. 65
1115	Zinc Aluminum alloy	Super Air Nozzle	1 MNPT	135	3,823	6.6*	2,994	99	p. 65
1115SS	Stainless Steel - Type 316	Super Air Nozzle	1 MNPT	135	3,823	6.6*	2,994	99	p. 65
1111-12	Zinc Aluminum alloy	Super Air Nozzle Cluster	1 FNPT	168	4,754	9.8*	4,445	89	p. 67
1116	Zinc Aluminum alloy	Super Air Nozzle	1-1/4 FNPT	188	5,324	9.4*	4,264	102	p. 66
1117	Zinc Aluminum alloy	Super Air Nozzle	1-1/4 MNPT	188	5,324	9.4*	4,264	102	p. 66
1118	Zinc Aluminum alloy	Super Air Nozzle	1-1/4 FNPT	300	8,495	15*	6,804	106	p. 66
1119	Zinc Aluminum alloy	Super Air Nozzle	1-1/4 MNPT	300	8,495	15*	6,804	106	p. 66
1120	Zinc Aluminum alloy	Super Air Nozzle	1-1/4 FNPT	460	13,026	23*	10,433	109	p. 66
1121	Zinc Aluminum alloy	Super Air Nozzle	1-1/4 MNPT	460	13,026	23*	10,433	109	p. 66

For Air Nozzles with lower force, see page 54.

* Force measured at 12" (305mm) from target. All sound levels measured at 3 feet (914mm). All measurements taken at 80 PSIG (5.5 BAR).

† Force measured at 12" (305mm) from target with a .025" (0.64mm) shim installed.

FNPT = NPT Female
MNPT = NPT Male

1" High Power Flat Super Air Nozzles™



Model HP1126 1/8 NPT female
Material: Zinc Aluminum alloy
Model HP1126SS 1/8 NPT female
Material: Type 316 Stainless Steel



A 1" High Power Flat Super Air Nozzle is used to tip a part from a chute and on to a conveyor.

Model HP1126 and HP1126SS
1" High Power Flat Super Air Nozzles

EXAIR's 1" High Power Flat Super Air Nozzles produce a flat 1" (25mm) wide airstream with a blowing force of 1 pound. The unique design of this super-efficient nozzle makes it an ideal fit for both tight spaces and tight budgets. It uses EXAIR's patented technology to maximize entrained airflow while reducing noise levels.

Air Consumption		Force*		Sound Level
SCFM	SLPM	Lbs	Grams	dBA
17.5	495	1	454	82

* Force measured at 12" (305mm) from target.
Sound level measured at 3' (914mm).
All measurements taken at 80 PSIG (5.5 BAR).
.025" (0.64mm) shim installed.

Dimensions and Airflow Pattern

DOWNLOAD drawings at EXAIR.com

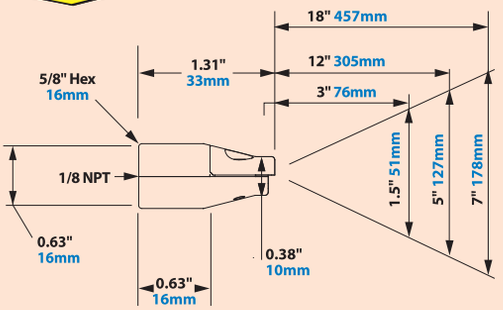

The Model HP1136SS Shim Set for the 1" High Power Flat Super Air Nozzle includes a .020" (0.51mm) and .030" (0.76mm) thick shim. A .025" (0.64mm) shim is installed.

EXAIR_Cat36_25_FROMINDESIGN.indb 63 12/20/24 3:46 PM

High Force Air Nozzles

An INTELLIGENT COMPRESSED AIR® Product

High Power Safety Air Nozzles™



Model HP1002 1/4 NPT female
Material: Brass

Model HP1002SS 1/4 NPT female
Material: Type 303 Stainless Steel

Model HP1002 and HP1002SS High Power Safety Air Nozzles

Provide strong blowing force for applications requiring high thrust and velocity. It uses more compressed air than other air nozzles but is low when compared to typical blow-offs delivering the same force.

Air Consumption		Force*		Sound Level
SCFM	SLPM	Lbs	Grams	dBA
32	906	1.8	816	87

* Force measured at 12" (305mm) from target.
Sound level measured at 3' (914mm).
All measurements taken at 80 PSIG (5.5 BAR).

Dimensions and Airflow Pattern

DOWNLOAD drawings at EXAIR.com

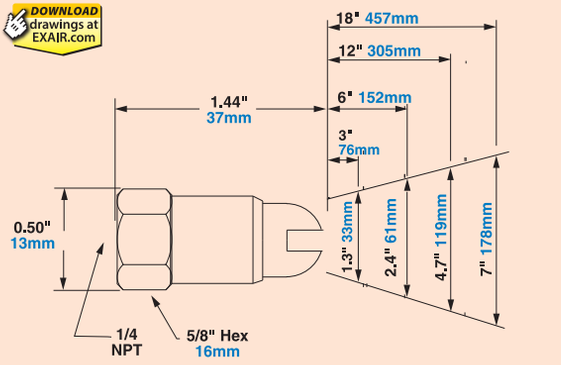

2" High Power Flat Super Air Nozzles™



Model HP1125 1/4 NPT female
Material: Zinc Aluminum alloy

Model HP1125SS 1/4 NPT female
Material: Type 316 Stainless Steel



Model HP1125 and HP1125SS 2" High Power Flat Super Air Nozzles

EXAIR's 2" High Power Flat Super Air Nozzles produce a flat 2" (51mm) wide air-stream with a strong blowing force of 2.2 pounds (998 grams). The adjustable force is more than three times that of ordinary air nozzles. It uses EXAIR's patented† technology to maximize entrained airflow while reducing noise levels.

Air Consumption		Force*		Sound Level
SCFM	SLPM	Lbs	Grams	dBA
37	1,039	2.2	998	83

* Force measured at 12" (305mm) from target.
Sound level measured at 3' (914mm).
All measurements taken at 80 PSIG (5.5 BAR).
.025" (0.64mm) shim installed.
† Patent #5402938

Dimensions and Airflow Pattern

DOWNLOAD drawings at EXAIR.com

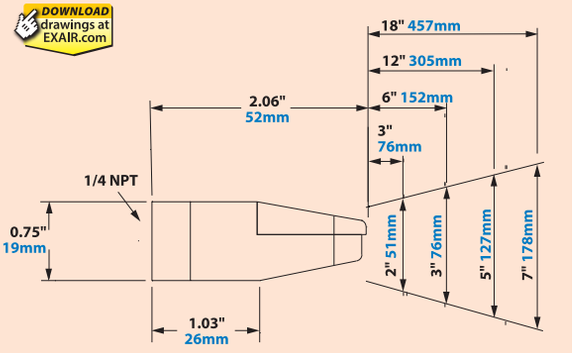

Note: For highest force and flow, order Model 900633 .030" (0.76mm) shim.

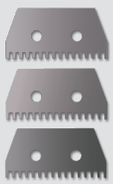

The Model HP1132SS Shim Set for the 2" High Power Flat Super Air Nozzle includes a .020" (0.51mm) and .030" (0.76mm) thick shim. A .025" (0.64mm) shim is installed.

Large Super Air Nozzles™



Model 1104 3/8 NPT female
Material: Zinc Aluminum alloy

Model 1104SS 3/8 NPT female
Material: Type 316 Stainless Steel

Model 1104-PEEK 3/8 NPT female
Material: PEEK (plastic)



Model 1105 3/8 NPT male
Material: Zinc Aluminum alloy

Model 1105SS 3/8 NPT male
Material: Type 316 Stainless Steel

Model 1104, 1104SS, 1104-PEEK, 1105 and 1105SS 3/8 NPT Super Air Nozzles

EXAIR's 3/8 NPT Super Air Nozzles produce 1.9 lbs (862 grams) of strong blowing force that is 2.3 times that of the standard Super Air Nozzle. The protective aerodynamic slots guide the airflow to a single point of convergence for hard-hitting force and dramatic noise reduction over typical blowoffs.

Air Consumption		Force*		Sound Level
SCFM	SLPM	Lbs	Grams	dBA
35	991	1.9	862	82

* Force measured at 12" (305mm) from target.
Sound level measured at 3' (914mm).
All measurements taken at 80 PSIG (5.5 BAR).

Plant Engineering PRODUCT of the YEAR Finalist 2014

Dimensions and Airflow Pattern

DOWNLOAD drawings at EXAIR.com

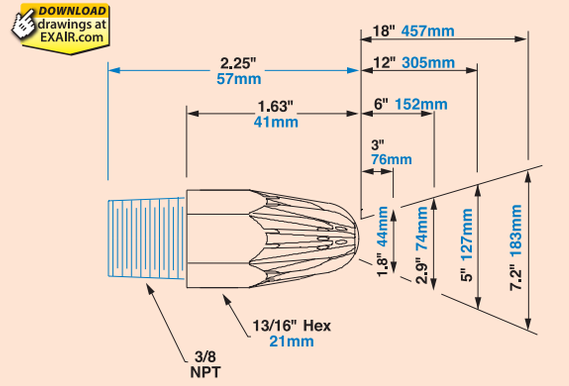

EXAIR
For Technical Assistance, Call an EXAIR Application Engineer 1-800-903-9247
Toll Free FAX (866) 329-3924 • E-mail: techelp@exair.com • www.exair.com
EXAIR BLOG

EXAIR_Cat36_25_FROMINDESIGN.indb 64 12/20/24 3:46 PM

An INTELLIGENT COMPRESSED AIR® Product

Large Super Air Nozzles™



Model 1106 1/2 NPT female
Material: Zinc Aluminum alloy
Model 1106SS 1/2 NPT female
Material: Type 316 Stainless Steel
Model 1106-PEEK 1/2 NPT female
Material: PEEK (Plastic)



Model 1107 1/2 NPT male
Material: Zinc Aluminum alloy
Model 1107SS 1/2 NPT male
Material: Type 316 Stainless Steel

Model 1106, 1106-PEEK, 1106SS, 1107 and 1107SS 1/2 NPT Super Air Nozzles

EXAIR's 1/2 NPT Super Air Nozzles produce 3.3 lbs (1.5 kg) of blowing force – 4 times that of ordinary nozzles. Air consumption and noise are extremely low compared to that of open pipe or copper tubes.

Air Consumption		Force*		Sound Level
SCFM	SLPM	Lbs	Kg	dBA
60	1,699	3.3	1.5	87

* Force measured at 12" (305mm) from target.
Sound level measured at 3' (914mm).
All measurements taken at 80 PSIG (5.5 BAR).

Plant Engineering PRODUCT of the YEAR Finalist 2005

2024 WINNER OHS INDUSTRIAL HYGIENE AWARDS

Dimensions and Airflow Pattern

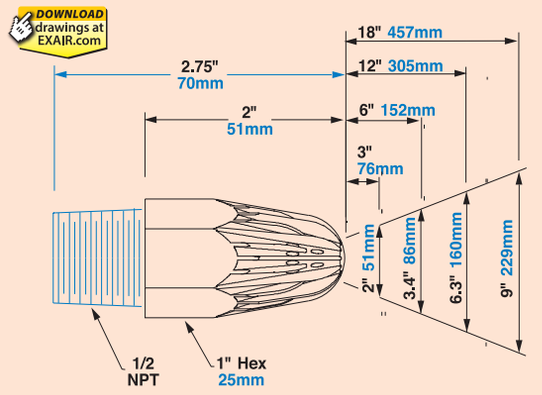



Model 1112 3/4 NPT female
Material: Zinc Aluminum alloy
Model 1112SS 3/4 NPT female
Material: Type 316 Stainless Steel



Model 1113 3/4 NPT male
Material: Zinc Aluminum alloy
Model 1113SS 3/4 NPT male
Material: Type 316 Stainless Steel

Model 1112, 1112SS, 1113 and 1113SS 3/4 NPT Super Air Nozzles

EXAIR's Super Air Nozzles are available in larger sizes where extreme force is required. The 3/4 NPT Super Air Nozzles produce 4.5 lbs (2.04 kg) of blowing force – over 5 times that of ordinary nozzles.

Air Consumption		Force*		Sound Level
SCFM	SLPM	Lbs	Kg	dBA
91	2,577	4.5	2.04	96

* Force measured at 12" (305mm) from target.
Sound level measured at 3' (914mm).
All measurements taken at 80 PSIG (5.5 BAR).
OSHA allows 3 hours of exposure per day without hearing protection.

Dimensions and Airflow Pattern

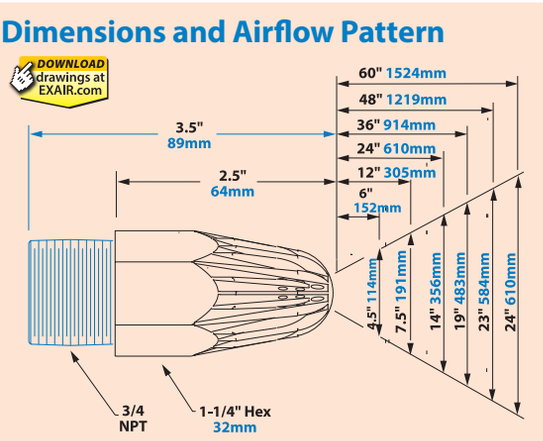



Model 1114 1 NPT female
Material: Zinc Aluminum alloy
Model 1114SS 1 NPT female
Material: Type 316 Stainless Steel



Model 1115 1 NPT male
Material: Zinc Aluminum alloy
Model 1115SS 1 NPT male
Material: Type 316 Stainless Steel

Model 1114, 1114SS, 1115 and 1115SS 1 NPT Super Air Nozzles

EXAIR's 1 NPT Super Air Nozzles optimize entrained airflow across the nozzle surface to minimize the noise level while providing extremely strong blowing force. They produce 6.6 lbs (3.01 kg) of blowing force – over 8 times that of ordinary nozzles.

Air Consumption		Force*		Sound Level
SCFM	SLPM	Lbs	Kg	dBA
135	3,823	6.6	2.99	99

* Force measured at 12" (305mm) from target.
Sound level measured at 3' (914mm).
All measurements taken at 80 PSIG (5.5 BAR)
OSHA allows 2 hours of exposure per day without hearing protection.

2012 Plant Engineering PRODUCT of the YEAR Bronze Award

Dimensions and Airflow Pattern

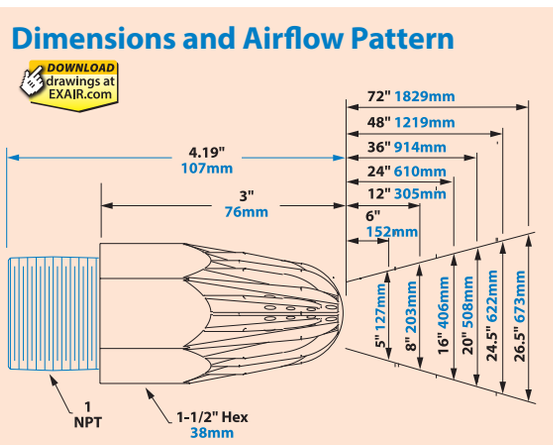

EXAIR_Cat36_25_FROMINDESIGN.indb 65 12/20/24 3:46 PM

High Force Air Nozzles

Large Super Air Nozzles™



Model 1116 1-1/4 NPT female
Material: Zinc Aluminum alloy



Model 1117 1-1/4 NPT male
Material: Zinc Aluminum alloy

Model 1116 and 1117
1-1/4 NPT Super Air Nozzles

EXAIR's 1-1/4 NPT Super Air Nozzles provide exceptionally strong blowing force. They produce 9.4 lbs (4.25 kg) of blowing force – almost 12 times that of the standard Super Air Nozzle.

Air Consumption		Force*		Sound Level
SCFM	SLPM	Lbs	Kg	dBA
188	5,324	9.4	4.26	102

* Force measured at 12" (305mm) from target.
Sound level measured at 3' (914mm).
All measurements taken at 80 PSIG (5.5 BAR).
OSHA allows 1 hour of exposure per day without hearing protection.

2008 Plant Engineering PRODUCT of the YEAR WINNER

Dimensions and Airflow Pattern

DOWNLOAD drawings at EXAIR.com

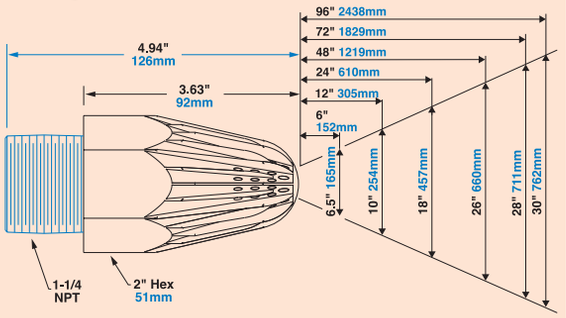



Model 1118 1-1/4 NPT female
Material: Zinc Aluminum alloy



Model 1119 1-1/4 NPT male
Material: Zinc Aluminum alloy

Model 1118 and 1119
1-1/4 NPT Super Air Nozzles

These 1-1/4 NPT Super Air Nozzles have larger orifices than the Model 1116 / 1117 that provide additional air velocity. They generate 15 lbs (6.80 kg) of blowing force – almost 18 times that of the standard Super Air Nozzle.

Air Consumption		Force*		Sound Level
SCFM	SLPM	Lbs	Kg	dBA
300	8,495	15	6.80	106

* Force measured at 12" (305mm) from target.
Sound level measured at 3' (914mm).
All measurements taken at 80 PSIG (5.5 BAR).
OSHA allows 1/2 hour of exposure per day without hearing protection.

Dimensions and Airflow Pattern

DOWNLOAD drawings at EXAIR.com

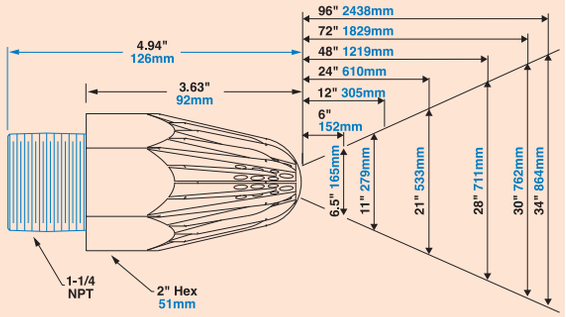



Model 1120 1-1/4 NPT female
Material: Zinc Aluminum alloy

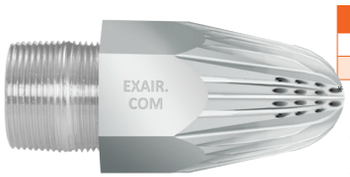

Model 1121 1-1/4 NPT male
Material: Zinc Aluminum alloy

Model 1120 and 1121
1-1/4 NPT Super Air Nozzles

These 1-1/4 NPT Super Air Nozzles have the largest orifices that provide additional air velocity, and generate the strongest blowing force of any single air nozzle. They produce 23 lbs (10.43 kg) of blowing force – almost 28 times that of the standard Super Air Nozzle.

Air Consumption		Force*		Sound Level
SCFM	SLPM	Lbs	Kg	dBA
460	13,026	23	10.43	109

* Force measured at 12" (305mm) from target.
Sound level measured at 3' (914mm).
All measurements taken at 80 PSIG (5.5 BAR).
OSHA allows 1/2 hour of exposure per day without hearing protection.

Dimensions and Airflow Pattern

DOWNLOAD drawings at EXAIR.com

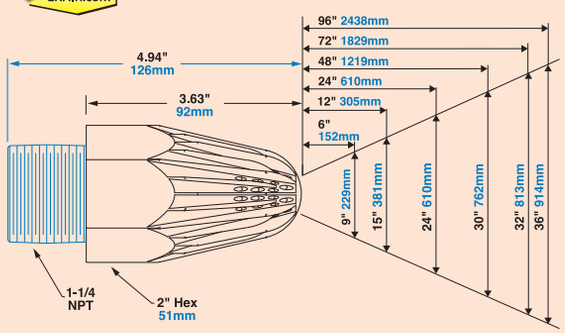

EXAIR_Cat36_25_FROMINDESIGN.indb 66 12/20/24 3:46 PM

An INTELLIGENT COMPRESSED AIR® Product

Super Air Nozzle Clusters

Model 1111-4 Super Air Nozzle Cluster



Air Consumption		Force*		Sound Level
SCFM	SLPM	Lbs	Kg	dBA
56	1,585	3.2	1.45	82

* Force measured at 12" (305mm) from target.
Sound level measured at 3' (914mm).
All measurements taken at 80 PSIG (5.5 BAR).

Model 1111-4 3/8 NPT female
Material: Nozzles - Zinc Aluminum alloy
Body - Aluminum

Dimensions and Airflow Pattern

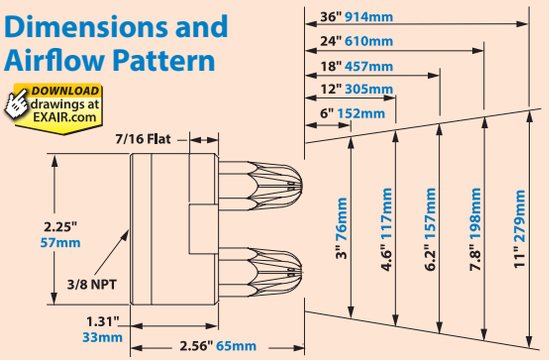

Model 1111-7 Super Air Nozzle Cluster



Air Consumption		Force*		Sound Level
SCFM	SLPM	Lbs	Kg	dBA
98	2,773	5.7	2.59	85

* Force measured at 12" (305mm) from target.
Sound level measured at 3' (914mm).
All measurements taken at 80 PSIG (5.5 BAR).

Model 1111-7 1/2 NPT female
Material: Nozzles - Zinc Aluminum alloy
Body - Aluminum

Dimensions and Airflow Pattern

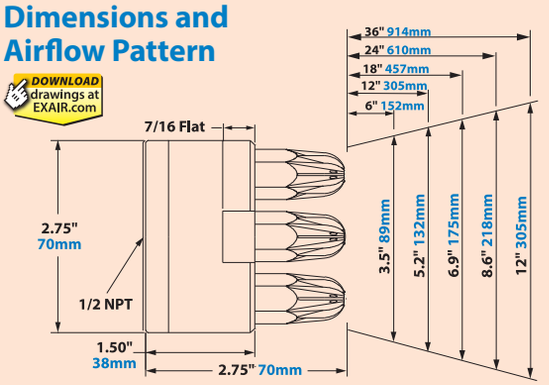

Model 1111-12 Super Air Nozzle Cluster



Air Consumption		Force*		Sound Level
SCFM	SLPM	Lbs	Kg	dBA
168	4,754	9.8	4.45	89

* Force measured at 12" (305mm) from target.
Sound level measured at 3' (914mm).
All measurements taken at 80 PSIG (5.5 BAR).

Model 1111-12 1 NPT female
Material: Nozzles - Zinc Aluminum alloy
Body - Aluminum

Dimensions and Airflow Pattern

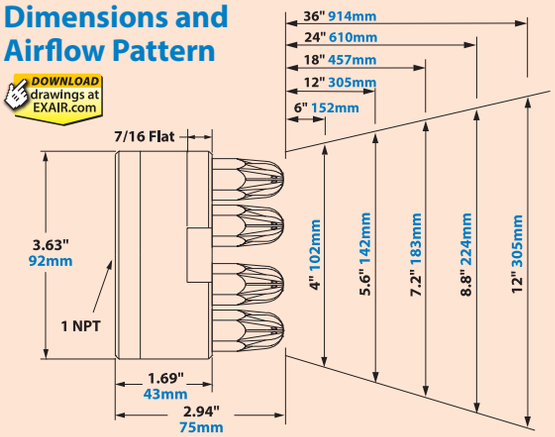

Flexible Stay Set Hoses™

Adding Flexibility

For applications where frequent repositioning of the standard force Air Nozzles or Jets is required, the Flexible Stay Set Hoses™ are ideal. Simply mount the hose in close proximity to the application and bend it to aim the airstream at the target. Since the hose has "memory", it will not creep or bend. It always keeps the aim until physically moved to the next position.

Two versions of the Stay Set Hoses are available in a variety of lengths. The 1/4 MNPT × 1/4 MNPT hose has a 1/4 NPT male fitting on each end and the 1/4 MNPT × 1/8 FNPT hose has a 1/4 NPT male fitting on one end and 1/8 NPT female fitting on the other.



Flexible Stay Set Hoses bend and keep their aim until physically moved.

EXAIR_Cat36_25_FROMINDESIGN.indb 67 12/20/24 3:46 PM

Nozzle Accessories

Flexible Stay Set Hoses™ continued

The Air Nozzles shown below can be used with the following Stay Set Hoses (1/4 NPT male fitting on each end):

Model #	Description	Model #	Description
9206	6" (152mm) 1/4 MNPT x 1/4 MNPT	9224	24" (610mm) 1/4 MNPT x 1/4 MNPT
9212	12" (305mm) 1/4 MNPT x 1/4 MNPT	9230	30" (762mm) 1/4 MNPT x 1/4 MNPT
9218	18" (457mm) 1/4 MNPT x 1/4 MNPT	9236	36" (914mm) 1/4 MNPT x 1/4 MNPT



Model 1002
Safety Air Nozzle

Model 1002SS
SS Safety Air Nozzle

Model HP1002
High Power Safety Air Nozzle

Model HP1002SS
SS High Power Safety Air Nozzle



Model 1122
2" (51mm) Flat Super Air Nozzle

Model 1122SS
2" (51mm) SS Flat Super Air Nozzle

Model HP1125
2" (51mm) High Power Flat Super Air Nozzle

Model HP1125SS
2" (51mm) SS High Power Flat Super Air Nozzle





Model 1100
Super Air Nozzle

Model 1100SS
SS Super Air Nozzle

Model 1100-PEEK
PEEK Super Air Nozzle

Model 1006SS
SS Back Blow Air Nozzle

The Air Nozzles and Jets shown below can be used with the following Stay Set Hoses (1/4 NPT male fitting on one end, 1/8 NPT female on the other):

Model #	Description	Model #	Description
9256	6" (152mm) 1/4 MNPT x 1/8 FNPT	9274	24" (610mm) 1/4 MNPT x 1/8 FNPT
9262	12" (305mm) 1/4 MNPT x 1/8 FNPT	9280	30" (762mm) 1/4 MNPT x 1/8 FNPT
9268	18" (457mm) 1/4 MNPT x 1/8 FNPT	9286	36" (914mm) 1/4 MNPT x 1/8 FNPT



Model 1108SS-NPT
Atto Super Air Nozzle

Model 1108-PEEK-NPT
Atto PEEK Super Air Nozzle

Model 1109SS-NPT
Pico Super Air Nozzle

Model 1109-PEEK-NPT
Pico PEEK Super Air Nozzle

Model 1110SS-NPT
Nano Super Air Nozzle

Model 1110-PEEK-NPT
Nano PEEK Super Air Nozzle



Model 1010SS
SS Micro Air Nozzle



Model 1126 1" (25mm)
Flat Super Air Nozzle

Model 1126SS 1" (25mm)
SS Flat Super Air Nozzle

Model HP1126 1" (25mm)
High Power Flat Super Air Nozzle

Model HP1126SS 1" (25mm)
SS High Power Flat Super Air Nozzle



Model 1103
Mini Super Air Nozzle

Model 1103SS
SS Mini Super Air Nozzle



Model 1009
Adjustable Air Nozzle

Model 1009SS
SS Adjustable Air Nozzle



Model 6013
High Velocity Air Jet

Model 6013SS
SS High Velocity Air Jet



Model 6019
Adjustable Air Jet

Model 6019SS
SS Adjustable Air Jet

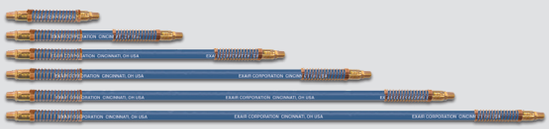

Flexible Stay Set Hoses bend to fit your application and will maintain their orientation until the position needs to be re-adjusted. The airstream can be aimed at precisely the correct spot.

Swivel Fittings

Swivel Fittings can be added to most EXAIR Nozzles by adding a "W" to the Model#.



Example:
1122 (2" Flat Super Air Nozzle)
+ W (Swivel Fitting)
1122W

EXAIR's Swivel Fittings make it easy to adjust the aim of the Air Nozzles and Jets. Correct placement of the blowing angle can help optimize performance, reduce noise levels and improve efficiency. Swivel Fittings permit a movement of 25 degrees from the center axis for a total movement of 50 degrees. Type 303 or 316 Stainless Steel.

Swivel Fittings

Model #	Description
9201	M4 x 0.5mm female x 1/8 MNPT, 316SS
9202	M5 x 0.5mm female x 1/8 MNPT, 316SS
9203	M6 x 0.75mm female x 1/8 MNPT, 316SS
9052	1/8 MNPT x 1/8 FNPT, 303SS
9053	1/4 MNPT x 1/4 FNPT, 303SS
9068	3/8 MNPT x 3/8 FNPT, 303SS
9069	1/2 MNPT x 1/2 FNPT, 303SS
9023	3/4 MNPT x 3/4 FNPT, 303SS
9204	1 MNPT x 1 FNPT, 303SS

Magnetic Bases

Magnetic bases are suited to applications where frequent movement of the Air Nozzle or Jet is required. The powerful magnet permits horizontal or vertical mounting that will hold the blowing position of the Stay Set Hose. A shutoff valve is provided that can be used to vary the force and flow.



Model #	Description
9042	One Outlet Magnetic Base
9043	Two Outlet Magnetic Base

For Technical Assistance, Call an EXAIR Application Engineer 1-800-903-9247
Toll Free FAX (866) 329-3924 • E-mail: techelp@exair.com • www.exair.com

An INTELLIGENT COMPRESSED AIR® Product

Build Your Own System

Now you can put together the best combination that suits your blowoff, cooling, drying or cleaning application. Select the model number that includes your choice of Air Nozzle or Jet, a length of Stay Set Hose, and a one or two outlet magnetic base. Here's how:

1. Choose the Air Nozzle or Jet model. **Example:** Model 1122 Super Air Nozzle
2. You have the option to include a length of Stay Set Hose. Simply list the model of the Stay Set Hose (shown on previous page) as a dash number after the Air Nozzle or Jet model number.
   Example: A Model 1122 Super Air Nozzle with a Model 9212 12" (305mm) Stay Set Hose is a Model 1122-**9212.**
3. You have the option to include a magnetic base. If you want a One Outlet Magnetic Base, change the second digit of the "added on" dash number to a **"3"**. If you would like the Two Outlet Magnetic Base, change the second digit to a **"4"**. By using a **"4"**, you will receive (2) Air Nozzles or Jets and (2) Stay Set Hoses to attach to the Two Outlet Magnetic Base.
   Example: Two Model 1122 Super Air Nozzles with two 12" (305mm) Stay Set Hoses and Two Outlet Magnetic Base is a Model 1122-9**4**12.



A Model 1122-9412 includes two Model 1122 Super Air Nozzles with two 12" (305mm) Stay Set Hose and Two Outlet Magnetic Base.

Blowoff Kits



Model # 1100-9312

Blowoff Kit includes:

(1) 1100 Super Air Nozzle
(1) 9212 12" (305mm) Stay Set Hose
(1) 9042 Magnetic Base



Model # 1100-9412

Blowoff Kit includes:

(2) 1100 Super Air Nozzles
(2) 9212 12" (305mm) Stay Set Hose
(1) 9043 Magnetic Base



Model # 1103-9362

Blowoff Kit includes:

(1) 1103 Mini Super Air Nozzle
(1) 9262 12" (305mm) Stay Set Hose
(1) 9042 Magnetic Base



Model # 1103-9462

Blowoff Kit includes

(2) 1103 Mini Super Air Nozzles
(2) 9262 12" (305mm) Stay Set Hose
(1) 9043 Magnetic Base



Model # 1122-9312

Blowoff Kit includes

(1) 1122 2" Flat Super Air Nozzle
(1) 9212 12" (305mm) Stay Set Hose
(1) 9042 Magnetic Base



Model # 1122-9412

Blowoff Kit includes

(2) 1122 2" Flat Super Air Nozzles
(2) 9212 12" (305mm) Stay Set Hose
(1) 9043 Magnetic Base



Model # 1909

Blowoff Kit includes

(1) 1102 Mini Super Air Nozzle
(1) 1009 Adjustable Air Nozzle
(1) 1100 1/4 NPT Super Air Nozzle
(1) 1104 3/8 NPT Super Air Nozzle
(1) 1106 1/2 NPT Super Air Nozzle
(1) 1122 2" Flat Super Air Nozzle
(1) 6013 High Velocity Air Jet
(1) 6019 Adjustable Air Jet



Model # 1909SS

Stainless Steel Blowoff Kit includes

(1) 1102SS 1/8 NPT Mini Super Air Nozzle
(1) 1009SS Adjustable Air Nozzle
(1) 1100SS 1/4 NPT Super Air Nozzle
(1) 1104SS 3/8 NPT Super Air Nozzle
(1) 1106SS 1/2 NPT Super Air Nozzle
(1) 1010SS 1/8 NPT Micro Air Nozzle
(1) 1122SS 2" Flat Super Air Nozzle



EXAIR nozzles wih flexible stayset hoses blow dry air onto a manufacturing part.

EXAIR_Cat36_25_FROMINDESIGN.indb 69 12/20/24 3:46 PM

Air Atomizing Spray Nozzles



All stainless steel construction for durability and corrosion resistance!

What Are Atomizing Nozzles?

EXAIR's Atomizing Spray Nozzles atomize fluids (most commonly water) in a range of spray patterns for a variety of uses. They combine liquid and compressed air to create a mist of atomized liquid that can be easily adjusted to meet the needs of your application. All models use stainless steel construction for durability and corrosion resistance. Atomizing spray nozzles are available in 1/8 NPT, 1/4 NPT and 1/2 NPT sizes.

EXAIR's atomizing nozzles are available in 3 basic families:

Built to Last 5 yr. WARRANTY See our Terms & Conditions



Internal Mix:

Internal mix nozzles mix the liquid and air inside the air cap and produce the finest atomization. Internal mix nozzles can be used on liquids with a viscosity up to 300 cP. Both air and liquid sides are pressure fed.

External Mix:

External mix nozzles have the highest flow rates and allow the air and liquid flows to be adjusted independently. These nozzles are best where precise liquid flow is needed. External mix nozzles can be used on liquids with a viscosity above 300 cP. Both air and liquid sides are pressure fed.

Siphon Fed:

Siphon fed nozzles require no liquid pressure and can be used with gravity fed liquids, or liquids from a siphon height as much as 36 inches (91cm). Siphon fed nozzles can be used on liquids with a viscosity up to 200 cP.



A Model SR1010SS is used to supply a cooling mist for a drilling operation.

Why Atomizing Nozzles?

With EXAIR's atomizing nozzles, you can coat, cool, treat and paint a variety of products. Used with water, they are an efficient way to cool hot items in your automated process. These nozzles are also an excellent choice for dust mitigation.

Sound levels for the individual Atomizing Spray Nozzles are not provided. The fluid, pressure, surfaces being treated and surrounding enclosures used in conjunction with the Atomizing Spray Nozzle to form the system will determine the actual sound levels (which can vary greatly). Max temperature is 400°F (204°C) for Atomizing Spray Nozzles. All atomizing nozzles are CE compliant.



(2) Model EB1030SS atomizing nozzles are used to give a final sanitary rinse prior to labeling wine bottles.

Applications

- Washing
- Rinsing
- Coating
- Cooling
- Quenching
- Wetting (moistening)
- Humidification
- Dust Control

Advantages

- Fully adjustable
- Maximizes liquid dispersion
- Minimizes liquid consumption
- All stainless steel construction
- Compact
- Versatile
- Interchangeable liquid and air caps
- Minimizes air consumption
- Fine atomization

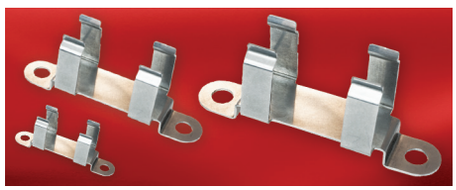

Mounting Brackets are available - Model 901786 for 1/8 NPT, Model 901318 for 1/4 NPT and Model 901556 for 1/2 NPT atomizing nozzles.

An INTELLIGENT COMPRESSED AIR® Product

Internal Mix Narrow Angle Round Pattern - 1/8 NPT



Model: AN8010SS
Material: Type 303 Stainless Steel

Model: AN8020SS
Material: Type 303 Stainless Steel

Model: AN8030SS
Material: Type 303 Stainless Steel

Model: AN8040SS
Material: Type 303 Stainless Steel

Model: AN8050SS
Material: Type 303 Stainless Steel

Model AN8010SS, AN8020SS, AN8030SS, AN8040SS and AN8050SS

1/8 NPT internal mix narrow angle round pattern nozzles are excellent for spraying a concentrated mist of liquid. Because of the versatility of their adjustments, they can apply a heavy coat up close or send a very fine mist over 16 feet away! They are often used for precision application of lubricants during assembly, or marking items as they move through an assembly line. Narrow angle round pattern atomizing nozzles are capable of delivering the most liquid of any of our 1/8 NPT internal mix atomizing nozzles.

For pressure fed applications not requiring independent air and liquid control.

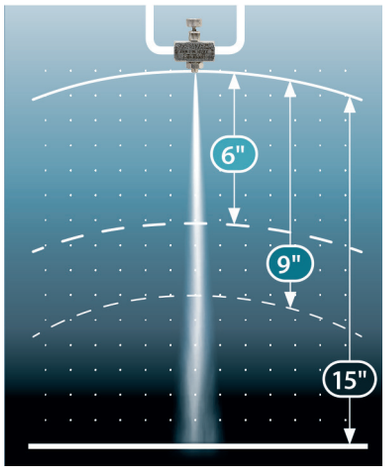

The modifiable spray pattern can generate a heavy or precision engineered mist for distances over 16 feet!

Dimensions and Airflow Pattern

DOWNLOAD drawings at EXAIR.com

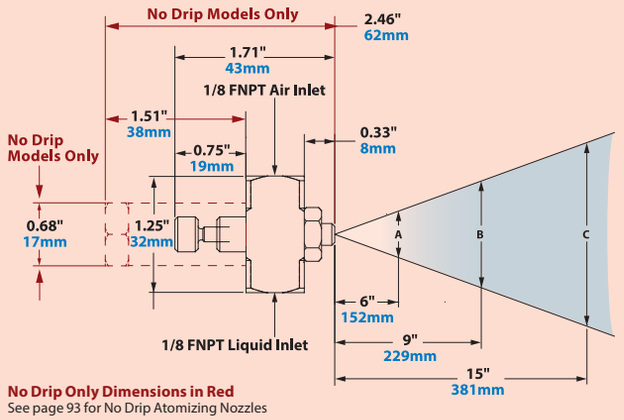

No Drip Only Dimensions in Red
See page 93 for No Drip Atomizing Nozzles

Model	10 PSI/0.7 BAR Liquid						20 PSI/1.4 BAR Liquid						30 PSI/2.1 BAR Liquid						40 PSI/2.8 BAR Liquid						60 PSI/4.1 BAR Liquid						Spray Dimensions												Model
	Air Pressure PSI/BAR		GPH/LPH		SCFM/ SLPM		Air Pressure PSI/BAR		GPH/LPH		SCFM/ SLPM		Air Pressure PSI/BAR		GPH/ LPH		SCFM/ SLPM		Air Pressure PSI/BAR		GPH/ LPH		SCFM/ SLPM		Air Pressure PSI/BAR		GPH/LPH		SCFM/ SLPM		Pressure				Width						Max. Depth feet/m		
																															Air PSI/ BAR		Liquid PSI/ BAR		A		B		C			
																																			in	cm	in	cm	in	cm		
AN8010SS	10	0.7	0.97	3.7	0.25	7.1	14	1.0	1.83	6.9	0.32	9.1	24	1.7	1.97	7.5	0.52	14.7	32	2.2	2.23	8.4	0.67	19.0	50	3.4	2.63	10.0	0.98	27.7	10	0.7	10	0.7	3	8	3.5	9	4.5	11	3.5	1.1	AN8010SS
	12	0.8	0.80	3.0	0.32	9.1	18	1.2	1.5	5.7	0.39	11.0	28	1.9	1.7	6.4	0.59	16.7	36	2.5	1.97	7.5	0.74	20.9	54	3.7	2.37	9.0	1.02	28.9	18	1.2	20	1.4	3	8	4	10	5	13	5	1.5	
	14	1.0	0.60	2.3	0.4	11.3	22	1.5	1.27	4.8	0.52	14.7	32	2.2	1.37	5.2	0.71	20.1	40	2.8	1.67	6.3	0.84	23.8	58	4.0	2.1	7.9	1.12	31.7	32	2.2	30	2.1	3	8	4	10	5.5	14	7	2.1	
	—	—	—	—	—	—	26	1.8	0.73	2.8	0.67	19.0	38	2.6	0.8	3.0	0.93	26.3	48	3.3	1.00	3.8	1.09	30.9	66	4.6	1.7	6.4	1.21	34.3	48	3.3	40	2.8	3	8	4.5	11	6	15	8	2.4	
AN8020SS	10	0.7	1.33	5.0	0.43	12.2	18	1.2	1.83	6.9	0.71	20.1	24	1.7	2.27	8.6	0.91	25.8	30	2.1	2.63	10.0	1.05	29.7	40	2.8	3.33	12.6	1.31	37.1	10	0.7	10	0.7	2	5	3	8	4	10	5	1.5	AN8020SS
	12	0.8	1.17	4.4	0.5	14.2	20	1.4	1.73	6.5	0.75	21.2	28	1.9	2.07	7.8	0.99	28.0	34	2.3	2.47	9.3	1.12	31.7	46	3.2	3.13	11.8	1.4	39.6	20	1.4	20	1.4	2.5	6	3.5	9	4.5	11	7	2.1	
	14	1.0	1.03	3.9	0.6	17.0	22	1.5	1.63	6.2	0.84	23.8	32	2.2	1.9	7.2	1.09	30.9	38	2.6	2.33	8.8	1.20	34.0	52	3.6	2.87	10.9	1.6	45.3	32	2.2	30	2.1	2.5	6	3.5	9	4.5	11	7	2.1	
	—	—	—	—	—	—	—	—	—	—	—	—	40	2.8	1.57	5.9	1.45	41.0	48	3.3	1.87	7.1	1.53	43.3	70	4.8	2.2	8.3	2.2	62.3	70	4.8	60	4.1	3.5	9	4.5	11	6.5	17	10	3.0	
AN8030SS	12	0.8	2.20	8.3	0.47	13.3	22	1.5	2.9	11.0	0.75	21.2	30	2.1	3.7	14.0	0.96	27.2	36	2.5	4.47	16.9	1.09	30.9	48	3.3	6.3	23.8	1.28	36.2	12	0.8	10	0.7	2	5	3	8	4.5	11	6	1.8	AN8030SS
	16	1.1	1.60	6.1	0.56	15.9	26	1.8	2.43	9.2	0.82	23.2	34	2.3	3.2	12.1	1.00	28.3	40	2.8	4.17	15.8	1.12	31.7	52	3.6	5.87	22.2	1.3	36.8	26	1.8	20	1.4	2.5	6	3.5	9	5	13	6	1.8	
	24	1.7	0.67	2.5	0.95	26.9	38	2.6	1.13	4.3	1.35	38.2	46	3.2	1.8	6.8	1.45	41.0	52	3.6	2.67	10.1	1.49	42.2	64	4.4	4.56	17.3	1.59	45.0	52	3.6	40	2.8	3	8	4	10	6	15	11	3.4	
	28	1.9	0.47	1.8	1.07	30.3	42	2.9	0.77	2.9	1.53	43.3	52	3.6	1.4	5.3	1.76	49.8	60	4.1	2.00	7.6	1.87	52.9	70	4.8	3.8	14.4	1.84	52.1	70	4.8	60	4.1	4	10	5	13	6.5	17	11	3.4	
AN8040SS	16	1.1	4.87	9.6	2.54	71.9	28	1.9	6.60	25.0	3.64	103.0	40	2.8	7.83	29.7	4.70	132.9	48	3.3	9.33	35.3	5.40	153	65	4.5	12.0	45.4	6.70	190	16	1.1	10	0.7	2.5	6	3	8	4	10	10	3.0	AN8040SS
	20	1.4	3.57	11.0	2.92	82.6	32	2.2	5.60	21.2	3.98	112.6	44	3.0	6.87	26.0	4.99	141.3	55	3.8	8.17	30.9	5.98	169	75	5.2	10.8	41.0	7.57	214	32	2.2	20	1.4	3	8	4	10	5.5	14	11	3.4	
	26	1.8	1.87	13.6	3.60	101.8	44	3.0	2.43	9.2	5.16	146.1	60	4.1	2.80	10.6	6.43	182.0	80	5.5	2.53	9.6	8.58	243	90	6.2	8.17	30.9	9.03	256	80	5.5	40	2.8	3	8	4	10	5.5	14	13	4.0	
	30	2.1	1.03	15.4	4.06	115.0	50	3.4	1.33	5.0	5.92	167.7	70	4.8	1.23	4.7	7.78	220.4	90	6.2	1.27	4.8	9.61	272	100	6.9	6.13	23.2	9.90	280	100	6.9	60	4.1	3.5	9	4.5	11	6	15	15	4.6	
AN8050SS	12	0.8	7.60	28.8	1.76	49.8	20	1.4	11.63	44.0	2.37	67.1	30	2.1	13.5	51.1	3.42	96.8	38	2.6	15.4	58.2	3.99	113	54	3.7	18.9	71.7	5.17	146	12	0.8	10	0.7	3	8	4	10	6	15	9	2.7	AN8050SS
	14	1.0	6.10	23.1	1.97	55.8	22	1.5	10.53	39.9	2.85	80.7	34	2.3	11.37	43.0	3.92	111.0	42	2.9	14.1	53.3	4.50	127	60	4.1	17.2	65.1	5.83	165	22	1.5	20	1.4	3	8	4	10	6	15	11	3.4	
	16	1.1	4.80	18.2	2.18	61.7	24	1.7	9.43	35.7	3.11	88.0	38	2.6	9.07	34.3	4.4	124.6	46	3.2	12.3	46.7	4.95	140	65	4.5	15.7	59.4	6.45	183	38	2.6	30	2.1	3	8	4.5	11	6	15	14	4.3	
	—	—	—	—	—	—	32	2.2	5.07	19.2	4.19	118.6	46	3.2	5.6	21.2	5.52	156.3	56	3.9	7.7	29.0	6.24	177	85	5.9	8.13	30.8	8.58	243	85	5.9	60	4.1	4	10	5	13	6.5	17	16	4.9	

EXAIR_Cat36_25_FROMINDESIGN.indb 71 12/20/24 3:46 PM

Air Atomizing Spray Nozzles

Internal Mix Wide Angle Round Pattern - 1/8 NPT



Model: AW8010SS
Material: Type 303 Stainless Steel

Model: AW8020SS
Material: Type 303 Stainless Steel

Model: AW8030SS
Material: Type 303 Stainless Steel

Model: AW8040SS
Material: Type 303 Stainless Steel

Model AW8010SS, AW8020SS, AW8030SS and AW8040SS

EXAIR's 1/8 NPT internal mix wide angle round pattern atomizing nozzles are great for covering a broad area. They can be adjusted for a light mist or a heavy soaking spray. They are popular for dust mitigation, humidification, and cooling of products, people or livestock in a broad area. These nozzles are also perfect for applying a coating to parts packed in large containers, for example, misting a container of stamped steel parts with oil to prevent oxidation prior to shipment.

For pressure fed applications not requiring independent air and liquid control.

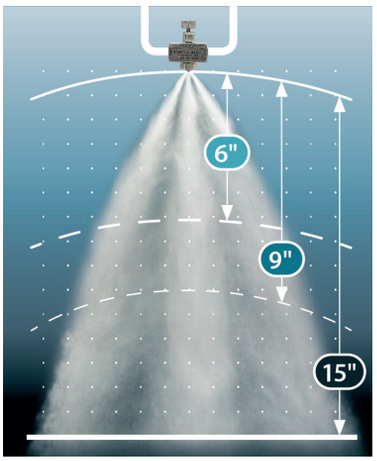

1/8 NPT Internal Mix Wide Angle Round Pattern atomizing nozzles are perfect for covering broad areas. They are ideal for dust migration, humidification and a variety of cooling applications.

Dimensions and Airflow Pattern

DOWNLOAD drawings at EXAIR.com

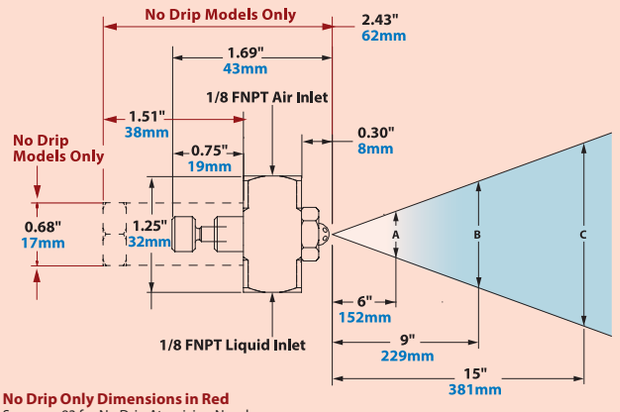

No Drip Only Dimensions in Red
See page 93 for No Drip Atomizing Nozzles

Model	10 PSI/0.7 BAR Liquid						20 PSI/1.4 BAR Liquid						30 PSI/2.1 BAR Liquid						40 PSI/2.8 BAR Liquid						60 PSI/4.1 BAR Liquid						Spray Dimensions													
	Air Pressure PSI/BAR		GPH/ LPH		SCFM/ SLPM		Air Pressure PSI/BAR		GPH/ LPH		SCFM/ SLPM		Air Pressure PSI/BAR		GPH/ LPH		SCFM/ SLPM		Air Pressure PSI/BAR		GPH/ LPH		SCFM/ SLPM		Air Pressure PSI/BAR		GPH/ LPH		SCFM/ SLPM		Pressure: Air PSI/BAR		Pressure: Liquid PSI/BAR		Width: A in	Width: A cm	Width: B in	Width: B cm	Width: C in	Width: C cm	Max. Depth feet/m		Model
AW8010SS	8	0.6	1.10	4.2	0.31	8.8	14	1.0	1.60	6.1	0.33	9.4	22	1.5	2.00	7.6	0.43	12.3	30	2.1	2.00	7.6	0.61	17.2	44	3.0	2.60	9.8	0.69	19.7	8	0.6	10	0.7	5	13	6.5	17	7.5	19	2	0.6	AW8010SS
	10	0.7	0.70	2.6	0.27	7.6	16	1.1	1.40	5.3	0.43	12.1	26	1.8	1.80	6.8	0.52	14.7	34	2.3	1.80	6.8	0.65	18.4	48	3.3	2.20	8.3	0.87	24.6	16	1.1	20	1.4	6	15	8	20	10	25	3	0.9	
	—	—	—	—	—	—	22	1.5	0.60	2.3	0.60	16.9	—	—	—	—	—	—	—	—	—	—	—	—	65	4.5	0.60	2.3	1.56	44.2	26	1.8	30	2.1	7	18	9.0	23	11	28	4	1.2	
	—	—	—	—	—	—	—	—	—	—	—	—	—	—	—	—	—	—	—	—	—	—	—	—	—	—	—	—	—	—	65	4.5	60	4.1	7	18	10	25	12	30	4	1.2	
AW8020SS	12	0.8	3.73	14.1	1.65	46.7	22	1.5	5.07	19.2	2.28	64.7	30	2.1	6.40	24.2	2.67	75.4	38	2.6	8.00	30.3	3.05	86.2	54	3.7	9.83	37.2	3.81	108	12	0.8	10	0.7	8	20	9.5	24	11	28	6	1.8	AW8020SS
	14	1.0	3.00	11.4	1.90	53.9	24	1.7	4.43	16.8	2.54	71.9	32	2.2	6.00	22.7	2.92	82.6	42	2.9	6.73	25.5	3.55	100.6	56	3.9	9.33	35.3	4.06	115	24	1.7	20	1.4	8	20	10	25	13	33	8	2.4	
	—	—	—	—	—	—	26	1.8	3.83	14.5	2.79	79.0	36	2.5	4.93	18.7	3.43	97.0	46	3.2	5.77	21.8	4.06	115.0	60	4.1	8.33	31.5	4.57	129	36	2.5	30	2.1	8	20	10	25	13	33	10	3.0	
	—	—	—	—	—	—	—	—	—	—	—	—	—	—	—	—	—	—	52	3.6	4.27	16.2	4.82	136.5	75	5.2	5.47	20.7	6.47	183	75	5.2	60	4.1	8	20	10	25	13	33	14	4.3	
AW8030SS	10	0.7	6.37	24.1	1.3	36.8	20	1.4	7.87	29.8	1.87	52.8	30	2.1	10.0	37.9	2.52	71.3	40	2.8	11.3	42.9	3.04	86.0	56	3.9	15.0	56.8	3.21	90.9	12	0.8	10	0.7	7.5	19	10	25	13.5	34	8	2.3	AW8030SS
	12	0.8	5.10	19.3	1.65	46.7	22	1.5	6.73	25.5	2.17	61.4	32	2.2	9.33	35.3	2.73	77.4	42	2.9	10.3	39.1	3.30	93.4	58	4.0	14.5	54.9	3.91	111	22	1.5	20	1.4	7.5	19	10	25	13.5	34	9	2.7	
	14	1.0	3.47	13.1	1.91	54.1	24	1.7	5.93	22.5	2.43	68.8	36	2.5	6.83	25.9	3.39	95.8	46	3.2	8.33	31.5	3.95	111.8	65	4.5	12.0	45.4	4.90	139	36	2.5	30	2.1	7.5	19	10	25	13.5	34	10	3.0	
	—	—	—	—	—	—	26	1.8	4.80	18.2	2.65	75.0	40	2.8	4.07	15.4	4.04	114.3	50	3.4	5.80	22.0	4.47	126.6	75	5.2	6.73	25.5	6.38	181	50	3.4	40	2.8	7.5	19	10	25	13.5	34	11	3.4	
AW8040SS	18	1.2	11.3	42.9	2.89	81.8	30	2.1	14.5	54.9	4.16	117.8	44	3.0	16.3	61.8	5.53	156.5	60	4.1	18.0	68.1	7.04	199.3	80	5.5	22.3	84.5	8.89	252	18	1.2	10	0.7	8	20	10.5	27	12	30	9	2.7	AW8040SS
	26	1.8	9.33	35.3	3.74	105.9	38	2.6	12.7	47.9	5.04	142.8	55	3.8	15.0	56.8	6.72	190.2	80	5.5	14.7	55.5	9.18	259.9	90	6.2	21.0	79.5	9.89	280	38	2.6	20	1.4	8	20	10	25	12	30	11	3.4	
	34	2.3	6.67	25.2	4.58	129.7	60	4.1	6.7	25.2	7.27	205.7	80	5.5	8.67	32.8	9.18	259.9	100	6.9	10.0	37.9	11.1	315.1	—	—	—	—	—	—	55	3.8	30	2.1	7.5	19	10	25	11	28	14	4.3	
	—	—	—	—	—	—	—	—	—	—	—	—	—	—	—	—	—	—	—	—	—	—	—	—	—	—	—	—	—	—	80	5.5	40	2.8	7.5	19	10	25	11	28	15	4.6	

For Technical Assistance, Call an EXAIR Application Engineer 1-800-903-9247
Toll Free FAX (866) 329-3924 • E-mail: techelp@exair.com • www.exair.com

EXAIR_Cat36_25_FROMINDESIGN.indb 72 12/20/24 3:46 PM

An INTELLIGENT COMPRESSED AIR® Product

Internal Mix Flat Fan Pattern - 1/8 NPT



Model: AF8010SS
Material: Type 303 Stainless Steel

Model: AF8020SS
Material: Type 303 Stainless Steel

Model: AF8030SS
Material: Type 303 Stainless Steel

Model: AF8040SS
Material: Type 303 Stainless Steel

Model AF8010SS, AF8020SS, AF8030SS and AF8040SS

1/8 NPT internal mix flat fan pattern atomizing nozzles are designed with efficiency in mind. Especially good for vertical or horizontal assembly lines, their broad thin pattern makes efficient use of your expensive liquids. Their output can be adjusted for a very light film or a heavy coat of whatever liquid you're working with. Whether it's applying paint to hanging sheet metal, or using a water mist to cool a laminate web, flat fan atomizing nozzles cover a wide flat area, ideal for products moving on a conveyor.

For pressure fed applications not requiring independent air and liquid control.

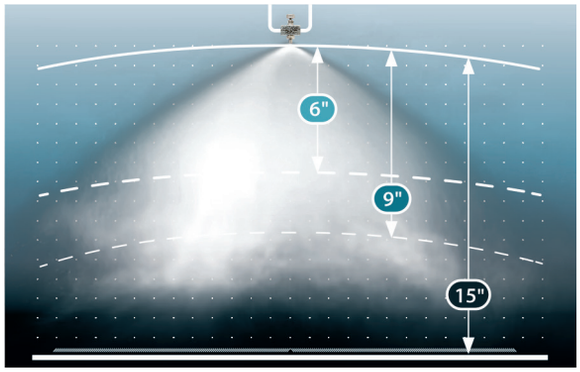

1/8 NPT Internal Mix Flat Fan atomizing nozzles can apply a light or heavy film coat to products moving on a conveyor.

Dimensions and Airflow Pattern

DOWNLOAD drawings at EXAIR.com

No Drip Dimensions In Red
See page 93 for No Drip Atomizing Nozzles

* Model AF9010SS & AF9020SS 2.48" / 63mm
** Model AF8010SS & AF8020SS 1.74" / 44mm
***Model AF8010SS & AF8020SS 0.36" / 9mm

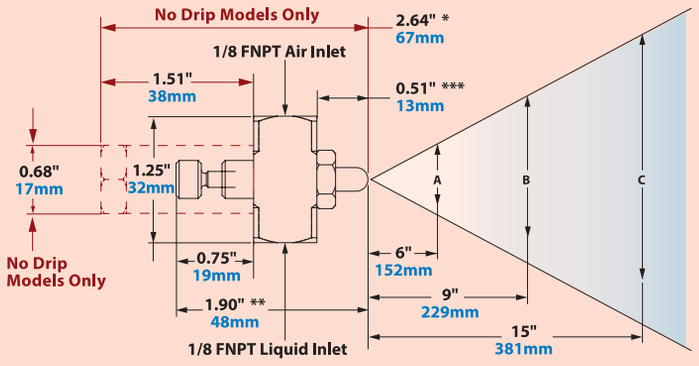

Model	10 PSI/0.7 BAR Liquid: Air Pressure PSI/BAR	GPH/LPH	SCFM/SLPM	20 PSI/1.4 BAR Liquid: Air Pressure PSI/BAR	GPH/LPH	SCFM/SLPM	30 PSI/2.1 BAR Liquid: Air Pressure PSI/BAR	GPH/LPH	SCFM/SLPM	40 PSI/2.8 BAR Liquid: Air Pressure PSI/BAR	GPH/LPH	SCFM/SLPM	60 PSI/4.1 BAR Liquid: Air Pressure PSI/BAR	GPH/LPH	SCFM/SLPM	Spray Dimensions: Pressure Air PSI/BAR	Pressure Liquid PSI/BAR	Width A in/cm	Width B in/cm	Width C in/cm	Max. Depth feet/m	Model
AF8010SS	10 0.7	1.60 6.1	0.71 20.0	18 1.2	2.13 8.1	1.11 31.5	28 1.9	2.63 10.0	1.53 43.4	38 2.6	2.87 10.9	1.95 55.1	55 3.8	3.47 13.1	2.57 72.7	10 0.7	10 0.7	14 36	18 46	25 64	1 0.3	AF8010SS
	14 1.0	1.43 5.4	0.76 21.6	26 1.8	1.87 7.1	1.44 40.7	36 2.5	2.20 8.3	1.94 54.8	46 3.2	2.57 9.7	2.28 64.7	75 5.2	2.93 11.1	3.42 96.9	26 1.8	20 1.4	15 38	22 56	30 76	2 0.6	
	22 1.5	0.93 3.5	1.03 29.1	40 2.8	1.40 5.3	1.94 55.0	55 3.8	1.63 6.2	2.67 75.4	70 4.8	2.07 7.8	3.17 89.8	100 6.9	2.37 9.0	4.33 123	36 2.5	30 2.1	14 36	22 56	30 76	2 0.6	
	— —	— —	— —	— —	— —	— —	— —	— —	— —	— —	— —	— —	— —	— —	— —	100 6.9	60 4.1	22 56	30 76	46 117	3 0.9	
AF8020SS	18 1.2	1.53 5.8	1.04 29.5	30 2.1	2.30 8.7	2.30 65.1	42 2.9	2.87 10.9	2.05 57.9	55 3.8	3.53 13.4	2.56 72.5	75 5.2	4.27 16.2	3.25 91.9	18 1.2	10 0.7	14 36	17 43	24 61	2 0.6	AF8020SS
	22 1.5	1.40 5.3	1.17 33.2	36 2.5	1.90 7.2	1.90 53.8	46 3.2	2.60 9.8	2.20 62.2	65 4.5	2.67 10.1	2.98 84.4	85 5.9	3.67 13.9	3.69 105	36 2.5	20 1.4	18 46	24 61	32 81	3 0.9	
	26 1.8	1.00 3.8	1.29 36.5	40 2.8	1.63 6.2	1.63 46.2	50 3.4	2.20 8.3	2.38 67.5	— —	— —	— —	— —	— —	— —	46 3.2	30 2.1	23 58	29 74	37 94	3 0.9	
	— —	— —	— —	44 3.0	0.85 3.2	0.85 24.1	— —	— —	— —	— —	— —	— —	— —	— —	— —	55 3.8	40 2.8	30 76	34 86	47 119	4 1.2	
AF8030SS	16 1.1	7.83 29.6	1.42 40.3	28 1.9	10.8 41.0	2.00 56.7	38 2.6	13.0 49.2	2.54 71.8	46 3.2	14.7 55.5	2.94 83.1	65 4.5	17.0 64.4	4.00 113	16 1.1	10 0.7	21 53	26 66	32 81	3 0.9	AF8030SS
	18 1.2	7.83 29.6	1.56 44.1	30 2.1	10.7 40.4	2.14 60.4	40 2.8	13.0 49.2	2.67 75.6	50 3.4	14.2 53.6	3.20 90.7	70 4.8	16.7 63.1	4.14 117	30 2.1	20 1.4	24 61	30 76	39 99	4 1.2	
	20 1.4	7.50 28.4	1.69 47.9	32 2.2	10.3 39.1	2.24 63.5	42 2.9	12.5 47.3	2.80 79.3	52 3.6	14.2 53.6	3.28 92.9	75 5.2	16.5 62.5	4.54 128	42 2.9	30 2.1	29 74	36 91	44 112	4 1.2	
	24 1.7	7.43 28.1	1.82 51.6	36 2.5	10.3 39.1	2.49 70.5	46 3.2	12.5 47.3	2.94 83.1	56 3.9	13.7 51.7	3.47 98.2	85 5.9	16.2 61.2	4.76 135	56 3.9	40 2.8	32 81	39 99	47 119	4 1.2	
AF8040SS	12 0.8	11.2 42.3	1.08 30.5	22 1.5	14.8 56.2	1.56 44.1	34 2.3	17.8 67.5	2.15 60.9	46 3.2	20.3 77.0	2.71 76.7	65 4.5	28.0 106	3.61 102	12 0.8	10 0.7	20 51	24 61	31 79	3 0.9	AF8040SS
	14 1.0	10.3 39.1	1.19 33.6	26 1.8	14.3 54.3	1.72 48.7	38 2.6	17.3 65.6	2.28 64.5	50 3.4	19.7 74.4	2.92 82.8	75 5.2	26.3 99.7	4.14 117	26 1.8	20 1.4	25 64	29 74	36 91	4 1.2	
	20 1.4	8.33 31.5	1.51 42.7	34 2.3	12.3 46.7	2.15 60.9	48 3.3	15.3 58.0	2.75 77.9	60 4.1	18.3 69.4	3.36 95.0	90 6.2	23.3 88.3	4.80 136	60 4.1	40 2.8	26 66	31 79	42 107	6 1.8	
	— —	— —	— —	38 2.6	11.7 44.2	2.43 68.7	50 3.4	14.8 56.2	2.88 81.6	70 4.8	17.0 64.4	3.91 111	100 6.9	22.7 85.8	5.33 151	100 6.9	60 4.1	32 81	39 99	44 112	7 2.1	

EXAIR_Cat36_25_FROMINDESIGN.indb 73 12/20/24 3:46 PM

Air Atomizing Spray Nozzles

External Mix Narrow Angle Flat Fan Pattern - 1/8 NPT



Model: EF8010SS
Material: Type 303 Stainless Steel

Model: EF8020SS
Material: Type 303 Stainless Steel

Model: EF8030SS
Material: Type 303 Stainless Steel

Model: EF8040SS
Material: Type 303 Stainless Steel

Model: EF8050SS
Material: Type 303 Stainless Steel

Model EF8010SS, EF8020SS, EF8030SS, EF8040SS and EF8050SS

1/8 NPT external mix narrow angle flat fan pattern nozzles are great where liquid is needed over a more concentrated area than the internal mix flat fan nozzles. Since they are external mix, airflow and liquid flow can be controlled independently. External mix flat fan pattern nozzles are the best choice where thicker liquids for a heavier coating are needed over a narrow band, such as a paint line.

For pressure fed applications with independent air and liquid contro'

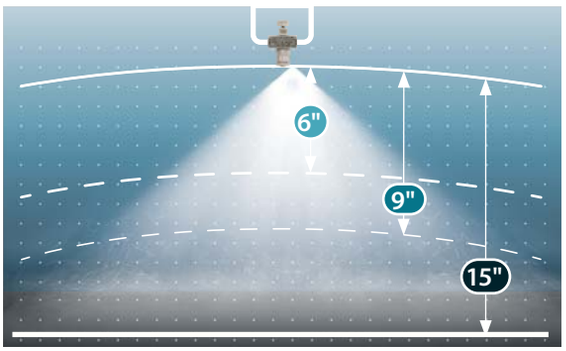

1/8 NPT External Mix Flat Fan atomizing nozzles are very versatile. They can apply a light or heavy film coating to products on a variety of different products.



Model EF8010SS applies lubricant to a drawer slide.

Dimensions and Airflow Pattern

DOWNLOAD drawings at EXAIR.com

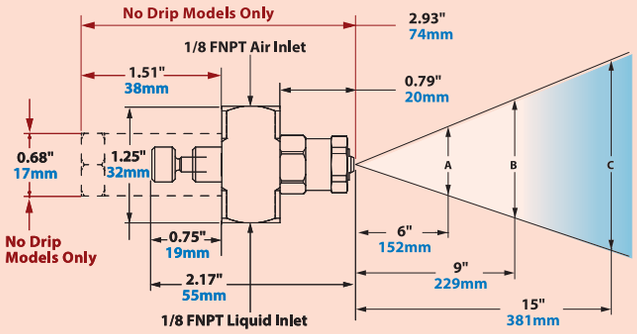

No Drip Dimensions In Red
See page 93 for No Drip Atomizing Nozzles

Model	10 PSI/0.7 BAR Liquid						20 PSI/1.4 BAR Liquid						30 PSI/2.1 BAR Liquid						40 PSI/2.8 BAR Liquid						Spray Dimensions												Model
	Air Pressure PSI/BAR		GPH/LPH		SCFM/ SLPM		Air Pressure PSI/BAR		GPH/LPH		SCFM/ SLPM		Air Pressure PSI/BAR		GPH/LPH		SCFM/ SLPM		Air Pressure PSI/BAR		GPH/LPH		SCFM/ SLPM		Pressure				Width						Max. Depth feet/m		
																									Air PSI/ BA R		Liquid PSI/ BAR		A		B		C				
																													in	cm	in	cm	in	cm			
EF8010SS	10	0.7	1.22	4.6	1.20	34.0	10	0.7	1.64	6.2	1.20	34.0	10	0.7	1.82	6.9	1.20	34.0	10	0.7	2.00	7.6	1.20	34.0	10	0.7	10	0.7	4	10	5	13	4	10	4	1.2	EF8010SS
	30	2.1			2.29	64.8	30	2.1			2.29	64.8	30	2.1			2.29	64.8	30	2.1			2.29	64.8	30	2.1	20	1.4	4	10	5	13	6	15	6	1.8	
	50	3.4			3.41	96.5	50	3.4			3.41	96.5	50	3.4			3.41	96.5	50	3.4			3.41	96.5	30	2.1	30	2.1	4	10	5	13	6	15	6	1.8	
	---	---			---	---	---	---			---	---	---	---			---	---	---	---			---	---	50	3.4	40	2.8	4	10	5	13	8	20	8	2.4	
EF8020SS	10	0.7	2.00	7.6	1.20	34.0	10	0.7	2.56	9.7	1.20	34.0	10	0.7	2.67	10.1	1.20	34.0	10	0.7	2.93	11.1	1.20	34.0	10	0.7	10	0.7	3	8	4.5	11	4	10	4	1.2	EF8020SS
	30	2.1			2.29	64.8	30	2.1			2.29	64.8	30	2.1			2.29	64.8	30	2.1			2.29	64.8	30	2.1	20	1.4	3	8	4.5	11	6	15	6	1.8	
	50	3.4			3.41	96.5	50	3.4			3.41	96.5	50	3.4			3.41	96.5	50	3.4			3.41	96.5	30	2.1	30	2.1	3	8	4.5	11	7	18	7	2.1	
	---	---			---	---	---	---			---	---	---	---			---	---	---	---			---	---	50	3.4	40	2.8	3	8	4.5	11	8	20	8	2.4	
EF8030SS	10	0.7	4.47	16.9	1.20	34.0	10	0.7	5.60	21.2	1.20	34.0	10	0.7	6.30	23.8	1.20	34.0	10	0.7	7.67	29.0	1.20	34.0	10	0.7	10	0.7	4	10	5	13	5	13	5	1.5	EF8030SS
	30	2.1			2.29	64.8	30	2.1			2.29	64.8	30	2.1			2.29	64.8	30	2.1			2.29	64.8	30	2.1	20	1.4	4	10	5	13	7	18	7	2.1	
	50	3.4			3.41	96.5	50	3.4			3.41	96.5	50	3.4			3.41	96.5	50	3.4			3.41	96.5	30	2.1	30	2.1	4	10	5	13	8	20	8	2.4	
	---	---			---	---	---	---			---	---	---	---			---	---	---	---			---	---	50	3.4	40	2.8	4	10	5	13	9	23	9	2.7	
EF8040SS	20	1.4	8.67	32.8	1.95	55.2	20	1.4	10.75	40.7	1.95	55.2	20	1.4	13.00	49.2	1.95	55.2	20	1.4	14.42	54.6	1.95	55.2	20	1.4	10	0.7	5.5	14	7	18	7	18	7	2.1	EF8040SS
	30	2.1			2.50	70.8	30	2.1			2.5	70.8	30	2.1			2.5	70.8	30	2.1			2.5	70.8	30	2.1	20	1.4	5.5	14	7	18	9	23	9	2.7	
	40	2.8			3.13	88.6	40	2.8			3.13	88.6	40	2.8			3.13	88.6	40	2.8			3.13	88.6	40	2.8	30	2.1	5.5	14	7	18	10	25	10	3.0	
	50	3.4			3.68	104.2	50	3.4			3.68	104.2	50	3.4			3.68	104.2	50	3.4			3.68	104	50	3.4	40	2.8	5.5	14	7	18	11	28	11	3.4	
EF8050SS	30	2.1	12.6	47.7	2.28	64.5	30	2.1	16.6	62.8	2.28	64.5	30	2.1	20.17	76.4	2.28	64.5	30	2.1	25.00	94.6	2.28	64.5	30	2.1	10	0.7	7	18	9	23	9	23	9	2.7	EF8050SS
	40	2.8			2.84	80.4	40	2.8			2.84	80.4	40	2.8			2.84	80.4	40	2.8			2.84	80.4	40	2.8	20	1.4	7	18	9	23	10	25	10	3.0	
	60	4.1			3.87	109.6	60	4.1			3.87	109.6	60	4.1			3.87	109.6	60	4.1			3.87	110	70	4.8	40	2.8	7	18	9	23	12	30	12	3.7	
	70	4.8			4.45	126.0	70	4.8			4.45	126.0	70	4.8			4.45	126.0	70	4.8			4.45	126													

For Technical Assistance, Call an EXAIR Application Engineer 1-800-903-9247
Toll Free FAX (866) 329-3924 • E-mail: techelp@exair.com • www.exair.com

EXAIR_Cat36_25_FROMINDESIGN.indb 74 12/20/24 3:46 PM

An INTELLIGENT COMPRESSED AIR® Product

Siphon Fed Round Pattern - 1/8 NPT



Model: SR8010SS
Material: Type 303 Stainless Steel

Model: SR8020SS
Material: Type 303 Stainless Steel

Model: SR8030SS
Material: Type 303 Stainless Steel

Model: SR8040SS
Material: Type 303 Stainless Steel

Model: SR8050SS
Material: Type 303 Stainless Steel

Model SR8010SS, SR8020SS, SR8030SS, SR8040SS and SR8050SS

1/8 NPT siphon fed round pattern nozzles are great where no liquid pressure is available and a thin coating is needed at a specific area. Flow rate is adjustable via the adjusting valve. Siphon nozzles work best with a suction height of 36" (914mm) or less. Since these nozzles are siphon fed, the compressed airflow draws the liquid in and mixes it internally. Liquid flow is dependent both on the gravity or suction height and the airflow. Siphon fed round pattern nozzles provide the most liquid flow of any siphon fed nozzle.

Siphon or gravity fed for non-pressurized applications.

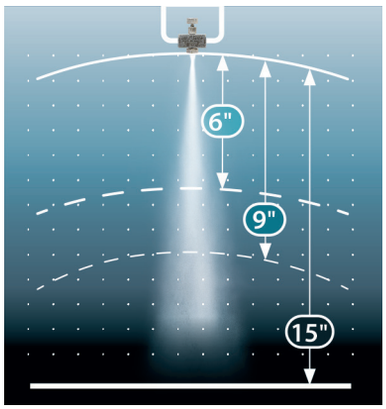

The amount of liquid applied by the Siphon Fed atomizing nozzles varies depending on valve or inlet pressures.

Dimensions and Airflow Pattern

DOWNLOAD drawings at EXAIR.com

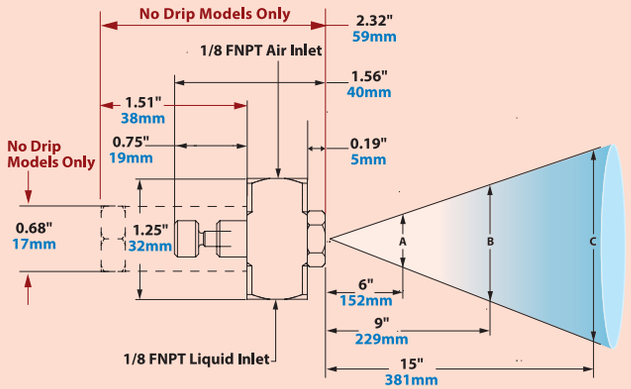

No Drip Only Dimensions in Red
See page 93 for No Drip Atomizing Nozzles

Liquid Flow in GPH/LPH																						Spray Dimensions at 8" (20cm) Siphon Height										
Model	Air				Gravity Head						Siphon Height										Model	Air		Width						Max. Depth	
	Pressure PSI/BAR		SCFM/ SLPM		18"	46cm	12"	30cm	6"	15cm	4"	10cm	8"	20cm	12"	30cm	24"	61cm	36"	91cm		Pressure PSI/BAR		A in	A cm	B in	B cm	C in	C cm	feet/m		
SR8010SS	10	0.7	0.48	13.6	0.35	1.3	0.33	1.2	0.27	1.0	0.21	0.8	0.21	0.8	0.17	0.7	—	—	—	—	SR8010SS	10	0.7	1.5	4	2	5	3	8	1.5	0.5	SR8010SS
	20	1.4	0.68	19.2	0.41	1.6	0.40	1.5	0.43	1.6	0.27	1.0	0.26	1.0	0.24	0.9	0.23	0.9	—	—		20	1.4	1.5	4	2	5	3	8	1.5	0.5	
	40	2.8	1.35	38.3	0.49	1.9	0.48	1.8	0.46	1.7	0.35	1.3	0.32	1.2	0.30	1.1	0.26	1.0	0.23	0.9		40	2.8	1.5	4	2	5	3	8	2	0.6	
	60	4.1	2.12	59.9	0.53	2.0	0.52	2.0	0.50	1.9	0.40	1.5	0.42	1.6	0.33	1.3	0.28	1.1	0.25	0.9		60	4.1	1.5	4	2	5	3	8	3	0.9	
SR8020SS	10	0.7	0.59	16.7	0.61	2.3	0.53	2.0	0.48	1.8	0.35	1.3	0.33	1.2	0.24	0.9	—	—	—	—	SR8020SS	10	0.7	1.5	4	2	5	3	8	1.5	0.5	SR8020SS
	20	1.4	1.16	32.8	0.73	2.8	0.7	2.6	0.66	2.5	0.58	2.2	0.55	2.1	0.4	1.5	0.35	1.3	—	—		20	1.4	1.5	4	2	5	3	8	2	0.6	
	40	2.8	1.9	53.8	0.88	3.3	0.8	3.0	0.76	2.9	0.66	2.5	0.58	2.2	0.53	2.0	0.45	1.7	0.38	1.4		40	2.78	1.5	4	2	5	3	8	3	0.9	
	60	4.1	2.62	74.2	0.96	3.6	0.92	3.5	0.82	3.1	0.75	2.8	0.68	2.6	0.6	2.3	0.52	2.0	0.46	1.7		60	4.1	1.5	4	2	5	3	8	4	1.2	
SR8030SS	10	0.7	0.55	15.6	1.31	5.0	1.22	4.6	0.96	3.6	0.76	2.9	0.61	2.3	0.53	2.0	—	—	—	—	SR8030SS	10	0.7	1.5	4	2	5	3	8	1.5	0.5	SR8030SS
	20	1.4	1.06	30.0	1.66	6.3	1.59	6.0	1.23	4.7	1.07	4.1	1.13	4.3	0.92	3.5	0.76	2.9	—	—		20	1.4	1.5	4	2	5	3	8	3	0.9	
	40	2.8	1.86	52.7	1.89	7.2	1.8	6.8	1.53	5.8	1.34	5.1	1.49	5.6	1.19	4.5	1.05	4.0	0.82	3.1		40	2.78	1.5	4	2	5	3	8	4	1.2	
	60	4.1	2.45	69.4	1.98	7.5	1.86	7.0	1.58	6.0	1.46	5.5	1.74	6.6	1.34	5.1	1.29	4.9	1.04	3.9		60	4.1	1.5	4	2	5	3	8	5	1.5	
SR8040SS	10	0.7	1.40	39.5	2.65	10.0	2.43	9.2	2.12	8.0	1.22	4.6	1.00	3.8	—	—	—	—	—	—	SR8040SS	10	0.7	1.5	4	2	5	3	8	3	0.9	SR8040SS
	20	1.4	2.03	57.5	3.01	11.4	2.86	10.8	2.53	9.6	1.78	6.7	1.57	6.0	1.37	5.2	—	—	—	—		20	1.4	1.5	4	2	5	3	8	4	1.2	
	40	2.8	3.17	89.8	3.58	13.6	3.55	13.4	3.29	12.0	2.54	9.6	2.48	9.4	2.18	8.2	1.98	7.5	1.22	4.6		40	2.78	1.5	4	2	5	3	8	4	1.2	
	60	4.1	4.42	125	4.09	15.5	3.99	15.1	3.75	14.0	3.03	11.5	2.98	11.3	2.85	11.0	2.59	9.8	2.11	8.0		60	4.1	1.5	4	2	5	3	8	5	1.5	
SR8050SS	10	0.7	1.84	52.1	1.84	7.0	4.16	15.7	3.83	14.0	3.28	12.4	3.1	11.7	2.45	9.3	0.74	2.8	—	—	SR8050SS	20	1.4	1.5	4	2	5	3	8	5	1.5	SR8050SS
	20	1.4	2.93	82.9	2.93	11.1	5.53	20.9	3.7	14.0	4.12	15.6	3.51	13.3	3.98	15.0	3.35	12.7	1.8	6.8		40	2.8	1.5	4	2	5	3	8	7	2.1	
	40	2.8	4.02	114	4.02	15.2	5.83	22.1	4.39	17.0	4.6	17.4	4.31	16.3	5.08	19.0	4.16	15.7	2.93	11.1		60	4.1	1.5	4	2	5	3	8	9	2.7	
	60	4.1	5.12	145	5.12	19.4	5.92	22.4	5.56	21.0	5.5	20.8	5.09	19.3	5.33	20.0	5.18	19.6	3.84	14.5		80	5.5	1.5	4	2	5	3	8	10	3.0	

EXAIR_Cat36_25_FROMINDESIGN.indb 75 12/20/24 3:46 PM

Air Atomizing Spray Nozzles

Siphon Fed Flat Fan Pattern - 1/8 NPT



Model: SF8010SS
Material: Type 303 Stainless Steel

Model: SF8020SS
Material: Type 303 Stainless Steel

Model: SF8030SS
Material: Type 303 Stainless Steel

Model SF8010SS, SF8020SS and SF8030SS

1/8 NPT siphon fed flat fan pattern nozzles are great where no liquid pressure is available and a thin coating is needed over a wide band. Flow rate is adjustable via the adjusting valve. Siphon nozzles work best with a suction height of 36" (914mm) or less. Since these nozzles are siphon fed, the compressed airflow draws the liquid in and mixes it internally. Liquid flow is dependent both on the gravity or suction height and the airflow. Siphon fed flat fan pattern nozzles are the best choice where liquid is needed over a broad band such as a moving assembly line.

Siphon or gravity fed for non-pressurized applications.

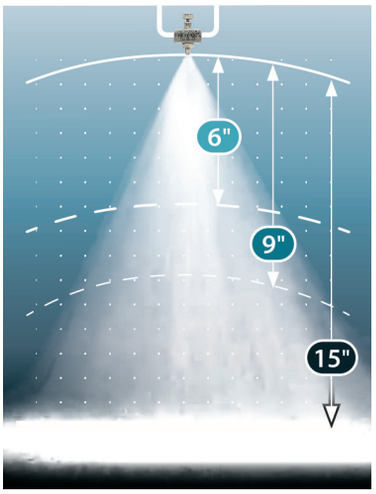

1/8 NPT Siphon Fed Flat Fan atomizing nozzles apply a light coating of liquid over a wide band.

Dimensions and Airflow Pattern

DOWNLOAD drawings at EXAIR.com

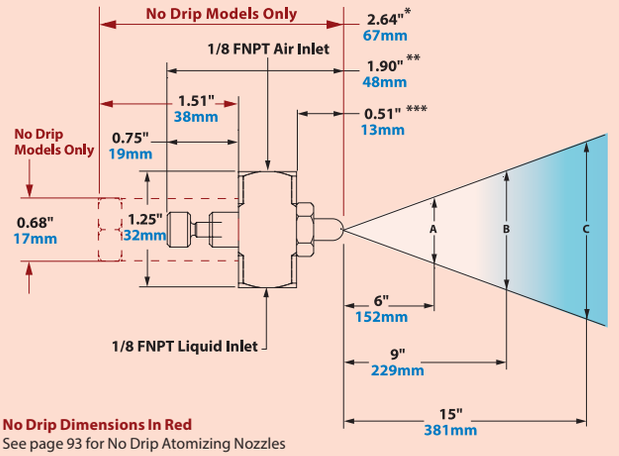

No Drip Dimensions In Red
See page 93 for No Drip Atomizing Nozzles

* Model SF8010SS 2.48" / 63mm
** Model SF8010SS 1.74" / 44mm
***Model SF8010SS 0.36" / 9mm

Liquid Flow in GPH/LPH

Model	Air Pressure PSI/BAR		Air SCFM/SLPM		Gravity Head 18"	46cm	12"	30cm	6"	15cm	Siphon Height 4"	10cm	8"	20cm	12"	30cm	24"	61cm	36"	91cm
SF8010SS	10	0.7	1.07	30.3	0.32	1.2	0.30	1.1	0.25	1.0	0.24	0.9	0.23	0.9	0.18	0.7	0.17	0.7	0.14	0.5
	20	1.4	1.31	37.1	0.36	1.4	0.35	1.3	0.31	1.2	0.31	1.2	0.30	1.1	0.25	0.9	0.23	0.9	0.19	0.7
	60	4.1	1.69	47.9	0.43	1.6	0.40	1.5	0.35	1.3	0.34	1.3	0.32	1.2	0.27	1.0	0.26	1.0	0.24	0.9
SF8020SS	20	1.4	1.81	51.3	1.52	5.8	1.33	5.0	1.10	4.2	0.80	0.9	0.76	2.9	0.71	2.7	0.50	1.9	0.36	1.4
	30	2.1	2.30	65.1	1.18	4.5	1.16	4.4	1.06	4.0	0.85	3.2	0.79	3.0	0.77	2.9	0.52	2.0	0.44	1.7
	40	2.8	2.83	80.2	1.01	3.8	0.90	3.4	0.83	3.1	0.70	2.6	0.67	2.5	0.63	2.4	0.42	1.6	0.27	1.0
	50	3.4	3.34	94.6	0.85	3.2	0.71	2.7	0.59	2.2	0.48	1.8	0.41	1.6	0.51	1.9	0.32	1.2	---	---
SF8030SS	20	1.4	1.78	50.3	1.45	5.5	1.40	5.3	1.38	5.2	0.94	3.6	0.90	3.4	0.77	2.9	0.72	2.7	0.61	2.3
	30	2.1	2.24	63.5	1.16	4.4	1.12	4.2	1.10	4.2	1.00	3.8	0.98	3.7	0.86	3.2	0.81	3.1	0.69	2.6
	40	2.8	2.75	77.8	0.98	3.7	0.96	3.6	0.85	3.2	0.90	3.4	0.87	3.3	0.79	3.0	0.66	2.5	0.52	2.0
	50	3.4	3.00	85.0	0.83	3.2	0.79	3.0	0.70	2.6	0.75	2.8	0.69	2.6	0.66	2.5	0.51	1.9	0.44	1.7

Spray Dimensions at 8" (20cm) Siphon Height

Model	Air Pressure PSI/BAR		Width A in	A cm	B in	B cm	C in	C cm	Max. Depth feet/m		Model
SF8010SS	10	0.7	7	18	9	23	12	30	2	0.6	SF8010SS
	20	1.4	7	18	9	23	12	30	2	0.6	
	30	2.1	7	18	9	23	12	30	2	0.6	
SF8020SS	20	1.4	8	20	9	23	12	30	2	0.6	SF8020SS
	30	2.1	9	23	11	28	13	33	2	0.6	
	40	2.8	9	23	10	25	13	33	2	0.6	
	50	3.4	7	18	8	20	9	23	3	0.9	
SF8030SS	20	1.4	7	18	8	20	9.5	24	2	0.6	SF8030SS
	30	2.1	7	18	8	20	9.5	24	2	0.6	
	40	2.8	7	18	8	20	9.5	24	3	0.9	
	50	3.4	7	18	8	20	9.5	24	3	0.9	

EXAIR_Cat36_25_FROMINDESIGN.indb 76 12/20/24 3:46 PM

An INTELLIGENT COMPRESSED AIR® Product

KING awards 2011 WINNER

Plant Engineering PRODUCT of the YEAR Finalist 2011

Internal Mix Narrow Angle Round Pattern - 1/4 NPT



Model: AN1010SS
Material: Type 303 Stainless Steel

Model: AN1020SS
Material: Type 303 Stainless Steel

Model: AN1030SS
Material: Type 303 Stainless Steel

Model: AN1040SS
Material: Type 303 Stainless Steel

Model AN1010SS, AN1020SS, AN1030SS, and AN1040SS

1/4 NPT internal mix narrow angle round pattern nozzles are excellent for spraying a concentrated mist of liquid. Because of the versatility of their adjustments, they can apply a heavy coat up close or send a very fine mist over 30 feet away! They are often used for precision application of lubricants during assembly, or marking items as they move through an assembly line. Narrow angle round pattern atomizing nozzles are capable of delivering the most liquid of any of our 1/4 NPT internal mix atomizing nozzles.

For pressure fed applications not requiring independent air and liquid control.



The amount of liquid applied can be greatly varied by adjusting the valve or inlet pressures.

Dimensions and Airflow Pattern

DOWNLOAD drawings at EXAIR.com

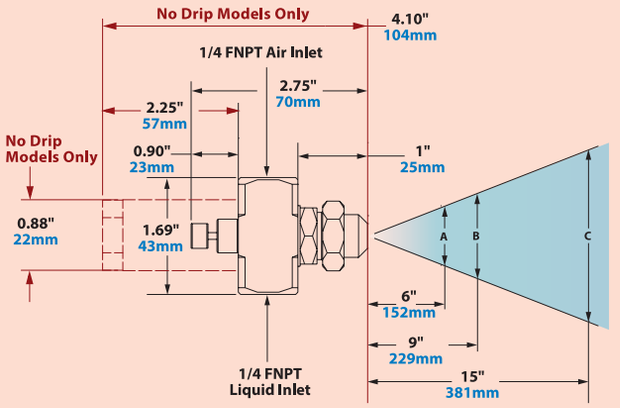

No Drip Only Dimensions in Red
See page 93 for No Drip Atomizing Nozzles

Model	10 PSI/0.7 BAR Liquid: Air Pressure PSI/BAR		GPH/LPH		SCFM/SLPM		20 PSI/1.4 BAR Liquid: Air Pressure PSI/BAR		GPH/LPH		SCFM/SLPM		30 PSI/2.1 BAR Liquid: Air Pressure PSI/BAR		GPH/LPH		SCFM/SLPM		40 PSI/2.8 BAR Liquid: Air Pressure PSI/BAR		GPH/LPH		SCFM/SLPM		60 PSI/4.1 BAR Liquid: Air Pressure PSI/BAR		GPH/LPH		SCFM/SLPM		Model
AN1010SS	10	0.7	1.4	5.3	0.6	17	18	1.2	1.8	6.8	0.9	25	24	1.7	2.3	8.7	1.0	28	30	2.1	2.7	10.2	1.2	34	40	2.8	3.3	12.5	1.5	42	AN1010SS
	12	0.8	1.2	4.5	0.7	20	22	1.5	1.6	6.1	1.0	28	32	2.2	1.9	7.2	1.3	37	38	2.6	2.3	8.7	1.5	42	52	3.6	2.8	10.6	1.9	54	
	14	1.0	1.1	4.2	0.8	23	24	1.7	1.5	5.7	1.1	31	36	2.5	1.6	6.1	1.5	42	44	3.0	1.9	7.2	1.7	48	62	4.3	2.3	8.7	2.4	68	
	---	---	---	---	---	---	26	1.8	1.3	4.9	1.2	34	40	2.8	1.3	4.9	1.7	48	48	3.3	1.7	6.4	2.0	57	70	4.8	1.9	7.2	2.8	79	
AN1020SS	16	1.1	3.7	14.0	2.8	79	28	1.9	5.2	19.7	4.0	113	40	2.8	6.0	22.7	5.2	147	48	3.3	7.0	26.5	5.9	167	65	4.5	9.9	37.5	7.0	198	AN1020SS
	20	1.4	2.5	9.5	3.4	96	36	2.5	2.7	10.2	5.1	144	48	3.3	3.8	14.4	6.4	181	65	4.5	3.6	13.6	8.1	229	80	5.5	6.6	25.0	8.6	244	
	24	1.7	1.4	5.3	4.0	113	40	2.8	1.7	6.4	5.7	161	55	3.8	2.1	7.9	7.3	207	75	5.2	1.4	5.3	9.8	277	90	6.2	4.5	17.0	10.1	286	
	28	1.9	0.6	2.3	4.6	130	44	3.0	0.8	3.0	6.4	181	60	4.1	1.1	4.2	8.1	229	80	5.5	0.8	3.0	10.2	289	100	6.9	2.4	9.1	11.3	320	
AN1030SS	12	0.8	7.8	29.5	1.9	54	20	1.4	12.9	48.8	2.5	71	30	2.1	15.1	57.2	3.4	96	38	2.6	18.0	68.1	4.1	116	54	3.7	23.0	87.1	5.3	150	AN1030SS
	14	1.0	6.0	22.7	2.2	62	24	1.7	9.8	37.1	3.0	85	38	2.6	9.4	35.6	4.5	127	46	3.2	13.1	49.6	5.1	144	65	4.5	17.1	64.7	6.7	190	
	16	1.1	4.4	16.7	2.6	74	28	1.9	7.0	26.5	3.6	102	42	2.9	7.0	26.5	5.1	144	52	3.6	9.6	36.3	6.0	170	75	5.2	12.3	46.6	8.0	227	
	18	1.2	3.3	12.5	2.9	82	32	2.2	4.1	15.5	4.4	125	46	3.2	5.0	18.9	5.9	167	56	3.9	7.3	27.6	6.6	187	85	5.9	7.3	27.6	9.6	272	
AN1040SS	14	1.0	6.3	23.8	3.5	99	20	1.4	24.0	90.8	3.0	85	28	1.9	33.0	125	3.4	96	32	2.2	46.5	176	2.8	79	42	2.9	66.0	250	2.7	76	AN1040SS
	16	1.1	3.0	11.4	4.2	119	24	1.7	13.0	49.2	4.2	119	32	2.2	24.0	90.8	4.6	130	40	2.8	30.0	114	5.1	144	50	3.4	54.0	204	4.3	122	
	---	---	---	---	---	---	26	1.8	9.0	34.1	4.9	139	36	2.5	12.5	47.3	5.9	167	46	3.2	16.5	62.5	6.8	193	58	4.0	39.0	148	6.6	187	
	---	---	---	---	---	---	28	1.9	5.5	20.8	5.6	159	40	2.8	6.0	22.7	7.4	210	50	3.4	10.3	39.0	8.2	232	70	4.8	15.8	60	10.2	289	

Spray Dimensions: Air Pressure PSI/BAR	Liquid Pressure PSI/BAR	Width A in	A cm	B in	B cm	C in	C cm	Max. Depth feet/m		Model
12	0.8	10	0.7	2.3	6	3.3	8	5.0	13	6	1.8	AN1010SS
20	1.4	20	1.4	2.8	7	3.8	10	6.0	15	8	2.4	
34	2.3	30	2.1	3.0	8	4.3	11	6.5	17	9	2.7	
42	2.9	40	2.8	3.5	9	4.5	11	6.5	17	10	3.0	
58	4.0	60	4.1	4.0	10	5.0	13	7.0	18	11	3.4	
24	1.7	10	0.7	2.5	6	3.5	9	5.5	14	11	3.4	AN1020SS
38	2.6	20	1.4	2.8	7	4.0	10	6.5	17	12	3.7	
55	3.8	30	2.1	3.0	8	4.5	11	6.5	17	13	4.0	
65	4.5	40	2.8	3.5	9	5.0	13	7.0	18	14	4.3	
85	5.9	60	4.1	4.0	10	5.5	14	7.5	19	18	5.5	
14	1.0	10	0.7	2.8	7	4.5	11	6.5	17	10	3.0	AN1030SS
26	1.8	20	1.4	3.3	8	5.0	13	7.0	18	16	4.9	
40	2.8	30	2.1	3.8	10	5.5	14	7.0	18	19	5.8	
50	3.4	40	2.8	4.0	10	6.0	15	8.0	20	22	6.7	
70	4.8	60	4.1	4.0	10	6.0	15	8.0	20	26	7.9	
14	1.0	10	0.7	3.0	8	4.5	11	6.5	17	17	5.2	AN1040SS
24	1.7	20	1.4	3.5	9	6.0	15	7.5	19	21	6.4	
34	2.3	30	2.1	4.0	10	6.5	17	8.0	20	26	7.9	
44	3.0	40	2.8	4.5	11	7.0	18	8.5	22	30	9.1	
64	4.4	60	4.1	5.0	13	7.0	18	9.0	23	35	10.7	

EXAIR_Cat36_25_FROMINDESIGN.indb 77 12/20/24 3:46 PM

Air Atomizing Spray Nozzles

An INTELLIGENT COMPRESSED AIR® Product

Internal Mix Wide Angle Round Pattern - 1/4 NPT

KING awards 2011 WINNER

Plant Engineering PRODUCT of the YEAR Finalist 2011



Model: AW1010SS
Material: Type 303 Stainless Steel

Model: AW1020SS
Material: Type 303 Stainless Steel

Model: AW1030SS
Material: Type 303 Stainless Steel

Model: AW1040SS
Material: Type 303 Stainless Steel

Model AW1010SS, AW1020SS, AW1030SS, and AW1040SS

EXAIR's 1/4 NPT internal mix wide angle round pattern atomizing nozzles are great for covering a broad area. They can be adjusted for a light mist or a heavy soaking spray. They are popular for dust mitigation, humidification, and cooling of products, people or livestock in a broad area. These nozzles are also perfect for applying a coating to parts packed in large containers, for example, misting a container of stamped steel parts with oil to prevent oxidation during shipment.

For pressure fed applications not requiring independent air and liquid control.



A Model AW1030SS is used to keep dust down during charcoal briquette production.

Dimensions and Airflow Pattern

DOWNLOAD drawings at EXAIR.com

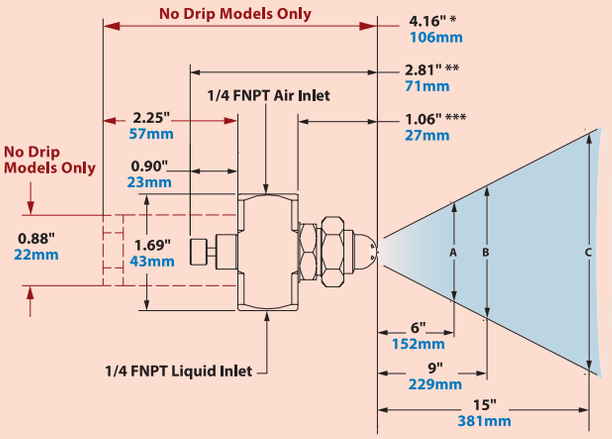

*Model AW2010SS: 4.03" / 102mm
**Model AW1010SS: 2.68" / 68mm
***Model AW1010SS: 0.93" / 24mm

No Drip Only Dimensions in Red
See page 93 for No Drip Atomizing Nozzles

Model	10 PSI/0.7 BAR Liquid						20 PSI/1.4 BAR Liquid						30 PSI/2.1 BAR Liquid						40 PSI/2.8 BAR Liquid						60 PSI/4.1 BAR Liquid					
	Air Pressure PSI/BAR		GPH/ LPH		SCFM/ SLPM		Air Pressure PSI/BAR		GPH/ LPH		SCFM/ SLPM		Air Pressure PSI/BAR		GPH/ LPH		SCFM/ SLPM		Air Pressure PSI/BAR		GPH/ LPH		SCFM/ SLPM		Air Pressure PSI/BAR		GPH/ LPH		SCFM/ SLPM	
AW1010SS	8	0.6	1.8	6.8	0.3	8	14	1.0	2.4	9.1	0.4	11	22	.5	2.7	10.2	0.5	14	30	2.1	3.0	11.4	0.7	20	44	3.0	3.5	13.2	0.9	25
	10	0.7	1.6	6.1	0.4	11	18	1.2	2.1	7.9	0.5	14	30	2.1	2.3	8.7	0.7	20	38	2.6	2.6	9.8	0.8	23	55	3.8	3.1	11.7	1.1	31
	12	0.8	1.5	5.7	0.4	11	22	1.5	1.9	7.2	0.6	17	36	2.5	1.9	7.2	0.8	23	46	3.2	2.1	7.9	1.0	28	65	4.5	2.5	9.5	1.3	37
	14	1.0	1.3	4.9	0.5	14	26	1.8	1.6	6.1	0.7	20	40	2.8	1.6	6.1	0.9	25	50	3.4	1.9	7.2	1.1	31	75	5.2	2.1	7.9	1.5	42
AW1020SS	12	0.8	2.8	10.6	1.7	48	22	1.5	4.0	15.1	2.3	65	30	2.1	5.4	20.4	2.5	71	38	2.6	6.4	24.2	2.9	82	54	3.7	8.5	32.2	3.5	99
	14	1.0	1.6	6.1	2.0	57	24	1.7	3.1	11.7	2.5	71	34	2.3	3.8	14.4	3.2	91	44	3.0	4.4	16.7	3.9	110	58	4.0	7.0	26.5	4.1	116
	---	---	---	---	---	---	6	1.8	2.0	7.6	2.9	82	38	2.6	1.8	6.8	4.0	113	48	3.3	2.6	9.8	4.6	130	65	4.5	5.4	20.4	5.2	147
	---	---	---	---	---	---	---	---	---	---	---	---	40	2.8	0.9	3.4	4.5	127	52	3.6	1.0	3.8	5.4	153	75	5.2	1.7	6.4	7.1	201
AW1030SS	10	0.7	6.8	25.7	1.1	31	20	1.4	8.5	32.2	1.5	42	30	2.1	9.0	34.1	2.0	57	40	2.8	10.0	37.9	2.6	74	56	3.9	15.0	56.8	2.9	82
	12	0.8	4.5	17.0	1.4	40	22	1.5	6.0	22.7	1.9	54	34	2.3	5.8	22.0	2.8	79	44	3.0	7.0	26.5	3.4	96	60	4.1	12.0	45.4	3.5	99
	14	1.0	2.2	8.3	1.9	54	24	1.7	4.5	17.0	2.3	65	38	2.6	2.4	9.1	3.8	108	48	3.3	3.7	14.0	4.2	119	70	4.8	5.0	18.9	5.6	159
	---	---	---	---	---	---	26	1.8	2.6	9.8	2.7	76	40	2.8	1.4	5.3	4.3	122	52	3.6	1.5	5.7	5.2	147	80	5.5	0.8	3.0	7.7	218
AW1040SS	24	1.7	6.0	22.7	5.4	153	38	2.6	9.3	35.2	7.7	218	48	3.3	15.5	58.7	8.4	238	60	4.1	19.3	73.1	10.3	292	85	5.9	4.0	91.0	13.8	391
	28	1.9	4.0	15.1	6.1	190	44	3.0	3.5	13.2	10.0	283	56	3.9	9.0	34.1	10.6	300	70	4.8	12.0	45.4	12.8	362	95	6.6	18.5	70.0	16.5	467
	30	2.1	2.5	9.5	6.7	190	48	3.3	3.5	13.2	10.0	283	62	4.3	6.0	22.7	12.1	343	80	5.5	6.5	24.6	14.7	416	95	6.6	18.5	70.0	16.5	467
	32	2.2	2.0	7.6	7.3	207	52	3.6	1.9	7.2	10.8	306	90	6.2	2.8	10.6	17.2	487	100	6.9	15.8	59.8	17.3	490	100	6.9	15.8	59.8	17.3	490

Spray Dimensions													
Pressure				Width						Max. Depth			
Air PSI/ BAR		Liquid PSI/BAR		A		B		C				Model
				in	cm	in	cm	in	cm	feet/m			
10	0.7	10	0.7	7	18	9	23	14	36	5	1.5	AW1010SS
20	1.4	20	1.4	9	23	11	28	15	38	6	1.8		
34	2.3	30	2.1	10	25	12	30	16	41	8	2.4		
42	2.9	40	2.8	10	25	12	30	16	41	9	2.7		
60	4.1	60	4.1	10	25	12	30	16	41	12	3.7		
12	0.8	10	0.7	10	25	13	33	17	43	9	2.7	AW1020SS	
24	1.7	20	1.4	11	28	13	33	18	46	11	3.4		
34	2.3	30	2.1	11	28	13	33	18	46	12	3.7		
46	3.2	40	2.8	11	28	14	36	18	46	14	4.3		
60	4.1	60	4.1	11	28	14	36	19	48	16	4.9		
12	0.8	10	0.7	10	25	13	33	18	46	9	2.7	AW1030SS	
22	1.5	20	1.4	11	28	13	33	18	46	11	3.4		
34	2.3	30	2.1	11	28	14	36	18	46	13	4.0		
46	3.2	40	2.8	11	28	14	36	19	48	15	4.6		
65	4.5	60	4.1	11	28	14	36	20	51	19	5.8		
28	1.9	10	0.7	10	25	14	36	16	41	16	4.9	AW1040SS	
46	3.2	20	1.4	11	28	14	36	18	46	18	5.5		
60	4.1	30	2.1	12	30	16	41	21	53	21	6.4		
75	5.2	40	2.8	12	30	16	41	22	56	24	7.3		
90	6.2	60	4.1	12	30	16	41	23	58	25	7.6		

For Technical Assistance, Call an EXAIR Application Engineer 1-800-903-9247
Toll Free FAX (866) 329-3924 • E-mail: techelp@exair.com • www.exair.com

EXAIR_Cat36_25_FROMINDESIGN.indb 78 12/20/24 3:46 PM

An INTELLIGENT COMPRESSED AIR® Product

New Equipment Digest KING awards 2011 WINNER

Plant Engineering PRODUCT of the YEAR Finalist 2011

Internal Mix Flat Fan Pattern - 1/4 NPT

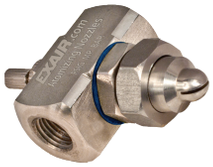

Model: AF1010SS
Material: Type 303 Stainless Steel

Model: AF1020SS
Material: Type 303 Stainless Steel

Model: AF1030SS
Material: Type 303 Stainless Steel

Model: AF1040SS
Material: Type 303 Stainless Steel

Model: AF1050SS
Material: Type 303 Stainless Steel

Model AF1010SS, AF1020SS, AF1030SS, AF1040SS, and AF1050SS

1/4 NPT internal mix flat fan pattern atomizing nozzles are designed with efficiency in mind. Especially good for vertical or horizontal assembly lines, their broad thin pattern makes efficient use of your expensive liquids. Their output can be adjusted for a very light film or a heavy coat of whatever liquid you're working with. Whether it's applying paint to hanging sheet metal, or using a water mist to cool a laminate web, flat fan atomizing nozzles cover a wide flat area, ideal for products moving on a conveyor.

For pressure fed applications not requiring independent air and liquid control.

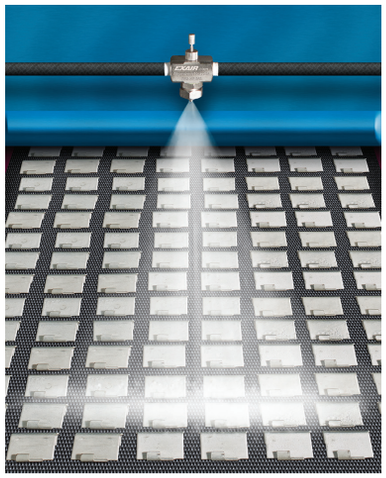

A Model AF1030SS is used to spray an anti-corrosion coating on stamped steel parts as they travel on a conveyor.

Dimensions and Airflow Pattern

DOWNLOAD drawings at EXAIR.com

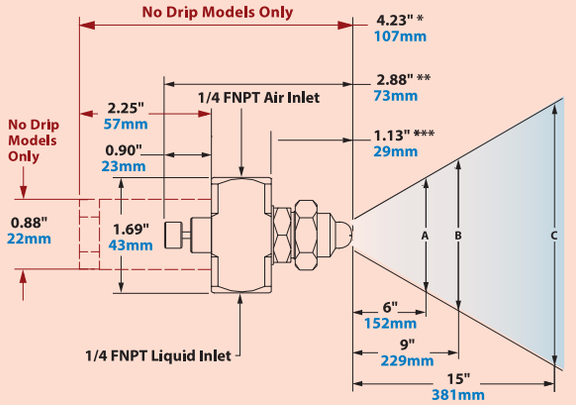

*Model AF2010SS & AF2020SS: 4.10" / 104mm
**Model AF1010SS & AF1020SS: 2.75" / 70mm
***Model AF1010SS & AF1020SS: 1" / 25mm

No Drip Only Dimensions in Red
See page 93 for No Drip Atomizing Nozzles

Model	10 PSI/0.7 BAR Liquid						20 PSI/1.4 BAR Liquid						30 PSI/2.1 BAR Liquid						40 PSI/2.8 BAR Liquid						60 PSI/4.1 BAR Liquid					
	Air Pressure PSI/BAR		GPH/ LPH		SCFM/ SLPM		Air Pressure PSI/BAR		GPH/ LPH		SCFM/ SLPM		Air Pressure PSI/BAR		GPH/ LPH		SCFM/ SLPM		Air Pressure PSI/BAR		GPH/ LPH		SCFM/ SLPM		Air Pressure PSI/BAR		GPH/ LPH		SCFM/ SLPM	
AF1010SS	10	0.7	1.6	6.1	0.7	20	18	1.2	2.1	7.9	1.0	28	28	1.9	2.4	9.1	1.4	40	38	2.6	2.6	9.8	1.7	48	55	3.8	3.2	12.1	2.2	62
	14	1.0	1.4	5.3	0.9	25	26	1.8	1.7	6.4	1.3	37	40	2.8	1.8	6.8	1.8	51	50	3.4	2.0	7.6	2.1	59	75	5.2	2.3	8.7	3.0	85
	18	1.2	1.1	4.2	1.1	31	34	2.3	1.2	4.5	1.7	48	48	3.3	1.4	5.3	2.1	59	60	4.1	1.6	6.1	2.5	71	90	6.2	1.6	6.1	3.6	102
	22	1.5	0.8	3.0	1.3	37	40	2.8	0.8	3.0	1.9	54	55	3.8	1.0	3.8	2.4	68	70	4.8	1.2	4.5	3.0	85	100	6.9	1.3	4.9	4.1	116
AF1020SS	12	0.8	2.4	9.1	0.7	20	20	1.4	3.4	12.9	0.9	25	30	2.1	3.9	14.8	1.2	34	38	2.6	4.6	17.4	1.4	40	65	4.5	4.7	17.8	2.2	62
	16	1.1	1.8	6.8	0.9	25	28	1.9	2.4	9.1	1.2	34	38	2.6	2.9	11.0	1.5	42	50	3.4	3.2	12.1	1.9	54	75	5.2	3.7	14.0	2.6	74
	18	1.2	1.5	5.7	1.0	28	32	2.2	1.8	6.8	1.5	42	46	3.2	2.0	7.6	1.9	54	60	4.1	2.2	8.3	2.3	65	85	5.9	2.8	10.6	3.0	85
	20	1.4	1.3	4.9	1.1	31	36	2.5	1.4	5.3	1.7	48	50	3.4	1.6	6.1	2.1	59	70	4.8	1.4	5.3	2.8	79	95	6.6	2.1	7.9	3.6	102
AF1030SS	16	1.1	4.5	17.0	2.0	57	28	1.9	6.0	22.7	2.8	79	38	2.6	7.0	26.5	3.5	99	46	3.2	8.5	32.2	4.0	113	65	4.5	11.0	41.6	5.3	150
	20	1.4	3.3	12.5	2.4	68	32	2.2	5.0	18.9	3.1	88	42	2.9	6.4	24.2	3.8	108	52	3.6	7.5	28.4	4.5	127	70	4.8	10.0	37.9	5.7	161
	24	1.7	2.4	9.1	2.7	76	34	2.3	4.5	17.0	3.3	93	46	3.2	5.5	20.8	4.1	116	58	4.0	6.3	23.8	4.9	139	80	5.5	8.0	30.3	6.4	181
	28	1.9	1.5	5.7	3.1	88	36	2.5	3.9	14.8	3.5	99	48	3.3	5.1	19.3	4.4	125	60	4.1	6.0	22.7	5.2	147	90	6.2	6.4	24.2	7.2	204
AF1040SS	12	0.8	8.1	30.7	1.4	40	22	1.5	12.0	45.4	1.9	54	34	2.3	13.1	49.6	2.7	76	46	3.2	14.3	54.1	3.4	96	65	4.5	18.3	69.3	4.5	127
	16	1.1	5.9	22.3	1.8	51	30	2.1	7.1	26.9	2.7	76	42	2.9	8.9	33.7	3.4	96	54	3.7	10.3	39.0	4.1	116	80	5.5	11.9	45.0	5.9	167
	18	1.2	5.0	18.9	2.0	57	34	2.3	5.6	21.2	3.1	88	48	3.3	6.3	23.8	4.1	116	60	4.1	7.9	29.9	4.8	136	90	6.2	8.5	32.2	6.8	193
	22	1.5	3.3	12.5	2.4	68	38	2.6	4.1	15.5	3.5	99	52	3.6	5.0	18.9	4.5	127	70	4.8	4.6	17.4	5.8	164	100	6.9	6.0	22.7	7.9	224
AF1050SS	14	1.0	8.8	33.3	3.0	85	26	1.8	11.5	43.5	4.3	122	34	2.3	20.8	78.7	4.6	130	42	2.9	30.0	114	4.8	136	58	4.0	42.0	159	5.5	156
	16	1.1	5.3	20.1	3.7	105	28	1.9	7.8	29.5	4.9	139	36	2.5	17.0	64.3	4.9	139	46	3.2	20.5	77.6	6.1	173	65	4.5	30.0	114	6.8	193
	---	---	---	---	---	---	---	---	---	---	---	---	40	2.8	9.0	34.1	6.1	173	50	3.4	13.5	51.1	7.3	207	70	4.8	21.0	79.5	8.7	246
	---	---	---	---	---	---	---	---	---	---	---	---	42	2.9	6.3	23.8	7.0	198	54	3.7	7.5	28.4	8.4	238	80	5.5	8.5	32.2	11.2	317

Spray Dimensions														
Pressure				Width								Max. Depth feet/m		
Air PSI/ BAR		Liquid PSI/BAR		A		B		C						
				in	cm	in	cm	in	cm					
16	1.1	10	0.7	9	23	12	30	15	38	5	1.5	AF1010SS
30	2.1	20	1.4	11	28	13	33	17	43	6	1.8		
40	2.8	30	2.1	12	30	14	36	20	51	6	1.8		
50	3.4	40	2.8	14	36	16	41	22	56	7	2.1		
85	5.9	60	4.1	14	36	17	43	23	58	7	2.1		
16	1.1	10	0.7	11	28	14	36	19	48	5	1.5	AF1020SS
30	2.1	20	1.4	14	36	17	43	21	53	6	1.8		
42	2.9	30	2.1	14	36	18	46	23	58	6	1.8		
50	3.4	40	2.8	16	41	19	48	26	66	7	2.1		
80	5.5	60	4.1	16	41	21	53	29	74	8	2.4		
20	1.4	10	0.7	11	28	14	36	19	48	10	3.0	AF1030SS
32	2.2	20	1.4	15	38	17	43	23	58	11	3.4		
42	2.9	30	2.1	16	41	21	53	29	74	12	3.7		
54	3.7	40	2.8	19	48	25	64	33	84	14	4.3		
75	5.2	60	4.1	20	51	26	66	35	89	15	4.6		
16	1.1	10	0.7	14	36	18	46	24	61	10	3.0	AF1040SS
32	2.2	20	1.4	15	38	19	48	27	69	12	3.7		
46	3.2	30	2.1	17	43	23	58	30	76	13	4.0		
56	3.9	40	2.8	20	51	25	64	34	86	15	4.6		
85	5.9	60	4.1	21	53	27	69	36	91	15	4.6		
14	1.0	10	0.7	14	36	18	46	23	58	10	3.0	AF1050SS
26	1.8	20	1.4	15	38	19	48	24	61	13	4.0		
38	2.6	30	2.1	16	41	20	51	25	64	16	4.9		
48	3.3	40	2.8	17	43	20	51	27	69	18	5.5		
70	4.8	60	4.1	17	43	21	53	29	74	19	5.8		

EXAIR_Cat36_25_FROMINDESIGN.indb 79 12/20/24 3:46 PM

Air Atomizing Spray Nozzles

Internal Mix Deflected Flat Fan Pattern - 1/4 NPT

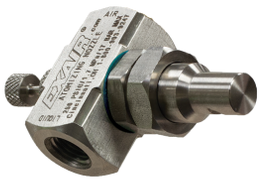

Model: AD1010SS
Material: Type 303 Stainless Steel

Model AD1010SS

1/4 NPT internal mix deflected flat fan nozzles are designed for applications where space is at a premium. The flat fan pattern sprays at a right angle to the nozzle's orientation, allowing spray to be placed precisely where it's needed in close quarters. These nozzles are ideal for coating the inside of enclosures and ductwork.

For pressure fed applications not requiring independent air and liquid control.



A Model AD1010SS is used to apply a protective coating to wood panels.

Dimensions and Airflow Pattern

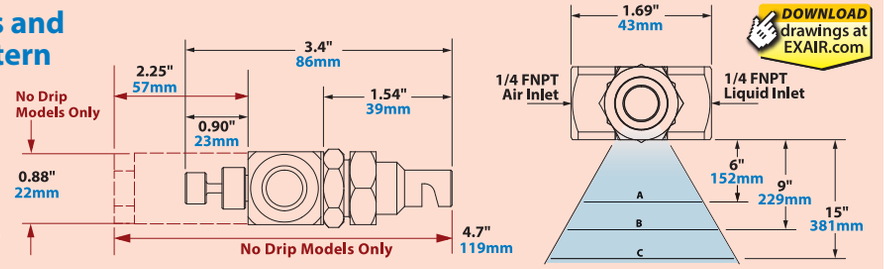

No Drip Dimensions In Red
See page 93 for No Drip Atomizing Nozzles

Model	10 PSI/0.7 BAR Liquid						20 PSI/1.4 BAR Liquid						30 PSI/2.1 BAR Liquid						40 PSI/2.8 BAR Liquid						60 PSI/4.1 BAR Liquid						Spray Dimensions												Model
	Air Pressure PSI/BAR		GPH/LPH		SCFM/SLPM		Air Pressure PSI/BAR		GPH/LPH		SCFM/SLPM		Air Pressure PSI/BAR		GPH/LPH		SCFM/SLPM		Air Pressure PSI/BAR		GPH/LPH		SCFM/SLPM		Air Pressure PSI/BAR		GPH/LPH		SCFM/SLPM		Pressure				Width							
																															Air PSI/BAR		Liquid PSI/BAR		A		B		C		Max. Depth in/cm	
																																			in	cm	in	cm	in	cm		
AD1010SS	6	0.4	3.0	11.5	1.4	41	14	1.0	4.0	15.1	2.3	66	22	1.5	4.6	17.6	3.2	90	26	1.8	5.7	21.4	3.5	98	38	2.6	6.9	26.0	4.7	133	12	0.8	10	0.7	9	23	14	36	16	41	36	91	AD1010SS
	8	0.6	2.7	10.1	1.8	50	18	1.2	3.3	12.4	2.9	82	26	1.8	4.1	15.4	3.7	105	32	2.2	4.9	18.6	4.3	121	54	3.7	5.3	20.1	6.6	188	22	1.5	20	1.4	11	28	13	33	16	41	42	107	
	10	0.7	2.2	8.3	2.1	59	20	1.4	2.9	11.0	3.2	91	30	2.1	3.4	12.9	4.3	122	38	2.6	4.2	15.7	5.1	144	62	4.3	4.6	17.3	7.8	221	34	2.3	30	2.1	8	20	12	30	16	41	45	114	
	12	0.8	1.8	6.9	2.4	69	22	1.5	2.3	8.9	3.6	101	34	2.3	2.8	10.4	5.0	140	46	3.2	2.7	10.3	6.3	180	70	4.8	3.1	11.9	9.1	258	46	3.2	40	2.8	9	23	12	30	15	38	48	122	
																															70	4.8	60	4.1	12	30	15	38	18	46	42	107	

Internal Mix 360° Hollow Circular Pattern - 1/4 NPT

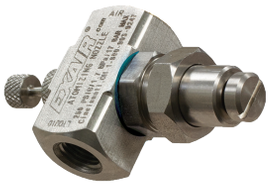

Model: AT1010SS
Material: Type 303 Stainless Steel

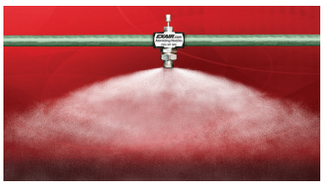

This 360° circular pattern nozzle can be used to coat inside diameters or cover a broad area over 4' (1219mm).

Model AT1010SS

1/4 NPT internal mix 360° nozzles are designed for applications where the spray pattern must be oriented away from the nozzle in all directions. 360° nozzles are ideal where a smooth, even coating is needed on the ID of pipe or similar ductwork. They also work great for operations where a mist over a broad area is needed, such as dust suppression, humidification and cooling.

For pressure fed applications not requiring independent air and liquid control.

Dimensions and Airflow Pattern

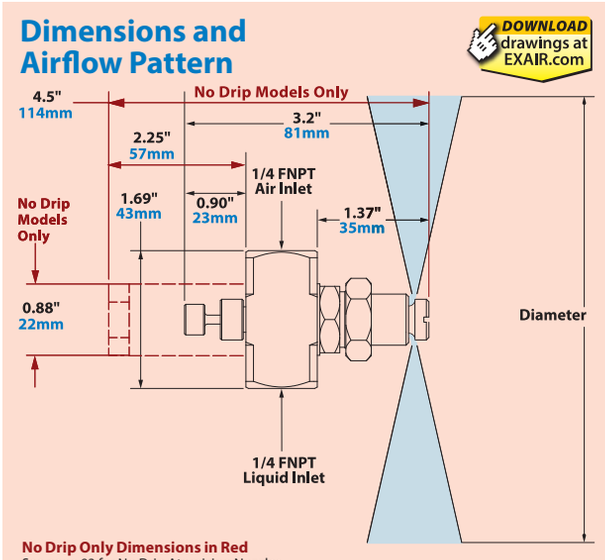

No Drip Only Dimensions in Red
See page 93 for No Drip Atomizing Nozzles

Model	10 PSI/0.7 BAR Liquid						20 PSI/1.4 BAR Liquid						30 PSI/2.1 BAR Liquid						40 PSI/2.8 BAR Liquid						60 PSI/4.1 BAR Liquid						Spray Dimensions						Model
	Air Pressure PSI/BAR		GPH/LPH		SCFM/SLPM		Air Pressure PSI/BAR		GPH/LPH		SCFM/SLPM		Air Pressure PSI/BAR		GPH/LPH		SCFM/SLPM		Air Pressure PSI/BAR		GPH/LPH		SCFM/SLPM		Air Pressure PSI/BAR		GPH/LPH		SCFM/SLPM		Pressure				Diameter		
																															Air PSI/BAR		Liquid PSI/BAR		in	cm	
AT1010SS	20	1.4	4.5	16.8	4.3	121	34	2.3	7.3	27.5	6.4	182	50	3.4	8.1	30.6	8.9	251	60	4.1	11.5	43.5	10.0	283	85	5.9	14.7	55.7	13.3	376	20	1.4	10	0.7	36	91	AT1010SS
	24	1.7	2.6	9.7	5.3	150	38	2.6	5.2	19.6	7.3	206	56	3.9	5.4	20.3	10.0	285	70	4.8	7.1	26.8	11.8	335	90	6.2	12.7	47.9	14.1	398	34	2.3	20	1.4	39	99	
	26	1.8	2.0	7.5	5.7	162	42	2.9	3.6	13.5	8.2	231	60	4.1	4.2	15.7	10.7	303	80	5.5	4.1	15.4	13.5	383	95	6.6	10.6	40.2	14.9	423	50	3.4	30	2.1	44	112	
	28	1.9	1.6	5.9	6.2	176	48	3.3	2.1	7.8	9.3	264	70	4.8	2.0	7.4	12.6	356	90	6.2	2.0	7.7	15.5	439	100	6.9	8.9	33.7	15.8	449	60	4.1	40	2.8	49	124	
																															85	5.9	60	4.1	53	135	

For Technical Assistance, Call an EXAIR Application Engineer 1-800-903-9247
Toll Free FAX (866) 329-3924 • E-mail: techelp@exair.com • www.exair.com

EXAIR_Cat36_25_FROMINDESIGN.indb 80 12/20/24 3:46 PM

An INTELLIGENT COMPRESSED AIR® Product

External Mix Round Pattern - 1/4 NPT



Model: ER1010SS
Material: Type 303 Stainless Steel

Model: ER1020SS
Material: Type 303 Stainless Steel

Model: ER1030SS
Material: Type 303 Stainless Steel

Model: ER1040SS
Material: Type 303 Stainless Steel

Model: ER1050SS
Material: Type 303 Stainless Steel

Model ER1010SS, ER1020SS, ER1030SS, ER1040SS and ER1050SS

1/4 NPT external mix round pattern nozzles are great where a high volume of liquid is needed over a specific area or general area, but not in a flat pattern. Applications include spot treatments of parts, covering irregularly shaped objects or covering a container of parts with a heavy coat. They are also an excellent choice for controlling heavy dust and particulates. Since they are external mix, airflow and liquid flow can be controlled independently.

For pressure fed applications with independent air and liquid control.



(2) Model ER1020SS atomizing nozzles are used to apply a fire retardant coating to wood trim.

Dimensions and Airflow Pattern

DOWNLOAD drawings at EXAIR.com

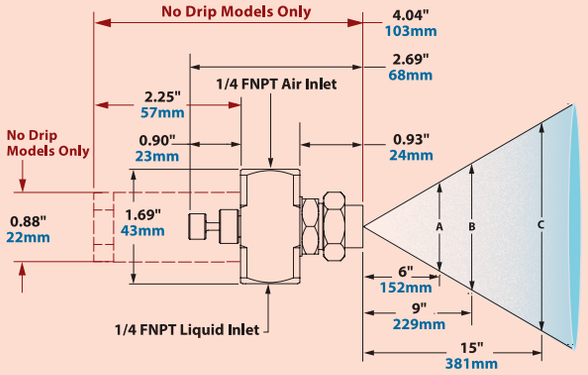

No Drip Only Dimensions in Red
See page 93 for No Drip Atomizing Nozzles

Model	3 PSI/0.2 BAR Liquid						5 PSI/0.3 BAR Liquid						10 PSI/0.7 BAR Liquid						20 PSI/1.4 BAR Liquid						40 PSI/2.8 BAR Liquid					
	Air Pressure PSI/BAR		GPH/LPH		SCFM/SLPM		Air Pressure PSI/BAR		GPH/LPH		SCFM/SLPM		Air Pressure PSI/BAR		GPH/LPH		SCFM/SLPM		Air Pressure PSI/BAR		GPH/LPH		SCFM/SLPM		Air Pressure PSI/BAR		GPH/LPH		SCFM/SLPM	
ER1010SS	5	0.3	1.0	3.8	0.9	25.5	5	0.3	1.4	5.3	0.9	25.5	10	0.7	1.9	7.2	1.3	36.8	20	1.4	2.7	10.2	1.9	53.8	20	1.4	3.8	14.4	1.9	53.8
	10	0.7			1.3	36.8	10	0.7			1.3	36.8	20	1.4			1.9	53.8	40	2.8			3.0	85.0	40	2.8			3.0	85.0
	20	1.4			1.9	53.8	30	2.1			2.4	68.0	40	2.8			3.0	85.0	60	4.1			4.1	116	60	4.1			4.1	116
	40	2.8			3.0	85.0	50	3.4			3.5	99.1	60	4.1			4.1	116	90	6.2			5.7	161	90	6.2			5.7	161
ER1020SS	6	0.4	2.5	9.5	0.9	25.5	10	0.7	3.2	12.1	1.3	36.8	10	0.7	4.3	16.3	1.3	36.8	20	1.4	5.9	22.3	2.9	82.1	40	2.8	7.5	28.4	3.0	85.0
	10	0.7			1.3	36.8	20	1.4			1.8	51.0	20	1.4			1.9	53.8	40	2.8			3.1	87.8	60	4.1			4.1	116
	30	2.1			2.4	68.0	40	2.8			3.1	87.8	40	2.8			3.1	87.8	60	4.1			4.1	116	80	5.5			5.3	150
	50	3.4			3.6	102	60	4.1			4.1	116	60	4.1			4.1	116	90	6.2			5.9	167	90	6.2			5.9	167
ER1030SS	10	0.7	4.4	16.7	4.0	113	10	0.7	5.5	20.8	4.0	113	15	1.0	7.6	28.8	4.9	139	30	2.1	11.0	41.6	7.7	218	40	2.8	14.0	53.0	9.5	269
	20	1.4			6.0	170	20	1.4			6.0	170	30	2.1			7.7	218	40	2.8			9.5	269	50	3.4			11.2	317
	40	2.8			9.5	269	40	2.8			9.5	269	50	3.4			11.2	317	60	4.1			11.7	331	60	4.1			11.7	331
	50	3.4			11.2	317	60	4.1			11.7	331	70	4.8			13.4	379	80	5.5			15.3	433	80	5.5			15.3	433
ER1040SS	15	1.0	10.0	37.9	4.9	139	20	1.4	13.5	51.1	6.0	170	30	2.1	18.8	71.2	7.7	218	40	2.8	27.6	104	9.5	269	50	3.4	31.0	117	11.2	317
	30	2.1			7.7	218	30	2.1			7.7	218	40	2.8			9.5	269	50	3.4			11.2	317	60	4.1			11.7	331
	40	2.8			9.5	269	40	2.8			9.5	269	60	4.1			11.7	331	60	4.1			11.7	331	70	4.8			13.4	379
	50	3.4			11.2	317	60	4.1			11.7	331	80	5.5			15.3	433	80	5.5			15.3	433	80	5.5			15.3	433
ER1050SS	40	2.8	18.0	68.1	14.0	396	55	3.8	26.0	98.0	18.0	510	65	4.5	41.0	155	21.0	595	80	5.5	60.0	227	25.3	716	–	–			–	–
	50	3.4			16.8	470	65	4.5			21.0	595	70	4.8			22.3	631	90	6.2			27.9	790	–	–			–	–
	60	4.1			19.7	558	70	4.8			22.3	631	80	5.5			25.3	716	–	–			–	–	–	–			–	–
	65	4.5			21.0	595	80	5.5			25.3	716	90	6.2			27.9	790	–	–			–	–	–	–			–	–

Note: When air pressure is 10× or more than liquid pressure, liquid flow may diminish.

Spray Dimensions													
Pressure				Width								Max. Depth feet/m	
Air PSI/BAR		Liquid PSI/BAR		A		B		C					
				in	cm	in	cm	in	cm				
10	0.7	3	0.2	3.0	7.6	4.3	10.9	6.3	16.0	9	2.7	ER1010SS	
20	1.4	5	0.3	3.3	8.4	4.5	11.4	6.8	17.3	11	3.4		
40	2.8	10	0.7	3.5	8.9	5.3	13.5	7.5	19.1	13	4.0		
40	2.8	20	1.4	3.5	8.9	5.0	12.7	7.0	17.8	14	4.3		
60	4.1	40	2.8	4.0	10.2	5.5	14.0	8.0	20.3	15	4.6		
10	0.7	3	0.2	3.8	9.7	5.0	12.7	7.5	19.1	10	3.0	ER1020SS	
20	1.4	5	0.3	4.0	10.2	5.8	14.7	7.0	17.8	12	3.7		
40	2.8	10	0.7	4.3	10.9	6.0	15.2	8.3	21.1	15	4.6		
40	2.8	20	1.4	4.5	11.4	6.0	15.2	8.3	21.1	15	4.6		
60	4.1	40	2.8	5.0	12.7	6.5	16.5	8.5	21.6	16	4.9		
10	0.7	3	0.2	4.3	10.9	6.0	15.2	8.8	22.4	13	4.0	ER1030SS	
40	2.8	5	0.3	4.5	11.4	6.5	16.5	8.5	21.6	23	7.0		
40	2.8	10	0.7	4.8	12.2	6.8	17.3	9.0	22.9	24	7.3		
60	4.1	20	1.4	4.5	11.4	6.8	17.3	9.0	22.9	29	8.8		
60	4.1	40	2.8	5.3	13.5	7.0	17.8	9.3	23.6	30	9.1		
20	1.4	3	0.2	5.8	14.7	7.5	19.1	10.0	25.4	15	4.6	ER1040SS	
40	2.8	5	0.3	6.0	15.2	8.0	20.3	10.3	26.2	19	5.8		
60	4.1	10	0.7	6.0	15.2	8.0	20.3	10.5	26.7	23	7.0		
60	4.1	20	1.4	5.5	14.0	7.0	17.8	9.0	22.9	24	7.3		
80	5.5	40	2.8	4.5	11.4	6.5	16.5	9.5	24.1	30	9.1		
40	2.8	3	0.2	6.5	16.5	8.8	22.4	11.0	27.9	23	7.0	ER1050SS	
70	4.8	5	0.3	6.5	16.5	9.0	22.9	10.0	25.4	28	8.5		
80	5.5	10	0.7	6.5	16.5	9.0	22.9	11.0	27.9	30	9.1		
90	6.2	20	1.4	6.0	15.2	8.0	20.3	11.0	27.9	32	9.8		

EXAIR_Cat36_25_FROMINDESIGN.indb 81 12/20/24 3:46 PM

Air Atomizing Spray Nozzles

External Mix Narrow Angle Flat Fan Pattern - 1/4 NPT



Model: EF1010SS
Material: Type 303 Stainless Steel

Model: EF1020SS
Material: Type 303 Stainless Steel

Model: EF1030SS
Material: Type 303 Stainless Steel

Model: EF1040SS
Material: Type 303 Stainless Steel

Model EF1010SS, EF1020SS, EF1030SS and EF1040SS

1/4 NPT external mix narrow angle flat fan pattern nozzles are great where a high volume of liquid is needed over a concentrated area. Since they are external mix, airflow and liquid flow can be controlled independently. External mix narrow angle flat fan pattern nozzles are the best choice where thicker liquids for a heavy coating are needed over a narrow band, such as a paint line.

For pressure fed applications with independent air and liquid control.



A Model EF1020SS is used to supply humidification for a corrosion test chamber.

Dimensions and Airflow Pattern

DOWNLOAD drawings at EXAIR.com

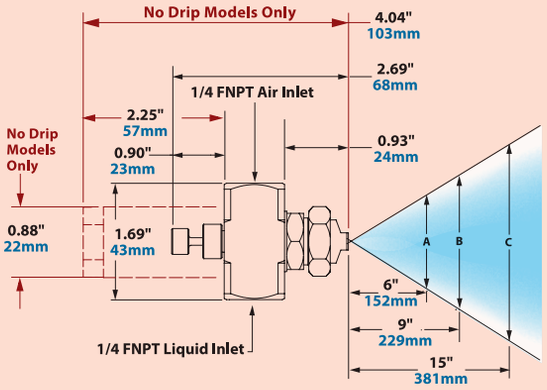

No Drip Only Dimensions in Red
See page 93 for No Drip Atomizing Nozzles

Model	3 PSI/0.2 BAR Liquid						5 PSI/0.3 BAR Liquid						10 PSI/0.7 BAR Liquid						20 PSI/1.4 BAR Liquid						40 PSI/2.8 BAR Liquid						Spray Dimensions												
	Air Pressure PSI/ BAR		GPH/ LPH		SCFM/ SLPM		Air Pressure PSI/ BAR		GPH/ LPH		SCFM/ SLPM		Air Pressure PSI/ BAR		GPH/ LPH		SCFM/ SLPM		Air Pressure PSI/ BAR		GPH/ LPH		SCFM/ SLPM		Air Pressure PSI/ BAR		GPH/ LPH		SCFM/ SLPM		Pressure: Air PSI/ BAR		Pressure: Liquid PSI/ BAR		Width: A in	Width: A cm	Width: B in	Width: B cm	Width: C in	Width: C cm	Max. Depth feet/m		Model
EF1010SS	5	0.3	1.0	3.8	0.8	22.7	10	0.7	1.4	5.3	1.0	28.3	15	1.0	1.9	7.2	1.3	36.8	25	1.7	2.7	10.2	1.8	51.0	45	3.1	3.8	14.4	2.7	76.5	5	0.3	3	0.2	4.0	10.2	5.8	14.7	9.5	24.1	6	1.8	EF1010SS
	10	0.7			1.0	28.3	20	1.4			1.5	42.5	25	1.7			1.8	51.0	40	2.8			2.5	70.8	60	4.1			3.4	96.3	25	1.7	5	0.3	5.5	14.0	8.0	20.3	10.0	25.4	12	3.7	
	20	1.4			1.5	42.5	30	2.1			2.0	56.6	40	2.8			2.5	70.8	60	4.1			3.4	96.3	75	5.2			4.1	116	25	1.7	20	1.4	6.5	16.5	9.5	24.1	13.0	33.0	13	4.0	
	40	2.8			2.5	70.8	50	3.4			2.9	82.1	60	4.1			3.4	96.3	90	6.2			4.7	133	95	6.5			5.1	144	50	3.4	20	1.4	6.3	16.0	9.3	23.6	12.0	30.5	16	4.9	
																															75	5.2	40	2.8	6.5	16.5	9.5	24.1	13.0	33.0	18	5.5	
EF1020SS	10	0.7	2.5	9.5	1.0	28.3	15	1.0	3.2	12.1	1.3	36.8	20	1.4	4.3	16.3	1.5	42.5	35	2.4	5.9	22.3	2.2	62.3	50	3.4	7.5	28.4	2.9	82.1	10	0.7	3	0.2	4.5	11.4	7.0	17.8	11.0	27.9	9	2.7	EF1020SS
	20	1.4			1.5	42.5	25	1.7			1.8	51.0	30	2.1			2.0	56.6	50	3.4			2.9	82.1	60	4.1			3.4	96.3	30	2.1	5	0.3	6.0	15.2	10.0	25.4	14.0	35.6	14	4.3	
	30	2.1			2.0	56.6	40	2.8			2.5	70.8	50	3.4			2.9	82.1	70	4.8			3.8	108	80	5.5			4.3	122	35	2.4	20	1.4	6.5	16.5	11.0	27.9	16.0	40.6	17	5.2	
	50	3.4			2.9	82.1	60	4.1			3.4	96.3	70	4.8			3.8	108	90	6.2			4.7	133	100	6.9			5.2	147	60	4.1	20	1.4	7.5	19.1	11.5	29.2	18.0	45.7	20	6.1	
																															75	5.2	40	2.8	7.5	19.1	12.0	30.5	17.0	43.2	22	6.7	
EF1030SS	10	0.7	4.4	16.7	3.5	99.1	20	1.4	5.5	20.8	5.3	150	25	1.7	7.6	28.8	6.1	173	40	2.8	11.0	41.6	8.4	238	50	3.4	14.0	53.0	10.0	283	10	0.7	3	0.2	6.0	15.2	9.0	22.9	12.0	30.5	12	3.7	EF1030SS
	20	1.4			5.3	150	30	2.1			6.9	195	35	2.4			7.6	215	50	3.4			10.0	283	60	4.1			11.5	326	35	2.4	5	0.3	6.8	17.3	9.0	22.9	12.0	30.5	20	6.1	
	30	2.1			6.9	195	40	2.8			8.4	238	50	3.4			10.0	283	70	4.8			12.7	360	80	5.5			13.7	388	40	2.8	10	0.7	7.0	17.8	10.0	25.4	13.0	33.0	23	7.0	
	50	3.4			10.0	283	60	4.1			11.5	326	70	4.8			12.7	360	90	6.2			14.8	419	95	6.5			15.1	428	60	4.1	20	1.4	7.0	17.8	11.0	27.9	14.0	35.6	28	8.5	
																															75	5.2	40	2.8	7.0	17.8	11.0	27.9	14.0	35.6	30	9.1	
EF1040SS	15	1.0	10.0	37.9	4.4	125	25	1.7	13.5	51.1	6.1	173	35	2.4	18.8	71.2	7.6	215	45	3.1	27.6	104	9.2	261	55	3.8	31.0	117	10.7	303	15	1.0	3	0.2	6.0	15.2	10.0	25.4	14.0	35.6	13	4.0	EF1040SS
	25	1.7			6.1	173	35	2.4			7.6	215	45	3.1			9.2	261	55	3.8			10.7	303	65	4.5			12.2	345	30	2.1	3	0.2	6.8	17.3	11.0	27.9	14.0	35.6	17	5.2	
	40	2.8			8.4	238	50	3.4			10.0	283	60	4.1			11.5	326	70	4.8			12.7	360	80	5.5			13.7	388	50	3.4	10	0.7	7.5	19.1	12.0	30.5	15.0	38.1	22	6.7	
	50	3.4			10.0	283	60	4.1			11.5	326	80	5.5			13.7	388	90	6.2			14.8	419	100	6.9			16.2	459	60	4.1	20	1.4	8.0	20.3	12.0	30.5	16.0	40.6	25	7.6	
																															80	5.5	40	2.8	7.0	17.8	11.0	27.9	15.0	38.1	27	8.2	

EXAIR_Cat36_25_FROMINDESIGN.indb 82 12/20/24 3:46 PM

An INTELLIGENT COMPRESSED AIR® Product

External Mix Wide Angle Flat Fan Pattern - 1/4 NPT



Model: EB1010SS
Material: Type 303 Stainless Steel

Model: EB1020SS
Material: Type 303 Stainless Steel

Model: EB1030SS
Material: Type 303 Stainless Steel

Model: EB1040SS
Material: Type 303 Stainless Steel

Model EB1010SS, EB1020SS, EB1030SS and EB1040SS

1/4 NPT external mix wide angle flat fan pattern nozzles are great where a high volume of liquid is needed over a wide area such as a conveyor line. Because they are external mix, airflow and liquid flow can be controlled independently. Common applications are those which require a moderate application of liquid over a broad area, such as cooling or coating wide webs.

For pressure fed applications with independent air and liquid control.



(2) Model EB1040SS nozzles are used to rinse wine bottles after capping.

Dimensions and Airflow Pattern

DOWNLOAD drawings at EXAIR.com

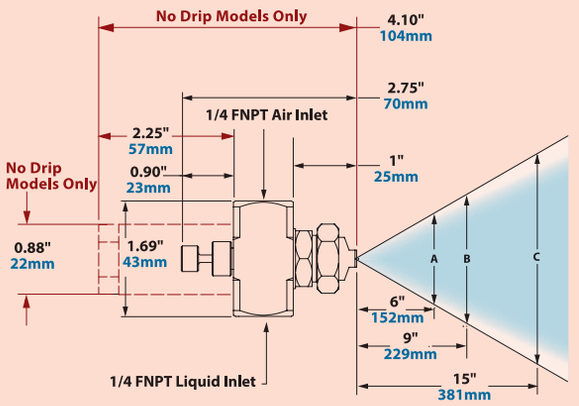

No Drip Only Dimensions in Red
See page 93 for No Drip Atomizing Nozzles

Model	3 PSI/0.2 BAR Liquid						5 PSI/0.3 BAR Liquid						10 PSI/0.7 BAR Liquid						20 PSI/1.4 BAR Liquid						40 PSI/2.8 BAR Liquid						Spray Dimensions												Model
	Air Pressure PSI/ BAR		GPH/ LPH		SCFM/ SLPM		Air Pressure PSI/ BAR		GPH/ LPH		SCFM/ SLPM		Air Pressure PSI/ BAR		GPH/ LPH		SCFM/ SLPM		Air Pressure PSI/ BAR		GPH/ LPH		SCFM/ SLPM		Air Pressure PSI/ BAR		GPH/ LPH		SCFM/ SLPM		Pressure		Width						Max. Depth feet/m		
																															Air PSI/ BAR	Liquid PSI/ BAR	A		B		C				
																																	in	cm	in	cm	in	cm			
EB1010SS	5	0.3	1.0	3.8	0.9	25.5	5	0.3	1.4	5.3	0.9	25.5	8	0.6	1.9	7.2	1.1	31.1	10	0.7	2.7	10.2	1.3	36.8	15	1.0	3.8	14.4	1.7	48.1	10	0.7	5	0.3	8.0	20.3	11.0	27.9	14.0	35.6	9	2.7	EB1010SS
	8	0.6			1.1	31.1	10	0.7			1.3	36.8	10	0.7			1.3	36.8	20	1.4			2.0	56.6	20	1.4			2.0	56.6	15	1.0	10	0.7	9.0	22.9	12.0	30.5	17.0	43.2	11	3.4	
	10	0.7			1.3	36.8	15	1.0			1.7	48.1	20	1.4			2.0	56.6	30	2.1			2.6	73.6	30	2.1			2.6	73.6	20	1.4	20	1.4	9.3	23.6	14.0	35.6	19.0	48.3	11	3.4	
	15	1.0			1.7	48.1	20	1.4			2.0	56.6	30	2.1			2.6	73.6	35	2.4			3.0	85.0	35	2.4			3.0	85.0	25	1.7	30	2.1	11.0	27.9	15.0	38.1	20.0	50.8	13	4.0	
																															25	1.7	40	2.8	11.0	27.9	15.0	38.1	21.0	53.3	14	4.3	
EB1020SS	6	0.4	2.5	9.5	1.0	28.3	6	0.4	3.2	12.1	1.0	28.3	6	0.4	4.3	16.3	1.0	28.3	10	0.7	5.9	22.3	1.3	36.8	20	1.4	7.5	28.4	2.0	56.6	8	0.6	5	0.3	11.0	27.9	16.0	40.6	19.0	48.3	8	2.4	EB1020SS
	7	0.5			1.1	31.1	8	0.6			1.1	31.1	8	0.6			1.1	31.1	12	0.8			1.5	42.5	25	1.7			2.3	65.1	15	1.0	20	1.4	11.0	27.9	16.0	40.6	21.0	53.3	11	3.4	
	8	0.6			1.1	31.1	9	0.6			1.2	34.0	10	0.7			1.3	36.8	15	1.0			1.7	48.1	30	2.1			2.6	74.0	20	1.4	20	1.4	12.0	30.5	17.0	43.2	22.0	55.9	12	3.7	
	10	0.7			1.3	36.8	10	0.7			1.3	36.8	12	0.8			1.5	42.5	20	1.4			2.0	56.6	35	2.4			3.0	85.0	25	1.7	30	2.1	13.0	33.0	18.0	45.7	24.0	61.0	12	3.7	
																															30	2.1	40	2.8	13.0	33.0	19.0	48.3	24.0	61.0	14	4.3	
EB1030SS	8	0.6	4.4	16.7	3.4	96.3	10	0.7	5.5	20.8	3.8	108	15	1.0	7.6	28.8	4.8	136	35	2.4	11.0	41.6	8.4	238	50	3.4	14.0	53.0	11.0	311	15	1.0	3	0.2	11.0	27.9	17.0	43.2	21.0	53.3	13	4.0	EB1030SS
	15	1.0			4.8	136	20	1.4			5.9	167	25	1.7			6.7	190	45	3.1			10.1	286	65	4.5			12.3	348	25	1.7	10	0.7	12.0	30.5	18.0	45.7	23.0	58.4	16	4.9	
	20	1.4			5.9	167	25	1.7			6.7	190	35	2.4			8.4	238	55	3.8			11.7	331	85	5.9			15.7	445	45	3.1	20	1.4	13.0	33.0	19.0	48.3	24.0	61.0	21	6.4	
	25	1.7			6.7	190	30	2.1			7.6	215	40	2.8			9.3	263	60	4.1			12.0	340	95	6.5			16.8	476	60	4.1	30	2.1	14.0	35.6	18.0	45.7	24.0	61.0	26	7.9	
																															70	4.8	40	2.8	14.0	35.6	18.0	45.7	24.0	61.0	30	9.1	
EB1040SS	10	0.7	10.0	37.9	3.8	108	15	1.0	13.5	51.1	4.8	136	25	1.7	18.8	71.2	6.7	190	45	3.1	27.6	104	10.1	286	75	5.2	31.0	117	13.7	388	30	2.1	5	0.3	13.0	33.0	19.0	48.3	24.0	61.0	17	5.2	EB1040SS
	15	1.0			4.8	136	20	1.4			5.9	167	30	2.1			7.6	215	50	3.4			11.0	311	85	5.9			15.7	445	45	3.1	20	1.4	14.0	35.6	20.0	50.8	26.0	66.0	19	5.8	
	20	1.4			5.9	167	30	2.1			7.6	215	40	2.8			9.3	263	70	4.8			13.4	379	95	6.5			16.8	476	65	4.5	20	1.4	15.0	38.1	21.0	53.3	27.0	68.6	23	7.0	
	25	1.7			6.7	190	35	2.4			8.4	238	45	3.1			10.1	286	80	5.5			14.8	419	100	6.9			18.3	518	80	5.5	20	1.4	15.0	38.1	22.0	55.9	28.0	71.1	26	7.9	
																															90	6.2	40	2.8	16.0	40.6	22.0	55.9	28.0	71.1	26	7.9	

EXAIR_Cat36_25_FROMINDESIGN.indb 83 12/20/24 3:46 PM

Air Atomizing Spray Nozzles

Siphon Fed Round Pattern - 1/4 NPT

KING awards 2011 WINNER

Plant Engineering PRODUCT of the YEAR Finalist 2011



Model: SR1010SS
Material: Type 303 Stainless Steel

Model: SR1020SS
Material: Type 303 Stainless Steel

Model: SR1030SS
Material: Type 303 Stainless Steel

Model: SR1040SS
Material: Type 303 Stainless Steel

Model SR1010SS, SR1020SS, SR1030SS and SR1040SS

1/4 NPT siphon fed round pattern nozzles are great where no liquid pressure is available and a thin coating is needed at a specific area. Flow rate is adjustable via the adjusting valve. Siphon nozzles work best with a suction height of 36" (914mm) or less. Since these nozzles are siphon fed, the compressed airflow draws the liquid in and mixes it internally. Liquid flow is dependent both on the gravity or suction height and the airflow. Siphon fed round pattern nozzles provide the most liquid flow of any siphon fed nozzle.

Siphon or gravity fed for non-pressurized applications.



The SR1020SS has a focused, round pattern for precision application of coatings or coolant.

Dimensions and Airflow Pattern

DOWNLOAD drawings at EXAIR.com

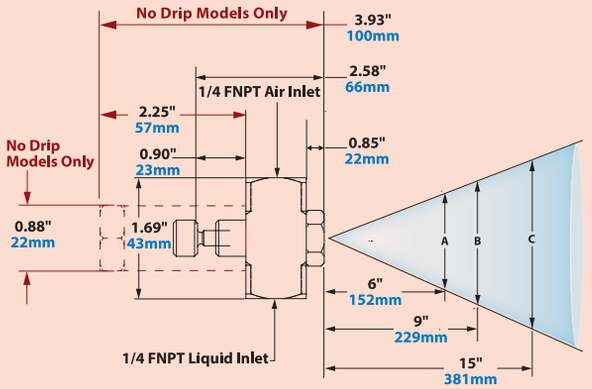

No Drip Only Dimensions in Red
See page 93 for No Drip Atomizing Nozzles

Liquid Flow in GPH/LPH																							Spray Dimensions at 8" (20cm) Siphon Height										
Model	Air				Gravity Head						Siphon Height										Air		Width						Max. Depth		Model
	Pressure PSI/BAR		SCFM/ SLPM		18"	46cm	12"	30cm	6"	15cm	4"	10cm	8"	20cm	12"	30cm	24"	61cm	36"	91cm	Pressure PSI/BAR		A in	A cm	B in	B cm	C in	C cm	feet/m		
SR1010SS	10	0.7	0.5	14.2	0.6	2.3	0.5	1.9	0.4	1.5	0.2	0.8	0.2	0.8	---	---	---	---	---	---	10	0.7	2.5	6	4.0	10	5.8	15	7	2.1	SR1010SS
	20	1.4	0.7	19.8	0.6	2.3	0.6	2.3	0.5	1.9	0.4	1.5	0.4	1.5	0.3	1.1	---	---	---	---	20	1.4	3.3	8	4.3	11	6.0	15	9	2.7	
	40	2.8	1.2	34.0	0.7	2.6	0.7	2.6	0.6	2.3	0.5	1.9	0.5	1.9	0.4	1.5	0.3	1.1	0.2	0.8	40	2.8	3.8	10	5.0	13	6.8	17	10	3.0	
	60	4.1	1.6	45.3	0.8	3.0	0.8	3.0	0.7	2.6	0.6	2.3	0.5	1.9	0.5	1.9	0.4	1.5	0.2	0.8	60	4.1	3.8	10	5.0	13	6.8	17	11	3.4	
SR1010SS	10	0.7	0.7	19.8	1.1	4.2	0.9	3.4	0.8	3.0	0.5	1.9	0.4	1.5	0.3	1.1	---	---	---	---	10	0.7	3.3	8	4.8	12	6.8	17	9	2.7	SR1020SS
	20	1.4	1.1	31.1	1.3	4.9	1.1	4.2	1.0	3.8	0.8	3.0	0.7	2.6	0.6	2.3	0.3	1.1	---	---	20	1.4	3.5	9	5.0	13	7.0	18	11	3.4	
	40	2.8	1.7	48.1	1.6	6.1	1.5	5.7	1.4	5.3	1.2	4.5	1.0	3.8	1.0	3.8	0.7	2.6	0.4	1.5	40	2.8	3.8	10	5.5	14	7.5	19	14	4.3	
	60	4.1	2.3	65.0	1.9	7.2	1.7	6.4	1.6	6.1	1.4	5.3	1.2	4.5	1.2	4.5	0.9	3.4	0.5	1.9	60	4.1	4.0	10	5.8	15	8.0	20	16	4.9	
SR1030SS	20	1.4	2.0	56.6	4.3	16.3	3.8	14.4	3.3	12.5	2.5	9.5	1.8	6.8	1.3	4.9	0.3	1.1	---	---	20	1.4	3.5	9	5.0	13	7.0	18	12	3.7	SR1030SS
	40	2.8	3.2	90.6	5.0	18.9	4.4	16.7	4.0	15.1	3.3	12.5	2.9	11.0	2.5	9.5	1.3	4.9	1.0	3.8	40	2.8	3.8	10	5.3	13	7.5	19	13	4.0	
	60	4.1	4.3	122	5.5	20.8	4.9	18.5	4.5	17.0	3.7	14.0	3.4	12.9	3.1	11.7	1.9	7.2	1.5	5.7	60	4.1	3.8	10	5.5	14	8.0	20	15	4.6	
	80	5.5	5.6	158	5.8	22.0	5.3	20.1	4.9	18.5	4.1	15.5	3.9	14.8	3.7	14.0	2.6	9.8	1.7	6.4	80	5.5	4.0	10	5.8	15	8.3	21	18	5.5	
SR1040SS	30	2.1	5.7	161	12.3	46.6	11.0	41.6	9.3	35.2	6.3	23.8	5.3	20.1	4.5	17.0	0.6	2.3	---	---	30	2.1	4.8	12	6.5	17	8.8	22	19	5.8	SR1040SS
	40	2.8	6.9	195	13.0	49.2	11.8	44.7	10.0	37.9	7.3	27.6	6.5	24.6	5.5	20.8	1.5	5.7	0.3	1.1	40	2.8	5.2	13	7.0	18	9.3	24	21	6.4	
	60	4.1	9.5	269	14.3	54.1	13.0	49.2	11.5	43.5	8.5	32.2	7.5	28.4	6.5	24.6	2.3	8.7	1.5	5.7	60	4.1	5.5	14	7.5	19	9.8	25	24	7.3	
	80	5.5	12.0	340	15.0	56.8	13.5	51.1	12.5	47.3	9.5	36.0	8.5	32.2	7.5	28.4	3.5	13.2	1.9	7.2	80	5.5	5.8	15	7.8	20	10.0	25	27	8.2	

For Technical Assistance, Call an EXAIR Application Engineer 1-800-903-9247
Toll Free FAX (866) 329-3924 • E-mail: techelp@exair.com • www.exair.com

EXAIR_Cat36_25_FROMINDESIGN.indb 84 12/20/24 3:46 PM

An INTELLIGENT COMPRESSED AIR® Product

KING awards 2011 WINNER

Plant Engineering PRODUCT of the YEAR Finalist 2011

Siphon Fed Flat Fan Pattern - 1/4 NPT



Model: SF1010SS
Material: Type 303 Stainless Steel

Model: SF1020SS
Material: Type 303 Stainless Steel

Model: SF1030SS
Material: Type 303 Stainless Steel

Model SF1010SS, SF1020SS and SF1030SS

1/4 NPT siphon fed flat fan pattern nozzles are great where no liquid pressure is available and a thin coating is needed over a wide band. Flow rate is adjustable via the adjusting valve. Siphon nozzles work best with a suction height of 36" (914mm) or less. Since these nozzles are siphon fed, the compressed airflow draws the liquid in and mixes it internally. Liquid flow is dependent both on the gravity or suction height and the airflow. Siphon fed flat fan pattern nozzles are the best choice where liquid is needed over a broad band such as a moving assembly line.

Siphon or gravity fed for non-pressurized applications.

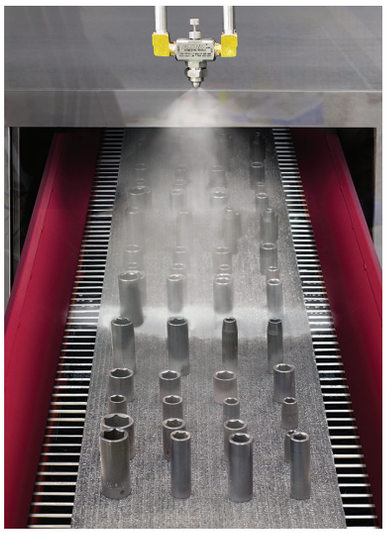

A Model SF1020SS is used to apply a light coating of oil to prevent sockets from rusting prior to a packaging operation.

Dimensions and Airflow Pattern

DOWNLOAD drawings at EXAIR.com

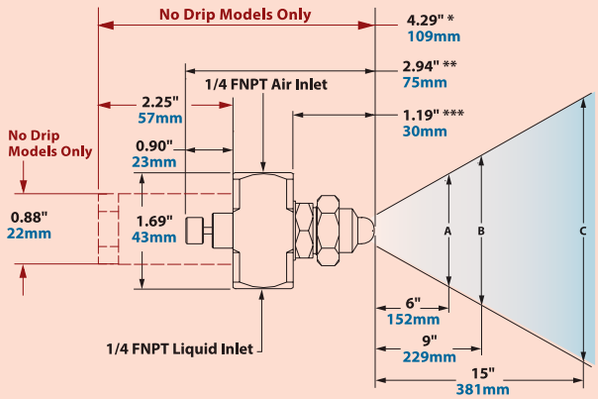

*Model SF2010SS: 4.15" / 105mm
**Model SF1010SS: 2.80" / 71mm
***Model SF1010SS: 1.05" / 27mm

No Drip Only Dimensions in Red
See page 93 for No Drip Atomizing Nozzles

Liquid Flow in GPH/LPH

Model	Air				Gravity Head						Siphon Height									
	Pressure PSI/BAR		SCFM/ SLPM		18"	46cm	12"	30cm	6"	15cm	4"	10cm	8"	20cm	12"	30cm	24"	61cm	36"	91cm
SF1010SS	10	0.7	0.9	25.5	0.4	1.5	0.3	1.1	0.3	1.1	0.2	0.8	0.2	0.8	0.2	0.8	0.2	0.8	0.1	0.4
	20	1.4	1.3	36.8	0.4	1.5	0.3	1.1	0.3	1.1	0.3	1.1	0.3	1.1	0.3	1.1	0.2	0.8	0.2	0.8
	30	2.1	1.7	48.1	0.3	1.1	0.3	1.1	0.3	1.1	0.3	1.1	0.3	1.1	---	---	---	---	---	---
SF1020SS	20	1.4	2.3	65.1	1.2	4.5	1.1	4.2	1.0	3.8	0.9	3.4	0.8	3.0	0.8	3.0	0.6	2.3	0.5	1.9
	30	2.1	2.9	82.1	1.1	4.2	1.1	4.2	1.0	3.8	0.8	3.0	0.8	3.0	0.8	3.0	0.6	2.3	0.5	1.9
	40	2.8	3.5	99.1	1.0	3.8	0.9	3.4	0.8	3.0	0.7	2.6	0.7	2.6	0.7	2.6	0.5	1.9	0.4	1.5
	50	3.4	4.3	122	0.8	3.0	0.7	2.6	0.5	1.9	0.5	1.9	0.4	1.5	0.3	1.1	---	---	---	---
SF1030SS	20	1.4	2.2	62.3	1.8	6.8	1.6	6.1	1.5	5.7	1.4	5.3	1.4	5.3	1.3	4.9	1.1	4.2	1.0	3.8
	30	2.1	2.8	79.2	1.9	7.2	1.8	6.8	1.8	6.8	1.7	6.4	1.7	6.4	1.6	6.1	1.4	5.3	1.2	4.5
	40	2.8	3.3	93.4	1.8	6.8	1.8	6.8	1.7	6.4	1.6	6.1	1.6	6.1	1.5	5.7	1.3	4.9	1.2	4.5
	50	3.4	4.0	113	1.6	6.1	1.5	5.7	1.4	5.3	1.4	5.3	1.3	4.9	1.3	4.9	1.1	4.2	1.0	3.8

Spray Dimensions at 8" (20cm) Siphon Height

Air		Width						Max. Depth		Model
		A		B		C				
Pressure PSI/BAR		in	cm	in	cm	in	cm	feet/m		
10	0.7	9	23	11	28	13	33	5	1.5	SF1010SS
20	1.4	10	25	12	30	14	36	6	1.8	
30	2.1	11	28	13	33	15	38	7	2.1	
20	1.4	10	25	14	36	19	48	6	1.8	SF1020SS
30	2.1	11	28	15	38	21	53	7	2.1	
40	2.8	13	33	16	41	23	58	6	1.8	
50	3.4	14	36	18	46	25	64	6	1.8	
20	1.4	9	23	11	28	15	38	8	2.4	SF1030SS
30	2.1	10	25	13	33	17	43	9	2.7	
40	2.8	11	28	14	36	17	43	10	3.0	
50	3.4	11	28	14	36	18	46	11	3.4	

EXAIR_Cat36_25_FROMINDESIGN.indb 85 12/20/24 3:46 PM

Air Atomizing Spray Nozzles

Internal Mix Narrow Angle Round Pattern - 1/2 NPT

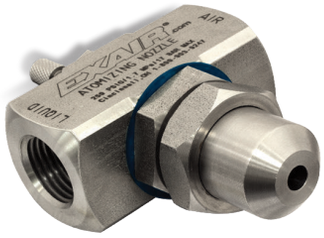

Model AN5010SS and AN5020SS

1/2 NPT internal mix narrow angle round pattern nozzles are excellent for spraying a concentrated mist of liquid. Because of the versatility of their adjustments, these larger atomizing nozzles can apply a heavy coat up close or send a very fine mist over 40 feet away! They are often used for higher volume application of lubricants during assembly, or marking items as they move through an assembly line.

For pressure fed applications not requiring independent air and liquid control.

Model: AN5010SS
Material: Type 303 Stainless Steel

Model: AN5020SS
Material: Type 303 Stainless Steel

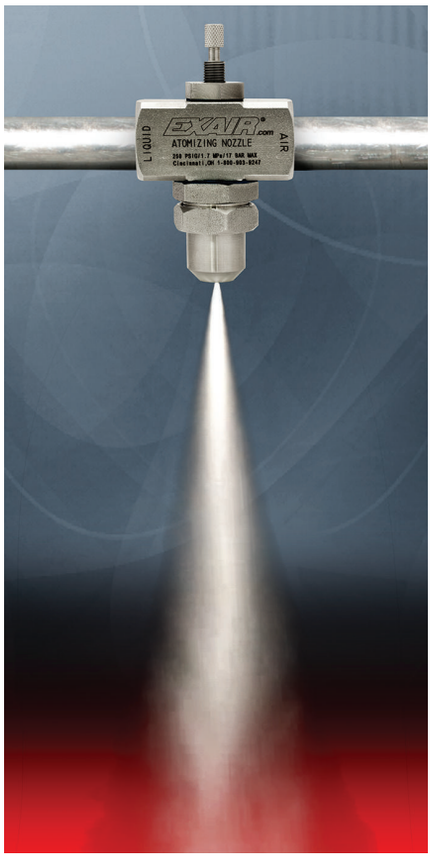

With adjustable liquid flow, these nozzles can be used to apply a heavy coat or a precise volume of liquid.

Dimensions and Airflow Pattern

DOWNLOAD drawings at EXAIR.com

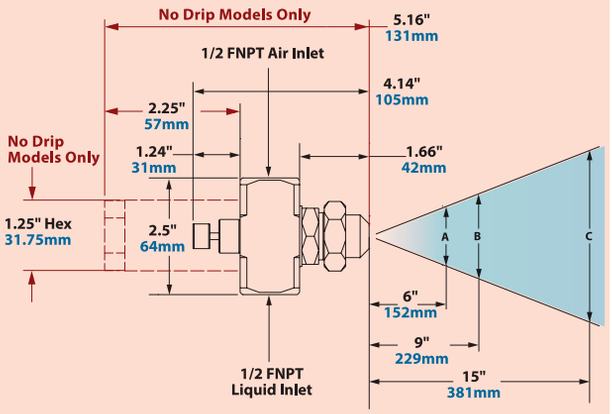

No Drip Only Dimensions in Red
See page 93 for No Drip Atomizing Nozzles

Spray Dimensions

Model	Pressure Air PSI/BAR		Pressure Liquid PSI/BAR		Width A in	Width A cm	Width B in	Width B cm	Width C in	Width C cm	Max. Depth feet/m		Model
AN5010SS	20	1.4	5	0.3	3.5	9	5.75	14.6	8.5	22	22	6.7	AN5010SS
	36	2.5	15	1.0							30	9.1	
	50	3.4	25	1.7							34	10.4	
	60	4.1	35	2.4							37	11.3	
AN5020SS	10	0.7	5	0.3	4	10	6	15.2	8.5	22	20	6.1	AN5020SS
	32	2.2	25	1.7	5.5	14	7.5	19.1	10	25	27	8.2	
	44	3.0	35	2.4	6	15	9	22.9	10.5	27	35	10.7	
	64	4.4	55	3.8	6	15	9	22.9	10.5	27	42	12.8	

Model	5 PSI/0.3 BAR Liquid						15 PSI/1.0 BAR Liquid						25 PSI/1.7 BAR Liquid						35 PSI/2.4 BAR Liquid						55 PSI/3.8 BAR Liquid						Model
	Air Pressure PSI/BAR		GPH/LPH		SCFM/SLPM		Air Pressure PSI/BAR		GPH/LPH		SCFM/SLPM		Air Pressure PSI/BAR		GPH/LPH		SCFM/ SLPM		Air Pressure PSI/BAR		GPH/LPH		SCFM/SLPM		Air Pressure PSI/BAR		GPH/LPH		SCFM/SLPM		
AN5010SS	18	1.2	9	34.1	12	339.8	28	1.9	27	102.2	14.5	411	38	2.6	51.6	195.3	16.4	464	48	3.3	75.6	286	18.4	521	---	---	---	---	---	---	AN5010SS
	20	1.4	7	26.5	12.8	362.5	32	2.2	20	75.7	16.2	459	44	3.0	32.4	122.6	19.5	552	60	4.1	36.6	139	25.3	716	---	---	---	---	---	---	
	22	1.5	6	22.7	13.6	385.2	38	2.6	20	75.7	19	538	54	3.7	22	83.3	24.3	688	72	5.0	21.6	82	31.0	878	---	---	---	---	---	---	
	24	1.7	4.5	17.0	14.5	410.6	42	2.9	12.5	47.3	20.4	578	60	4.1	18	68.1	26.9	762	78	5.4	16.8	64	33.7	954	---	---	---	---	---	---	
AN5020SS	10	0.7	30	113.6	13.7	388.0	18	1.2	98.4	372.4	15.6	442	26	1.8	159	601.8	17.6	498	36	2.5	183	693	20.0	566	54	3.7	231	874.3	26.0	736	AN5020SS
	12	0.8	18.6	70.4	16.2	458.8	20	1.4	73.2	277.1	17.9	507	32	2.2	99	374.7	23.7	671	42	2.9	126	477	26.1	739	60	4.1	168	635.9	33.4	946	
	---	---	---	---	---	---	22	1.5	63.6	240.7	20.3	575	36	2.5	75	283.9	28.6	810	46	3.2	96	363	31.0	878	72	5.0	76	287.7	47.2	1337	
	---	---	---	---	---	---	24	1.7	52.8	199.8	22.6	640	40	2.8	57.6	218.0	33.0	935	52	3.6	71	269	37.7	1068	76	5.2	54	204.4	51.3	1453	

For Technical Assistance, Call an EXAIR Application Engineer 1-800-903-9247
Toll Free FAX (866) 329-3924 • E-mail: techelp@exair.com • www.exair.com

EXAIR_Cat36_25_FROMINDESIGN.indb 86 12/20/24 3:46 PM

An INTELLIGENT COMPRESSED AIR® Product

Internal Mix Wide Angle Round Pattern - 1/2 NPT

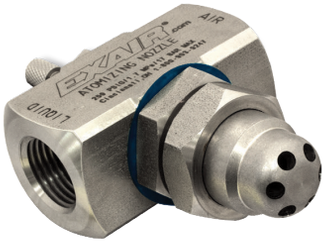

Model: AW5010SS
Material: Type 303 Stainless Steel

Model: AW5020SS
Material: Type 303 Stainless Steel

Model: AW5030SS
Material: Type 303 Stainless Steel

Model AW5010SS, AW5020SS and AW5030SS

EXAIR's 1/2 NPT internal mix wide angle round pattern atomizing nozzles are great for covering a broad area. These larger atomizing nozzles can be adjusted for a light mist or a heavy soaking spray. They are popular for dust mitigation, humidification, and cooling of products, people or livestock in a broad area. These nozzles are also perfect for applying a coating to parts packed in large containers, for example, misting a container of stamped steel parts with oil to prevent oxidation during shipment.

For pressure fed applications not requiring independent air and liquid control.

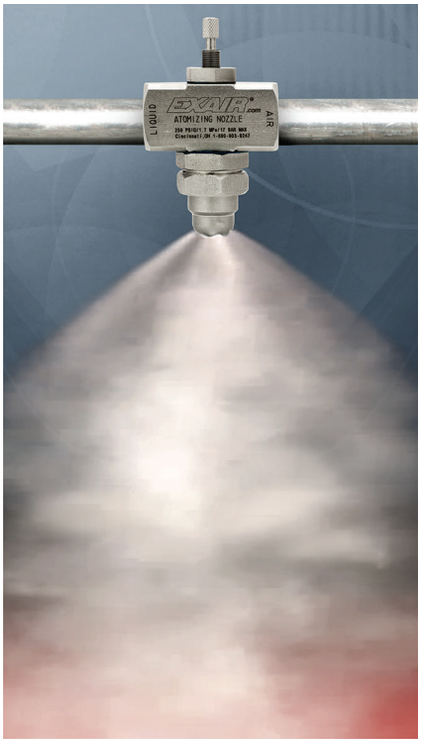

Produce a large volume, fine mist or a hard hitting spray with these adjustable liquid nozzles.

Dimensions and Airflow Pattern

DOWNLOAD drawings at EXAIR.com

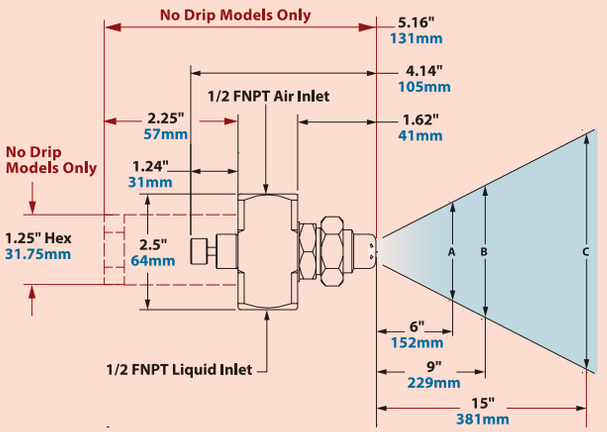

No Drip Only Dimensions in Red
See page 93 for No Drip Atomizing Nozzles

Model	5 PSI/0.3 BAR Liquid						15 PSI/1.0 BAR Liquid						25 PSI/1.7 BAR Liquid						35 PSI/2.4 BAR Liquid						55 PSI/3.8 BAR Liquid						Spray Dimensions												Model
	Air Pressure PSI/BAR		GPH/ LPH		SCFM/ SLPM		Air Pressure PSI/BAR		GPH/ LPH		SCFM/ SLPM		Air Pressure PSI/BAR		GPH/ LPH		SCFM/ SLPM		Air Pressure PSI/BAR		GPH/ LPH		SCFM/ SLPM		Air Pressure PSI/BAR		GPH/ LPH		SCFM/ SLPM		Pressure Air PSI/ BAR	Pressure Liquid PSI/ BAR	Width A in	Width A cm	Width B in	Width B cm	Width C in	Width C cm	Max. Depth feet/m			
AW5010SS	---	---	---	---	---	---	---	---	---	---	---	---	28	1.9	33	125	7.6	215	40	2.8	28.8	109	11.0	312	58	4.0	66	250	11.7	331	30	2.1	25	1.7	12.5	31.8	18	46	26	66	18	5.5	AW5010SS
	---	---	---	---	---	---	---	---	---	---	---	---	30	2.1	20.4	77	10.0	283	42	2.9	18	68	13.3	377	60	4.1	49	185	13.4	379	40	2.8	35	2.4	13	33.0	19	48	26	66	20	6.1	
	---	---	---	---	---	---	---	---	---	---	---	---	---	---	---	---	---	---	---	---	---	---	---	---	62	4.3	36	136	16.8	476	60	4.1	55	3.8	14	35.6	19	48	26.5	67	22	6.7	
AW5020SS	10	0.69	32	121	12.0	340	26	1.8	36.8	139	21.8	617	40	2.8	60.6	229	29.9	847	54	3.7	70	265	37.4	1059	75	5.2	115	435	45.6	1291	12	0.8	5	0.3	15	38.1	19.5	50	25	64	22	6.7	AW5020SS
	12	0.83	20.4	77	14.5	411	30	2.1	28.8	109	25.6	725	44	3.0	40.8	154	33.5	949	58	4.0	49.2	186	41.2	1167	80	5.5	94	356	50.2	1422	46	3.2	25	1.7	16	40.6	20	51	25	64	35	10.7	
	14	0.97	13.2	50	16.2	459	32	2.2	21	79	27.7	784	48	3.3	26.4	100	38.2	1082	62	4.3	36	136	44.7	1266	---	---	---	---	---	---	60	4.1	35	2.4	15	38.1	18	46	22	56	40	12.2	
	---	---	---	---	---	---	34	2.3	15.6	59	29.6	838	50	3.4	20.4	77	39.1	1107	65	4.5	27	102	46.9	1328	---	---	---	---	---	---	80	5.5	55	3.8	13	33.0	17	43	20.5	52	45	13.7	
AW5030SS	10	0.69	31.2	118	12.8	362	18	1.2	112	424	14.6	413	26	1.8	180	681	17.0	481	36	2.5	210	795	21.2	600	54	3.7	264	999	28.2	799	10	0.7	5	0.3	16	40.6	21	53	31	79	20	6.1	AW5030SS
	12	0.83	18.6	70	15.15	429	20	1.4	87	329	16.5	467	30	2.1	138	522	20.6	583	40	2.8	177	670	25.0	708	62	4.3	216	818	36.0	1020	20	1.4	15	1.0	16	40.6	20.5	52	27	69	22	6.7	
	---	---	---	---	---	---	22	1.5	72	273	18.5	524	36	2.5	83.4	316	26.7	756	48	3.3	102	386	32.5	920	70	4.8	150	568	42.4	1201	44	3.0	35	2.4	13	33.0	17	43	22	56	35	10.7	
	---	---	---	---	---	---	24	1.7	60	227	20.4	578	40	2.8	61.2	232	31.0	878	52	3.6	82.2	311	36.7	1039	76	5.2	111	420	48.1	1362	64	4.4	55	3.8	13.5	34.3	17	43	22	56	44	13.4	

EXAIR_Cat36_25_FROMINDESIGN.indb 87 12/20/24 3:46 PM

Air Atomizing Spray Nozzles

Internal Mix Flat Fan Pattern - 1/2 NPT

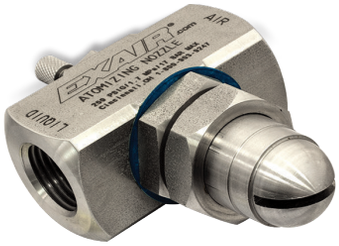

Model: AF5010SS
Material: Type 303 Stainless Steel

Model: AF5020SS
Material: Type 303 Stainless Steel

Model AF5010SS and AF5020SS

1/2 NPT internal mix flat fan pattern atomizing nozzles are designed with efficiency in mind. Especially good for vertical or horizontal assembly lines, the broad thin pattern of these larger atomizing nozzles makes efficient use of your expensive liquids. Their output can be adjusted for a very light film or a heavy coat of atomized liquid. Whether it's applying paint to hanging sheet metal, or using a water mist to cool a laminate web, flat fan atomizing nozzles cover a wide flat area, ideal for products moving on a conveyor.

For pressure fed applications not requiring independent air and liquid control.



Use the adjustable liquid valve to apply just the right amount of liquid for your application.

Dimensions and Airflow Pattern

DOWNLOAD drawings at EXAIR.com

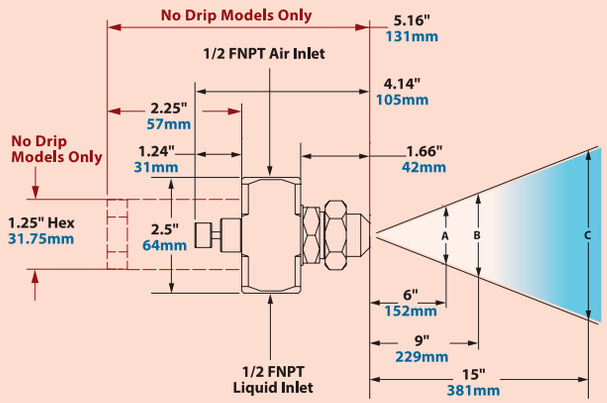

No Drip Only Dimensions in Red
See page 93 for No Drip Atomizing Nozzles

Need Help Choosing The Best Atomizing Nozzle For Your Application?

Not sure which atomizing nozzle is required?
Our Application Engineers can assist you in determining the correct model.
Call **1-800-903-9247** to speak with an Application Engineer.

Spray Dimensions

Model	Pressure Air PSI/BAR		Pressure Liquid PSI/BAR		Width A in	Width A cm	Width B in	Width B cm	Width C in	Width C cm	Max. Depth feet/m		Model
AF5010SS	20	1.4	10	0.7	25	64	34	86	45	114	14	4.3	AF5010SS
	40	2.8	20	1.4	28	71	36	91	46	117	18	5.5	
	50	3.4	25	1.7	29	74	38	97	48	122	22	6.7	
	70	4.8	40	2.8	32	81	42	107	51	130	27	8.2	
AF5020SS	10	0.7	5	0.3	21	53	27	69	36	91	13	4.0	AF5020SS
	20	1.4	15	1.0	34	86	42	107	52	132	15	4.6	
	44	3.0	35	2.4	39	99	47	119	64	163	19	5.8	
	64	4.4	55	3.8	40	102	50	127	68	173	20	6.1	

Model	5 PSI/0.3 BAR Liquid						15 PSI/1.0 BAR Liquid						25 PSI/1.7 BAR Liquid						35 PSI/2.4 BAR Liquid						55 PSI/3.8 BAR Liquid						Model
	Air Pressure PSI/BAR		GPH/LPH		SCFM/SLPM		Air Pressure PSI/BAR		GPH/LPH		SCFM/SLPM		Air Pressure PSI/BAR		GPH/LPH		SCFM/ SLPM		Air Pressure PSI/BAR		GPH/LPH		SCFM/SLPM		Air Pressure PSI/BAR		GPH/LPH		SCFM/SLPM		
AF5010SS	---	---	---	---	---	---	28	1.9	33.6	127	23.4	663	44	3.0	38.4	145	32.4	918	58	4.0	46.2	175	40.3	1141	---	---	---	---	---	---	AF5010SS
	---	---	---	---	---	---	30	2.1	25.2	95	25.3	716	48	3.3	35.8	136	36.2	1025	62	4.3	34.8	132	43.5	1232	---	---	---	---	---	---	
	---	---	---	---	---	---	34	2.3	12.6	48	28.7	813	50	3.4	18	68	38.0	1076	65	4.5	25.2	95	46.0	1303	---	---	---	---	---	---	
	---	---	---	---	---	---	36	2.5	11.5	44	31.2	884	60	4.1	3.5	13	46.0	1303	70	4.8	16.2	61	49.7	1408	---	---	---	---	---	---	
AF5020SS	10	0.69	18	68	18.0	510	18	1.2	87.6	332	15.6	442	26	1.8	150	568	17.9	507	36	2.5	177	670	22.3	632	54	3.7	231	874	29.3	830	AF5020SS
	12	0.83	6	23	6.0	170	20	1.4	62.4	236	18.4	521	30	2.1	99	375	22.3	632	40	2.8	132	500	26.6	753	60	4.1	186	704	35.6	1008	
	---	---	---	---	---	---	22	1.5	45.6	173	20.6	583	36	2.5	50.4	191	29.9	847	46	3.2	76.8	291	34.4	974	68	4.7	108	409	44.4	1257	
	---	---	---	---	---	---	24	1.7	30.6	116	23.3	660	40	2.8	26.4	100	35.2	997	52	3.6	38.4	145	41.5	1175	76	5.2	66	250	53.13	1505	

EXAIR_Cat36_25_FROMINDESIGN.indb 88 12/20/24 3:46 PM

An INTELLIGENT COMPRESSED AIR® Product

2018 Plant Engineering PRODUCT of the YEAR Bronze Award

Internal Mix 360° Hollow Circular Pattern - 1/2 NPT



Model: AT5010SS
Material: Type 303 Stainless Steel

Model AT5010SS

1/2 NPT internal mix 360° nozzles are designed for applications where the spray pattern must be oriented away from the nozzle in all directions. These larger 360° nozzles are ideal where a smooth, even coating is needed on the ID of pipe or similar ductwork. They also work great for operations where a mist over a broad area is needed, such as dust suppression, humidification and cooling.

For pressure fed applications not requiring independent air and liquid control.

Dimensions and Airflow Pattern

DOWNLOAD drawings at EXAIR.com

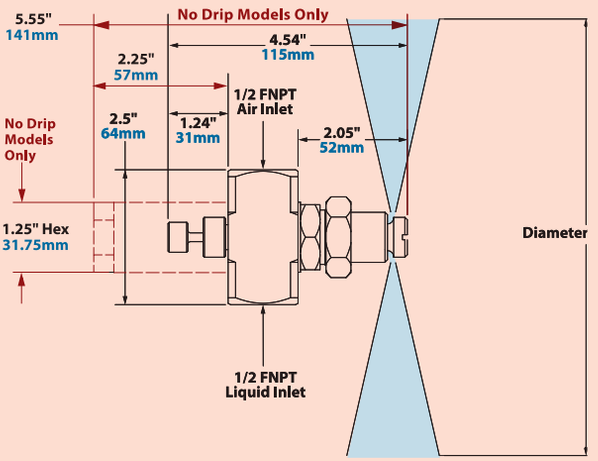

No Drip Only Dimensions in Red
See page 93 for No Drip Atomizing Nozzles

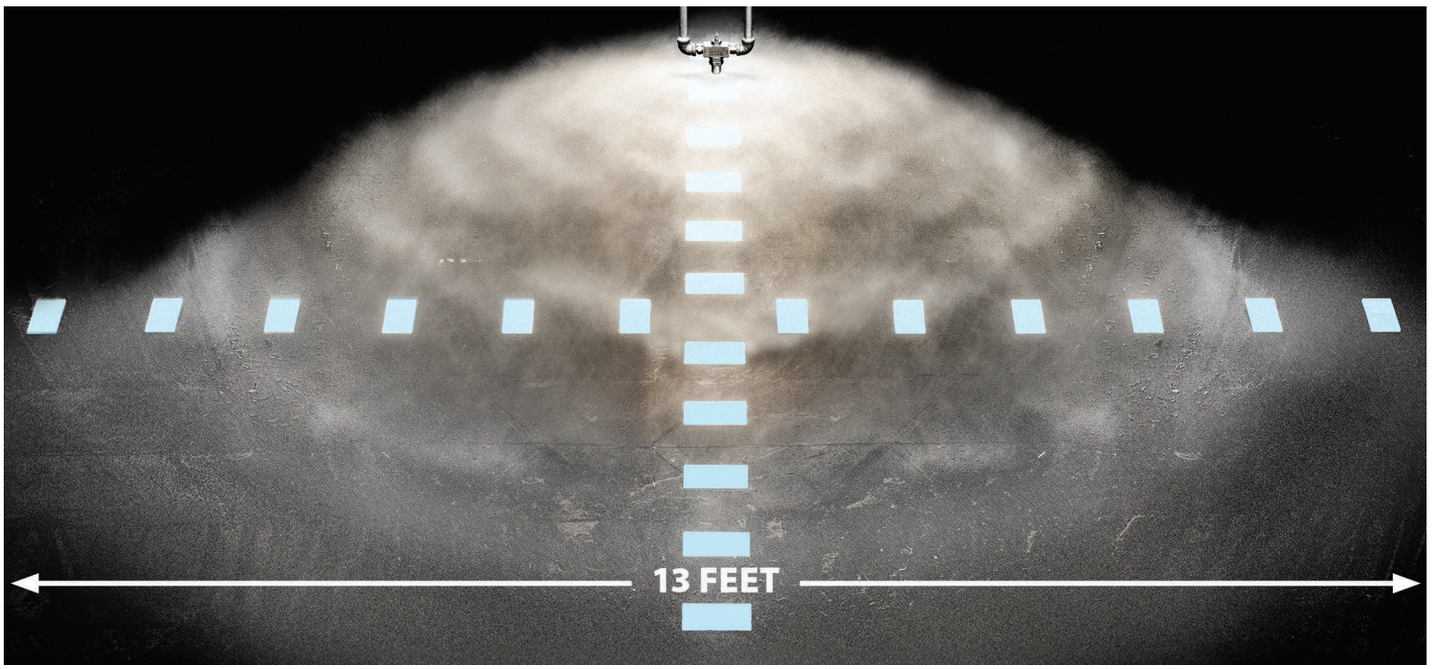

360° circular pattern nozzles can be used to coat inside diameters or cover a broad area up to 13' (4m).

Model	10 PSI/0.7 BAR Liquid						20 PSI/1.4 BAR Liquid						30 PSI/2.1 BAR Liquid						40 PSI/2.8 BAR Liquid						60 PSI/4.1 BAR Liquid						Spray Dimensions					
	Air Pressure PSI/BAR		GPH/LPH		SCFM/ SLPM		Air Pressure PSI/BAR		GPH/LPH		SCFM/ SLPM		Air Pressure PSI/BAR		GPH/LPH		SCFM/ SLPM		Air Pressure PSI/BAR		GPH/LPH		SCFM/ SLPM		Air Pressure PSI/BAR		GPH/LPH		SCFM/ SLPM		Pressure Air PSI/BAR	Pressure Liquid PSI/BAR	Diameter in	Diameter cm		
AT5010SS	14	1.0	54	204	13.7	388	24	1.7	100	379	17.3	490	36	2.5	114	431	23.7	671	48	3.3	132	500	29.6	838	72	5.0	150	568	41.5	1175	16	1.1	10	0.7	56	142	AT5010SS
	16	1.1	33.6	127	16.3	462	28	1.9	66	250	21.8	617	40	2.8	83	314	28.0	793	54	3.7	85	322	36.2	1025	76	5.2	120	454	45.6	1291	42	2.9	30	2.1	112	284	
	18	1.2	16.8	64	18.5	524	32	2.2	32.5	123	26.7	756	46	3.2	38.4	145	34.6	980	60	4.1	42	159	42.7	1209	78	5.4	108	409	47.9	1357	56	3.9	40	2.8	144	366	
	20	1.4	10.8	41	20.0	566	36	2.5	12	45	30.8	872	50	3.4	14.4	55	39.1	1107	66	4.6	15.6	59	49.9	1413	82	5.7	84	318	51.5	1458	80	5.5	60	4.1	156	396	

EXAIR_Cat36_25_FROMINDESIGN.indb 89 12/20/24 3:46 PM

Air Atomizing Spray Nozzles

External Mix Narrow Angle Flat Fan Pattern - 1/2 NPT

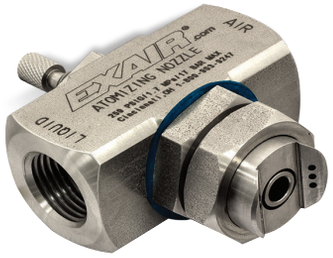

Model: EF5010SS
Material: Type 303 Stainless Steel

Model EF5010SS

1/2 NPT external mix narrow angle flat fan pattern nozzles are great where a high volume of liquid is needed over a concentrated area. Since they are external mix, airflow and liquid flow can be controlled independently. External mix narrow angle flat fan pattern nozzles are the best choice where thicker liquids for a heavy coating are needed over a narrow band, such as a paint line.

For pressure fed applications with independent air and liquid control.

2016 Plant Engineering PRODUCT of the YEAR Bronze Award

Dimensions and Airflow Pattern

DOWNLOAD drawings at EXAIR.com

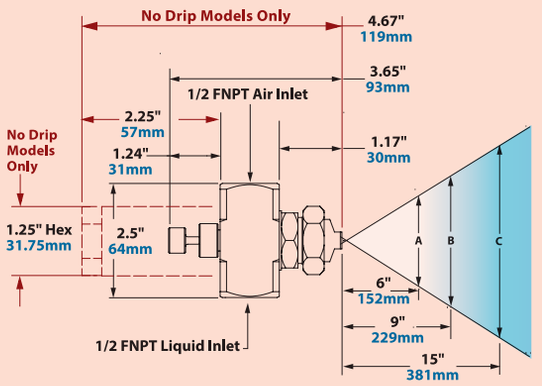

No Drip Only Dimensions in Red
See page 93 for No Drip Atomizing Nozzles

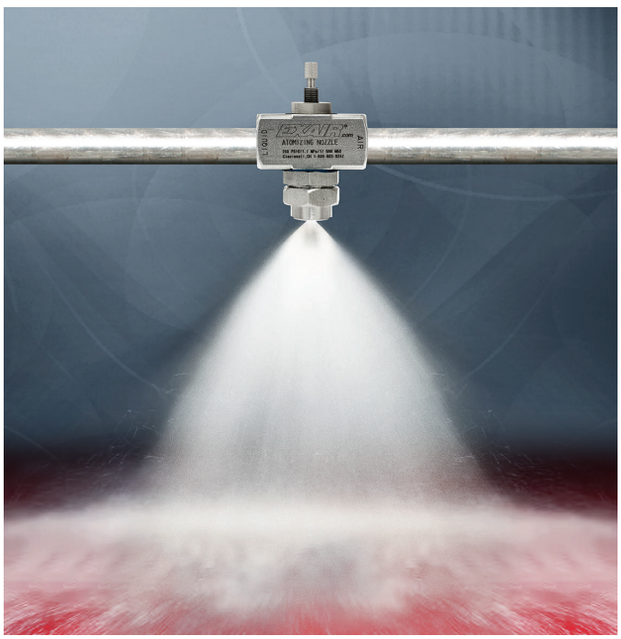

External mix narrow angle flat fan nozzles provide a high volume of liquid in a concentrated area.

TECHELP DIRECT 1-800-903-9247

Built to Last 5 yr. WARRANTY
See our Terms & Conditions

Model	3 PSI/0.2 BAR Liquid				5 PSI/0.3 BAR Liquid				7 PSI/0.5 BAR Liquid				10 PSI/0.7 BAR Liquid				15 PSI/1.0 BAR Liquid				Spray Dimensions												
	Air Pressure PSI/BAR		GPH/LPH		SCFM/SLPM		Air Pressure PSI/BAR		GPH/LPH		SCFM/SLPM		Air Pressure PSI/BAR		GPH/LPH		SCFM/SLPM		Air Pressure PSI/BAR		GPH/LPH		SCFM/SLPM		Pressure				Width						Max. Depth feet/m		
																									Air PSI/BAR		Liquid PSI/BAR		A		B		C				
																													in	cm	in	cm	in	cm			
EF5010SS	30	2.1	141	534	30.2	854	40	2.8	186	704	36.6	1037	45	3.1	218	825	39.9	1130	55	3.8	264	999	46.4	1314	80	5.5	303	1147	56.0	1586	35	2.4	3	0.2	15	38	18.5	47	22	56	25	7.6	EF5010SS
	35	2.4			34.0	961	45	3.1			40.4	1144	55	3.8			47.0	1331	60	4.1			49.75	1409	85	5.9			60.0	1699	50	3.4	5	0.3	15	38	19	48	23	58	31	9.4	
	40	2.8			37.3	1055	55	3.8			47.4	1342	60	4.1			49.5	1402	70	4.8			52.84	1496	90	6.2			61.4	1739	70	4.8	10	0.7	15	38	20	51	25	64	33	10.1	
	45	3.1			40.8	1155	60	4.1			50.0	1416	70	4.8			56.8	1609	80	5.5			59.7	1691	100	6.9			67.6	1914	90	6.2	15	1.0	15	38	20	51	25	64	35	10.7	

For Technical Assistance, Call an EXAIR Application Engineer 1-800-903-9247
Toll Free FAX (866) 329-3924 • E-mail: techelp@exair.com • www.exair.com

EXAIR_Cat36_25_FROMINDESIGN.indb 90 12/20/24 3:46 PM

An INTELLIGENT COMPRESSED AIR® Product

Siphon Fed Round Pattern - 1/2 NPT

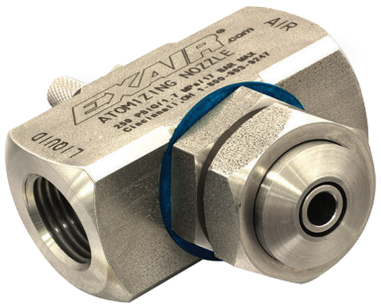

Model: SR5010SS
Material: Type 303 Stainless Steel

Model SR5010SS

1/2 NPT siphon fed round pattern nozzles are great where no liquid pressure is available and a heavy coating is needed at a specific area. Flow rate of these larger atomizing nozzles is adjustable via the adjusting valve. 1/2 NPT Siphon nozzles work best with a suction height of 24" or less. Since these nozzles are siphon fed, the compressed airflow draws the liquid in and mixes it internally. Liquid flow is dependent both on the gravity or suction height and the airflow. 1/2 NPT siphon fed round pattern nozzles provide the most liquid flow of any siphon fed nozzle.

Siphon or gravity fed for non-pressurized applications.

Dimensions and Airflow Pattern

DOWNLOAD drawings at EXAIR.com

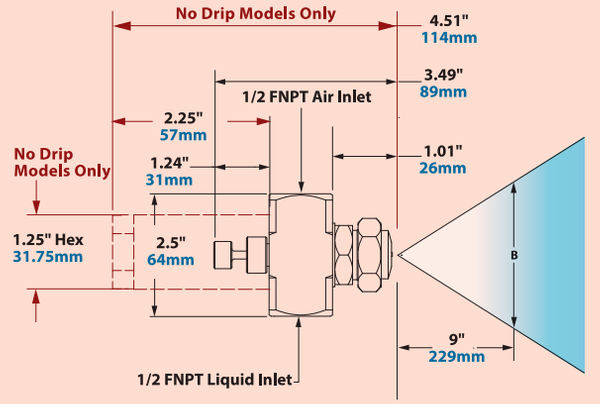

No Drip Only Dimensions in Red
See page 93 for No Drip Atomizing Nozzles



Use a siphon fed nozzle when no liquid pressure is available.

Air and Liquid Caps are Interchangeable!



Changing liquid volume and/or liquid air pattern can be done in the field. EXAIR's vast selection of caps are all interchangeable!

Model	Liquid Flow in GPH/LPH																		Spray Dimensions at 8" (20cm) Siphon Height						
	Air				Gravity Head						Siphon Height								Air		Width B		Max. Depth		
	Pressure PSI/BAR		SCFM/ SLPM		18"	46cm	12"	30cm	6"	15cm	4"	10cm	8"	20cm	12"	30cm	24"	61cm	Pressure PSI/BAR		in	cm	feet/m		
SR5010SS	20	1.4	19.3	547	---	---	---	---	---	---	22.1	84	14.3	54	---	---	---	---	20	1.4			22	6.7	SR5010SS
	30	2.1	25.2	714	---	---	---	---	---	---	28.6	108	25.7	97	12.3	47	---	---	30	2.1			25	7.6	
	40	2.8	32.8	929	---	---	56.8	215	41	155	31.5	119	28.4	107	19.6	74	---	---	40	2.8			28	8.5	
	50	3.4	36.7	1039	61	231	57.4	217	42.8	162	32.1	121	30.2	114	21.8	83	---	---	50	3.4	6	15	29	8.8	
	60	4.1	42.2	1195	59.1	224	57.4	217	43.8	166	33.1	125	33	125	25.7	97	9.9	37	60	4.1			31	9.4	
	70	4.8	47.7	1351	66	250	58.6	222	43.8	166	35.3	134	35.3	134	29.7	112	12.5	47	70	4.8			35	10.7	
	80	5.5	52.9	1498	68.3	259	59.1	224	44.5	168	44.6	169	36.9	140	31.5	119	17.5	66	80	5.5			37	11.3	

EXAIR_Cat36_25_FROMINDESIGN.indb 91 12/20/24 3:46 PM

No Drip Air Atomizing Spray Nozzles





Eliminate drips to conserve valuable liquids and improve product finishes!

What Are No Drip Atomizing Nozzles?

EXAIR's patented† no drip atomizing spray nozzles work in the same way our standard atomizing nozzles do, but have the added benefit of positively stopping liquid flow when compressed air is shut off. All models use stainless steel construction for durability and corrosion resistance.

EXAIR's no drip atomizing nozzles are available in 3 basic families:

Internal Mix:
Internal mix nozzles mix the liquid and air inside the air cap and produce the finest atomization. Internal mix nozzles can be used on liquids with a viscosity up to 300 cP. Both air and liquid sides are pressure fed. **No Drip Internal Mix Atomizing Nozzles are for pressure fed applications not requiring independent air and liquid control.**

External Mix:
External mix nozzles have the highest flow rates and allow the air and liquid flows to be adjusted independently. These nozzles are best where precise liquid flow is needed. External mix nozzles can be used on liquids with a viscosity above 300 cP. Both air and liquid sides are pressure fed. **No Drip External Mix Atomizing Nozzles are for pressure fed applications with independent air and liquid control.**

Siphon Fed:
Siphon fed nozzles require no liquid pressure and can be used with gravity fed liquids or lift liquids from a siphon height as much as 36 inches (91cm). Siphon fed nozzles can be used on liquids with a viscosity up to 200 cP. **No Drip Siphon Fed Atomizing Nozzles are siphon or gravity fed for non-pressurized applications.**

† Patent #9156045

Why No Drip Atomizing Nozzles?

When spraying any type of liquid, post-spray liquid flow can cause big problems. Unwanted drips can ruin product finishes on painted or coated surfaces. In addition, excess liquid flow wastes precious resources such as expensive coatings, chemicals or water. EXAIR's no drip atomizing nozzles are ideal where no post-spray drip is permissible. When the compressed air supply is shut off, the no drip nozzle positively seals off the flow of liquid eliminating the possibility of drips. They can be used in any situation that our standard atomizing nozzles can be used, including Siphon Fed applications. Unlike some manufacturers, there's no need to run a separate air line to control the no drip mechanism. The same compressed air used to combine and atomize liquid in a variety of patterns is used to open a valve allowing liquid to flow. That makes these ideal for use with EXAIR's money and energy saving EFC (see page 7).

EXAIR's no drip nozzles do not change flow rates from standard atomizing nozzles. Operations that require up to 180 cycles per minute can be achieved. Minimum operating air pressure of 30 PSIG (2.1 BAR) required for 1/4 and 1/2 NPT nozzles. 20 PSIG (1.4 BAR) is required for 1/8 NPT nozzles.

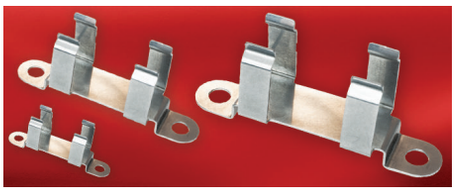

Built to Last 5 yr. WARRANTY
See our Terms & Conditions page for complete details.

Mounting Brackets are available - Model 901786 for 1/8 NPT, Model 901318 for 1/4 NPT and Model 901556 for 1/2 NPT atomizing nozzles.

Applications

- Painting
- Coating
- Rinsing
- Cooling
- Quenching
- Wetting (moistening)
- Humidification
- Dust Control

Advantages

- No post spray drip
- Adjustable
- Easily used with an EFC
- Minimizes air and liquid consumption
- All stainless steel construction
- Fine atomization
- Interchangeable liquid and air caps
- Compact

No Drip Air Atomizing Spray Nozzles

An INTELLIGENT COMPRESSED AIR® Product

No Drip Internal Mix Atomizing Nozzles are for pressure fed applications not requiring independent air and liquid control.





NO DRIP INTERNAL MIX ATOMIZING NOZZLES

Model	Description
No Drip Internal Mix Narrow Angle Round Pattern Atomizing Nozzles	
AN9010SS	No Drip Internal Mix Narrow Angle Round Pattern Atomizing Nozzles, 2.63 GPH/9.96 LPH Max, 1/8 NPT
AN9020SS	No Drip Internal Mix Narrow Angle Round Pattern Atomizing Nozzles, 3.33 GPH/12.61 LPH Max, 1/8 NPT
AN9030SS	No Drip Internal Mix Narrow Angle Round Pattern Atomizing Nozzles, 6.3 GPH/23.85 LPH Max, 1/8 NPT
AN9040SS	No Drip Internal Mix Narrow Angle Round Pattern Atomizing Nozzles, 12.00 GPH/45.42 LPH Max, 1/8 NPT
AN9050SS	No Drip Internal Mix Narrow Angle Round Pattern Atomizing Nozzles, 18.93 GPH/71.66 LPH Max, 1/8 NPT
AN2010SS	No Drip Internal Mix Narrow Angle Round Pattern Atomizing Nozzles, 3.3 GPH/12.5 LPH Max, 1/4 NPT
AN2020SS	No Drip Internal Mix Narrow Angle Round Pattern Atomizing Nozzles, 9.9 GPH/37.5 LPH Max, 1/4 NPT
AN2030SS	No Drip Internal Mix Narrow Angle Round Pattern Atomizing Nozzles, 23.0 GPH/87.1 LPH Max, 1/4 NPT
AN2040SS	No Drip Internal Mix Narrow Angle Round Pattern Atomizing Nozzles, 66.0 GPH/250 LPH Max, 1/4 NPT
AN6010SS	No Drip Internal Mix Narrow Angle Round Pattern Atomizing Nozzles, 75.6 GPH/286 LPH Max, 1/2 NPT
AN6020SS	No Drip Internal Mix Narrow Angle Round Pattern Atomizing Nozzles, 231.0 GPH/874 LPH Max, 1/2 NPT
No Drip Internal Mix Wide Angle Round Pattern Atomizing Nozzles	
AW9010SS	No Drip Internal Mix Wide Angle Round Pattern Atomizing Nozzles, 2.60 GPH/9.84 LPH Max, 1/8 NPT
AW9020SS	No Drip Internal Mix Wide Angle Round Pattern Atomizing Nozzles, 9.83 GPH/37.22 LPH Max, 1/8 NPT
AW9030SS	No Drip Internal Mix Wide Angle Round Pattern Atomizing Nozzles, 15.00 GPH/56.78 LPH Max, 1/8 NPT
AW9040SS	No Drip Internal Mix Wide Angle Round Pattern Atomizing Nozzles, 22.33 GPH/84.54 LPH Max, 1/8 NPT
AW2010SS	No Drip Internal Mix Wide Angle Round Pattern Atomizing Nozzles, 3.5 GPH/13.2 LPH Max, 1/4 NPT
AW2020SS	No Drip Internal Mix Wide Angle Round Pattern Atomizing Nozzles, 8.5 GPH/32.2 LPH Max, 1/4 NPT
AW2030SS	No Drip Internal Mix Wide Angle Round Pattern Atomizing Nozzles, 15.0 GPH/56.8 LPH Max, 1/4 NPT
AW2040SS	No Drip Internal Mix Wide Angle Round Pattern Atomizing Nozzles, 24.0 GPH/91 LPH Max, 1/4 NPT
AW6010SS	No Drip Internal Mix Wide Angle Round Pattern Atomizing Nozzles, 66.0 GPH/250 LPH Max, 1/2 NPT
AW6020SS	No Drip Internal Mix Wide Angle Round Pattern Atomizing Nozzles, 115.0 GPH/435 LPH Max, 1/2 NPT
AW6030SS	No Drip Internal Mix Wide Angle Round Pattern Atomizing Nozzles, 264.0 GPH/999 LPH Max, 1/2 NPT

EXAIR_Cat36_25_FROMINDESIGN.indb 93 12/20/24 3:46 PM

No Drip Air Atomizing Spray Nozzles







NO DRIP INTERNAL MIX ATOMIZING NOZZLES

Model	Description
No Drip Internal Mix Flat Fan Pattern Atomizing Nozzles	
AF9010SS	No Drip Internal Mix Flat Fan Pattern Atomizing Nozzles, 3.47 GPH/13.12 LPH Max, 1/8 NPT
AF9020SS	No Drip Internal Mix Flat Fan Pattern Atomizing Nozzles, 4.27 GPH/16.15 LPH Max, 1/8 NPT
AF9030SS	No Drip Internal Mix Flat Fan Pattern Atomizing Nozzles, 17.00 GPH/64.35 LPH Max, 1/8 NPT
AF9040SS	No Drip Internal Mix Flat Fan Pattern Atomizing Nozzles, 28.00 GPH/105.99 LPH Max, 1/8 NPT
AF2010SS	No Drip Internal Mix Flat Fan Pattern Atomizing Nozzles, 3.2 GPH/12.1 LPH Max, 1/4 NPT
AF2020SS	No Drip Internal Mix Flat Fan Pattern Atomizing Nozzles, 4.7 GPH/17.8 LPH Max, 1/4 NPT
AF2030SS	No Drip Internal Mix Flat Fan Pattern Atomizing Nozzles, 11.0 GPH/41.6 LPH Max, 1/4 NPT
AF2040SS	No Drip Internal Mix Flat Fan Pattern Atomizing Nozzles, 18.3 GPH/69.3 LPH Max, 1/4 NPT
AF2050SS	No Drip Internal Mix Flat Fan Pattern Atomizing Nozzles, 42.0 GPH/159 LPH Max, 1/4 NPT
AF6010SS	No Drip Internal Mix Flat Fan Pattern Atomizing Nozzles, 46.2 GPH/175 LPH Max, 1/2 NPT
AF6020SS	No Drip Internal Mix Flat Fan Pattern Atomizing Nozzles, 231.0 GPH/874 LPH Max, 1/2 NPT
No Drip Internal Mix Deflected Flat Fan Pattern Atomizing Nozzles	
AD2010SS	No Drip Internal Mix Deflected Flat Fan Pattern Atomizing Nozzles, 6.9 GPH/26 LPH Max, 1/4 NPT
No Drip Internal Mix 360° Hollow Circular Pattern Atomizing Nozzles	
AT2010SS	No Drip Internal Mix 360° Hollow Circular Pattern Atomizing Nozzles, 14.7 GPH/55.7 LPH Max, 1/4 NPT
AT6010SS	No Drip Internal Mix 360° Hollow Circular Pattern Atomizing Nozzles, 150 GPH/568 LPH Max, 1/2 NPT

EXAIR_Cat36_25_FROMINDESIGN.indb 94 12/20/24 3:46 PM

No Drip Air Atomizing Spray Nozzles

An INTELLIGENT COMPRESSED AIR® Product

No Drip External Mix Atomizing Nozzles are for pressure fed applications with independent air and liquid control.





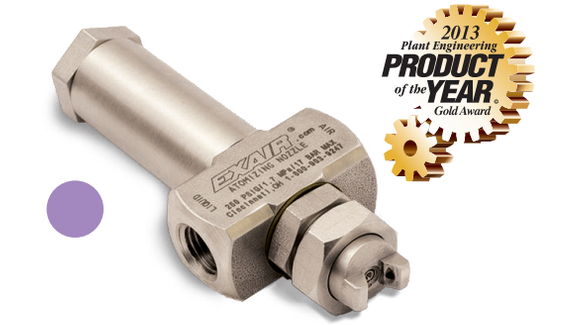

NO DRIP EXTERNAL MIX ATOMIZING NOZZLES

Model	Description
No Drip External Mix Round Pattern Atomizing Nozzles	
ER2010SS	No Drip External Mix Round Pattern Atomizing Nozzles, 3.8 GPH/14.4 LPH Max, 1/4 NPT
ER2020SS	No Drip External Mix Round Pattern Atomizing Nozzles, 7.5 GPH/28.4 LPH Max, 1/4 NPT
ER2030SS	No Drip External Mix Round Pattern Atomizing Nozzles, 14.0 GPH/53.0 LPH Max, 1/4 NPT
ER2040SS	No Drip External Mix Round Pattern Atomizing Nozzles, 31.0 GPH/117 LPH Max, 1/4 NPT
ER2050SS	No Drip External Mix Round Pattern Atomizing Nozzles, 60.0 GPH/227 LPH Max, 1/4 NPT
No Drip External Mix Narrow Angle Flat Fan Pattern Atomizing Nozzles	
EF9010SS	No Drip External Mix Narrow Angle Flat Fan Pattern Atomizing Nozzles, 2.00 GPH/7.57 LPH Max, 1/8 NPT
EF9020SS	No Drip External Mix Narrow Angle Flat Fan Pattern Atomizing Nozzles, 2.93 GPH/11.09 LPH Max, 1/8 NPT
EF9030SS	No Drip External Mix Narrow Angle Flat Fan Pattern Atomizing Nozzles, 7.67 GPH/29.03 LPH Max, 1/8 NPT
EF9040SS	No Drip External Mix Narrow Angle Flat Fan Pattern Atomizing Nozzles, 14.42 GPH/54.59 LPH Max, 1/8 NPT
EF9050SS	No Drip External Mix Narrow Angle Flat Fan Pattern Atomizing Nozzles, 25.00 GPH/94.64 LPH Max, 1/8 NPT
EF2010SS	No Drip External Mix Narrow Angle Flat Fan Pattern Atomizing Nozzles, 3.8 GPH/14.4 LPH Max, 1/4 NPT
EF2020SS	No Drip External Mix Narrow Angle Flat Fan Pattern Atomizing Nozzles, 7.5 GPH/28.4 LPH Max, 1/4 NPT
EF2030SS	No Drip External Mix Narrow Angle Flat Fan Pattern Atomizing Nozzles, 14.0 GPH/53.0 LPH Max, 1/4 NPT
EF2040SS	No Drip External Mix Narrow Angle Flat Fan Pattern Atomizing Nozzles, 31.0 GPH/117 LPH Max, 1/4 NPT
EF6010SS	No Drip External Mix Narrow Angle Flat Fan Pattern Atomizing Nozzles, 303.0 GPH/1,147 LPH Max, 1/2 NPT
No Drip External Mix Wide Angle Flat Fan Pattern Atomizing Nozzles	
EB2010SS	No Drip External Mix Wide Angle Flat Fan Pattern Atomizing Nozzles, 3.8 GPH/14.4 LPH Max, 1/4 NPT
EB2020SS	No Drip External Mix Wide Angle Flat Fan Pattern Atomizing Nozzles, 7.5 GPH/28.4 LPH Max, 1/4 NPT
EB2030SS	No Drip External Mix Wide Angle Flat Fan Pattern Atomizing Nozzles, 14.0 GPH/53.0 LPH Max, 1/4 NPT
EB2040SS	No Drip External Mix Wide Angle Flat Fan Pattern Atomizing Nozzles, 31.0 GPH/117 LPH Max, 1/4 NPT

EXAIR_Cat36_25_FROMINDESIGN.indb 95 12/20/24 3:46 PM

No Drip Air Atomizing Spray Nozzles

An INTELLIGENT COMPRESSED AIR® Product

No Drip Siphon Fed Atomizing Nozzles are siphon or gravity fed for non-pressurized applications.





NO DRIP SIPHON FED ATOMIZING NOZZLES

Model	Description
No Drip Siphon Fed Round Pattern Atomizing Nozzles	
SR9010SS	No Drip Siphon Fed Round Pattern Atomizing Nozzles, 0.53 GPH/2.02 LPH Max, 1/8 NPT
SR9020SS	No Drip Siphon Fed Round Pattern Atomizing Nozzles, 0.96 GPH/3.63 LPH Max, 1/8 NPT
SR9030SS	No Drip Siphon Fed Round Pattern Atomizing Nozzles, 1.98 GPH/7.50 LPH Max, 1/8 NPT
SR9040SS	No Drip Siphon Fed Round Pattern Atomizing Nozzles, 4.09 GPH/15.48 LPH Max, 1/8 NPT
SR9050SS	No Drip Siphon Fed Round Pattern Atomizing Nozzles, 5.12 GPH/19.38 LPH Max, 1/8 NPT
SR2010SS	No Drip Siphon Fed Round Pattern Atomizing Nozzles, 0.8 GPH/3.0 LPH Max, 1/4 NPT
SR2020SS	No Drip Siphon Fed Round Pattern Atomizing Nozzles, 1.9 GPH/7.2 LPH Max, 1/4 NPT
SR2030SS	No Drip Siphon Fed Round Pattern Atomizing Nozzles, 5.8 GPH/22.0 LPH Max, 1/4 NPT
SR2040SS	No Drip Siphon Fed Round Pattern Atomizing Nozzles, 15.0 GPH/56.8 LPH Max, 1/4 NPT
SR6010SS	No Drip Siphon Fed Round Pattern Atomizing Nozzles, 68.3 GPH/259 LPH Max, 1/2 NPT
No Drip Siphon Fed Flat Fan Pattern Atomizing Nozzles	
SF9010SS	No Drip Siphon Fed Flat Fan Pattern Atomizing Nozzles, 0.43 GPH/1.62 LPH Max, 1/8 NPT
SF9020SS	No Drip Siphon Fed Flat Fan Pattern Atomizing Nozzles, 1.52 GPH/5.75 LPH Max, 1/8 NPT
SF9030SS	No Drip Siphon Fed Flat Fan Pattern Atomizing Nozzles, 1.45 GPH/5.49 LPH Max, 1/8 NPT
SF2010SS	No Drip Siphon Fed Flat Fan Pattern Atomizing Nozzles, 0.4 GPH/1.5 LPH Max, 1/4 NPT
SF2020SS	No Drip Siphon Fed Flat Fan Pattern Atomizing Nozzles, 1.2 GPH/4.5 LPH Max, 1/4 NPT
SF2030SS	No Drip Siphon Fed Flat Fan Pattern Atomizing Nozzles, 1.9 GPH/7.2 LPH Max, 1/4 NPT

EXAIR_Cat36_25_FROMINDESIGN.indb 96 12/20/24 3:46 PM

An INTELLIGENT COMPRESSED AIR® Product

Liquid Atomizing Spray Nozzles



Pressurized liquid nozzles increase liquid flow for cooling, washing and rinsing!

What are Liquid Atomizing Spray Nozzles?

EXAIR's Liquid Atomizing Spray Nozzles require no air to operate. They produce droplets by spinning the liquid and breaking its surface tension through a precision orifice or by impacting the liquid on to a surface of the nozzle. Compared to EXAIR's Air Atomizing Spray Nozzles, liquid atomizing spray nozzles generate more liquid volume and produce a more coarse spray pattern. The higher liquid flow rates benefit some common industrial applications like cleaning, cooling, rinsing, dust suppression and washing. Many liquid atomizing spray nozzles operate well when the liquid they are spraying contains particulate or is a slurry.

Why Liquid Atomizing Spray Nozzles?

They are good general purpose nozzles for industry and are commonly used with inexpensive liquids like water, rinse aids or detergents while also very effective with chemicals, pesticides and herbicides. Adjustment of the liquid flow rate can be done with varying liquid pressure but without the same adjustability or refinement of Air Atomizing Spray Nozzles. Their smaller footprint allows for mounting in smaller spaces and with less plumbing required, since no air line is needed. Liquid nozzles, made of Type 303 stainless steel are durable and rugged, with no moving parts and have a maximum operating temperature of 800°F (427°C).

Built to Last 5 yr. WARRANTY
See our Terms & Conditions page for complete details

Applications

- Cooling
- Quenching
- Coating
- Dust suppression
- Washing
- Rinsing
- Foam breaking
- Slurry spraying
- Sanitizing
- Degreasing
- Lubricating

Advantages

- High liquid flow rates
- Increase surface area coverage
- Increase liquid volume on your target
- All stainless steel construction
- Compact footprint
- Versatile

EXAIR_Cat36_25_FROMINDESIGN.indb 97 12/20/24 3:47 PM

Liquid Atomizing Spray Nozzles

OmniStream™ Cone Nozzles - 1/4 NPT



Model: FL1008SS
Material: Type 303 Stainless Steel

Model: FL1010SS
Material: Type 303 Stainless Steel

Model: FL1011SS
Material: Type 303 Stainless Steel

Model FL1008SS, FL1010SS and FL1011SS

EXAIR's 1/4 NPT OmniStream Cone Nozzles, with a full cone spray pattern, are among the most common type of spray nozzles. Full cone spray nozzles are applied to solve cooling, cleaning, washing, rinsing and dust suppression applications throughout industry. Their tangential flow design is vaneless, which creates wide open internal features to resist clogging. This produces a uniform distribution in a full cone round pattern and medium to large droplets. Their right-angle design is compact and operates at up to 250 PSI liquid pressure. OmniStream nozzles also work well with liquids containing particulate.

Plant Engineering Product of the Year Finalist 2021

Dimensions and Spray Pattern

DOWNLOAD drawings at EXAIR.com

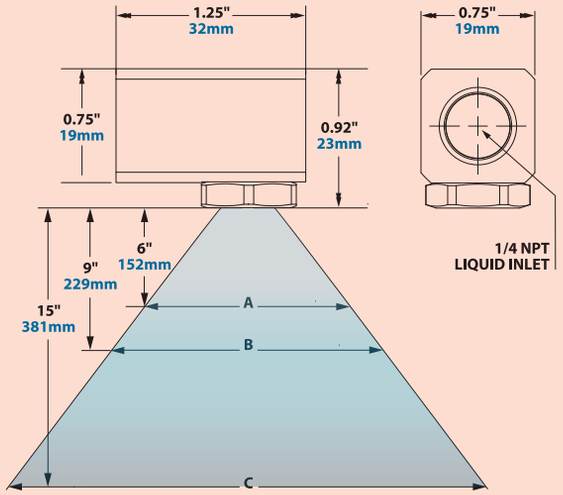

How OmniStream and HollowStream Cone Nozzles Work

With OmniStream and HollowStream nozzles, the atomizing fluid is supplied into the body of the nozzle creating a swirling action within the vortex chamber. This vortex produces a full cone spray pattern when the precisely machined nozzle breaks the liquid surface tension as it exits the orifice at a controlled spray angle.

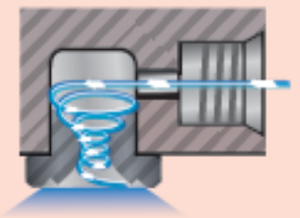

Compared to EXAIR's Air Atomizing Spray Nozzles the OmniStream will have higher liquid flow rates.

For maximum liquid conservation and spray control visit Air Atomizing Nozzles on page 70.



1/4 NPT OmniStream Cone Nozzle with full cone spray pattern is rinsing anodized aluminium pipe.

OmniStream Cone Nozzles

Inlet Connection	Model	Capacity	Max Free Passage		Flow Rate GPM/LPM 3 PSI	5 PSI	7 PSI	10 PSI	20 PSI	40 PSI	60 PSI
1/4 NPT	FL1008SS	8	0.109"	GPM	0.50	0.60	0.70	0.80	1.15	1.55	1.80
				LPM	1.89	2.27	2.65	3.03	4.35	5.87	6.81
	FL1010SS	10	0.125"	GPM	0.48	0.67	0.83	1.00	1.34	1.88	2.36
				LPM	1.82	2.54	3.14	3.79	5.07	7.12	8.93
	FL1011SS	11	0.144"	GPM	0.62	0.85	0.96	1.10	1.51	2.21	2.66
				LPM	2.35	3.22	3.63	4.16	5.72	8.36	10.07

Spray Angle

Inlet Pressure PSI	Inlet Pressure BAR	Width A in	A cm	B in	B cm	C in	C cm	
7	0.5	5.7	14	8.6	22	14.3	36	FL1008SS
20	1.4	7.4	19	11.0	28	18.4	47	
60	4.1	8.4	21	12.6	32	21.0	53	
7	0.5	6.8	17	10.2	26	17.0	43	FL1010SS
20	1.4	8.7	22	13.1	33	21.8	55	
60	4.1	10.1	26	15.1	38	25.2	64	
7	0.5	6.8	17	10.2	26	17.0	43	FL1011SS
20	1.4	8.7	22	13.1	33	21.8	55	
60	4.1	10.1	26	15.1	38	25.2	64	

EXAIR_Cat36_25_FROMINDESIGN.indb 98 12/20/24 3:47 PM

OmniStream™ Cone Nozzles - 3/8 NPT



Model: FL3011SS
Material: Type 303 Stainless Steel

Model: FL3013SS
Material: Type 303 Stainless Steel

Model: FL3016SS
Material: Type 303 Stainless Steel

Model: FL3020SS
Material: Type 303 Stainless Steel

Model: FL3023SS
Material: Type 303 Stainless Steel

Model: FL3026SS
Material: Type 303 Stainless Steel

Model: FL3029SS
Material: Type 303 Stainless Steel

Compared to EXAIR's Air Atomizing Spray Nozzles the OmniStream will have higher liquid flow rates.

For maximum liquid conservation and spray control visit Air Atomizing Nozzles on page 70.

Model FL3011SS, FL3013SS, FL3016SS, FL3020SS, FL3023SS, FL3026SS and FL3029SS

EXAIR's 3/8 NPT OmniStream Cone Nozzles, with a full cone spray pattern, are among the most common type of spray nozzles. Full cone spray nozzles are applied to solve cooling, cleaning, washing, rinsing and dust suppression applications throughout industry. Their tangential flow design is vaneless, which creates wide open internal features to resist clogging. This produces a uniform distribution in a full cone round pattern and medium to large droplets. Their right-angle design is compact and operates at up to 250 PSI liquid pressure. OmniStream nozzles also work well with liquids containing particulate.

Plant Engineering PRODUCT of the YEAR Finalist 2021

Dimensions and Spray Pattern

DOWNLOAD drawings at EXAIR.com

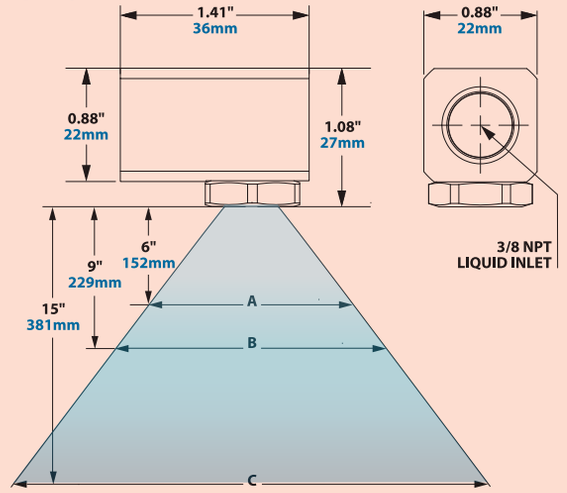



3/8 NPT OmniStream Cone Nozzle washing the inside of a 55 gallon drum.

Nozzles pipe/L1

OmniStream Cone Nozzles

Inlet Connection	Model	Capacity	Max Free Passage		Flow Rate GPM/LPM 3 PSI	5 PSI	7 PSI	10 PSI	20 PSI	40 PSI	60 PSI
3/8 NPT	FL3011SS	11	0.128"	GPM	0.57	0.76	0.91	1.10	1.52	2.20	2.70
				LPM	2.16	2.88	3.44	4.16	5.75	8.33	10.22
	FL3013SS	13	0.144"	GPM	0.75	0.95	1.13	1.30	1.86	2.60	3.34
				LPM	2.84	3.60	4.28	4.92	7.04	9.84	12.64
	FL3016SS	16	0.154"	GPM	0.98	1.10	1.25	1.60	2.23	2.90	3.60
				LPM	3.71	4.16	4.73	6.06	8.44	10.98	13.63
	FL3020SS	20	0.172"	GPM	1.22	1.64	1.88	2.00	2.98	4.24	4.82
				LPM	4.62	6.21	7.12	7.57	11.28	16.05	18.24
	FL3023SS	23	0.189"	GPM	1.36	1.76	1.96	2.30	3.18	4.56	5.38
				LPM	5.15	6.66	7.42	8.71	12.04	17.26	20.36
	FL3026SS	26	0.204"	GPM	1.26	1.80	2.02	2.60	3.30	5.18	6.12
				LPM	4.77	6.81	7.65	9.84	12.49	19.61	23.17
	FL3029SS	29	0.221"	GPM	1.30	1.84	2.28	2.90	3.62	5.48	6.48
				LPM	4.92	6.97	8.63	10.98	13.70	20.74	24.53

Spray Angle

Inlet Pressure PSI	Inlet Pressure BAR	Width A in	A cm	B in	B cm	C in	C cm	
7	0.5	8.1	21	12.1	31	20.2	51	FL3011SS
20	1.4	9.9	25	14.8	38	24.7	63	
60	4.1	10.4	26	15.6	40	26.1	66	
7	0.5	7.6	19	11.5	29	19.1	49	FL3013SS
20	1.4	9.0	23	13.6	35	22.6	57	
60	4.1	10.4	26	15.6	40	26.1	66	
7	0.5	7.6	19	11.5	29	19.1	49	FL3016SS
20	1.4	9.7	25	14.6	37	24.3	62	
60	4.1	10.4	26	15.6	40	26.1	66	
7	0.5	8.4	21	12.6	32	21.0	53	FL3020SS
20	1.4	9.9	25	14.8	38	24.7	63	
60	4.1	11.2	28	16.8	43	28.0	71	
7	0.5	9.0	23	13.6	35	22.6	57	FL3023SS
20	1.4	10.2	26	15.4	39	25.6	65	
60	4.1	11.2	28	16.8	43	18.0	46	
7	0.5	9.7	25	14.6	37	24.3	62	FL3026SS
20	1.4	10.8	27	16.2	41	27.0	69	
60	4.1	12.0	30	18.0	46	30.0	76	
7	0.5	9.9	25	14.8	38	24.7	63	FL3029SS
20	1.4	10.8	27	16.2	41	27.0	69	
60	4.1	12.0	30	18.0	46	30.0	76	

EXAIR_Cat36_25_FROMINDESIGN.indb 99 12/20/24 3:47 PM

Liquid Atomizing Spray Nozzles

OmniStream™ Cone Nozzles - 1/2 NPT



Model: FL5032SS
Material: Type 303 Stainless Steel

Model: FL5040SS
Material: Type 303 Stainless Steel

Model: FL5048SS
Material: Type 303 Stainless Steel

Model: FL5056SS
Material: Type 303 Stainless Steel

Model: FL5064SS
Material: Type 303 Stainless Steel

Model: FL5072SS
Material: Type 303 Stainless Steel

Liquid Nozzles

Model FL5032SS, FL5040SS, FL5048SS, FL5056SS, FL5064SS and FL5072SS

EXAIR's 1/2 NPT OmniStream Cone Nozzles, with a full cone spray pattern, are among the most common type of spray nozzles. Full cone spray nozzles are applied to solve cooling, cleaning, washing, rinsing and dust suppression applications throughout industry. Their tangential flow design is vaneless, which creates wide open internal features to resist clogging. This produces a uniform distribution in a full cone round pattern and medium to large droplets. Their right-angle design is compact and operates at up to 250 PSI liquid pressure. OmniStream nozzles also work well with liquids containing particulate.

Compared to EXAIR's Air Atomizing Spray Nozzles the OmniStream will have higher liquid flow rates.

For maximum liquid conservation and spray control visit Air Atomizing Nozzles on page 70.

Dimensions Spray Pattern

DOWNLOAD drawings at EXAIR.com

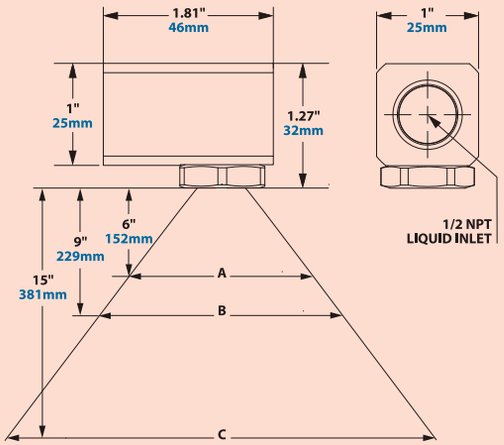

1/2 NPT OmniStream Cone Nozzle with cone spray pattern is cleaning red potatoes.

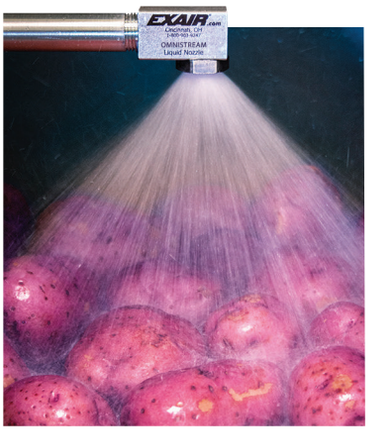

OmniStream Cone Nozzles

Inlet Connection	Model	Capacity	Max Free Passage	Flow Rate GPM/LPM	3 PSI	5 PSI	7 PSI	10 PSI	20 PSI	40 PSI	60 PSI
1/2 NPT	FL5032SS	32	0.201"	GPM	1.74	2.46	2.80	3.20	4.46	6.28	7.30
				LPM	6.59	9.31	10.60	12.11	16.88	23.77	27.63
	FL5040SS	40	0.242"	GPM	2.68	3.14	3.52	4.00	5.60	7.80	8.76
				LPM	10.14	11.89	13.32	15.14	21.20	29.53	33.16
	FL5048SS	48	0.281"	GPM	3.06	3.56	3.96	4.80	6.81	9.58	11.73
				LPM	11.28	13.48	15.00	18.17	25.78	39.26	44.40
	FL5056SS	56	0.295"	GPM	3.32	4.18	4.67	5.60	7.89	11.22	13.74
				LPM	12.57	15.82	17.68	21.20	29.87	42.47	52.01
	FL5064SS	64	0.328"	GPM	3.50	4.50	5.15	6.40	9.13	12.70	15.81
				LPM	13.25	17.03	19.49	24.23	34.56	48.07	59.85
	FL5072SS	72	0.359"	GPM	4.08	5.00	6.17	7.20	10.17	14.40	17.64
				LPM	15.44	18.93	23.36	27.25	38.50	54.51	66.77

Spray Angle

Inlet Pressure PSI/BAR		Width A in	A cm	B in	B cm	C in	C cm	
7	0.5	9.4	23.9	14.1	35.81	23.4	59.4	FL5032SS
20	1.4	10.1	25.7	15.1	38.3	25.2	64.0	
60	4.1	12.0	30.5	18.0	45.7	30.0	76.2	
7	0.5	10.1	25.7	15.1	38.4	25.2	64.0	FL5040SS
20	1.4	12.0	30.5	18.0	45.7	30.0	76.2	
60	4.1	13.1	33.3	19.6	49.8	32.7	83.1	
7	0.5	10.1	25.7	15.1	38.4	25.2	64.0	FL5048SS
20	1.4	12.0	30.5	18.0	45.7	30.0	76.2	
60	4.1	13.1	33.3	19.6	49.8	32.7	83.1	
7	0.5	11.0	28.0	16.5	42.0	27.5	69.9	FL5056SS
20	1.4	12.0	30.5	18.0	45.7	30.0	76.2	
60	4.1	13.1	33.3	19.6	49.8	32.7	83.1	
7	0.5	11.0	28.0	16.5	42.0	27.5	69.9	FL5064SS
20	1.4	12.0	30.5	18.0	45.7	30.0	76.2	
60	4.1	13.1	33.3	19.6	49.8	32.7	83.1	
7	0.5	11.0	28.0	16.5	42.0	27.5	69.9	FL5072SS
20	1.4	12.0	30.5	18.0	45.7	30.0	76.2	
60	4.1	13.1	33.3	19.6	49.8	32.7	83.1	

EXAIR_Cat36_25_FROMINDESIGN.indb 100 12/20/24 3:47 PM

HollowStream™ Cone Nozzles – 1/8 NPT

Model: HL80X5SS
Material: Type 303 Stainless Steel

Model: HL8001SS
Material: Type 303 Stainless Steel

Model: HL8002SS
Material: Type 303 Stainless Steel

Model: HL8003SS
Material: Type 303 Stainless Steel

Model: HL8005SS
Material: Type 303 Stainless Steel

Model: HL8008SS
Material: Type 303 Stainless Steel

Model: HL8010SS
Material: Type 303 Stainless Steel

Compared to EXAIR's Air Atomizing Spray Nozzles the HollowStream will have higher liquid flow rates.

For maximum liquid conservation and spray control visit Air Atomizing Nozzles on page 70.

Model HL80X5SS, HL8001SS, HL8002SS, HL8003SS, HL8005SS, HL8008SS and HL8010SS

EXAIR's 1/8 NPT HollowStream™ Cone Nozzles, with a circular ring spray pattern, are among the most common type of spray nozzles. Hollow cone spray nozzles are applied to solve cooling, cleaning, washing, rinsing and dust suppression applications throughout industry with less liquid than their full cone counterparts. Their design is vaneless, which creates wide open internal features to resist clogging and can work well with liquids containing particulate. They produce a uniform distribution in a hollow cone ring pattern. Their right-angle design is compact and operates up to 250 PSI liquid pressure. They are commonly used with liquids like water, rinse aids or detergents but are also effective with chemicals, pesticides and herbicides. Adjustment of the liquid flow rate is done by varying liquid pressure.

Dimensions Spray Pattern

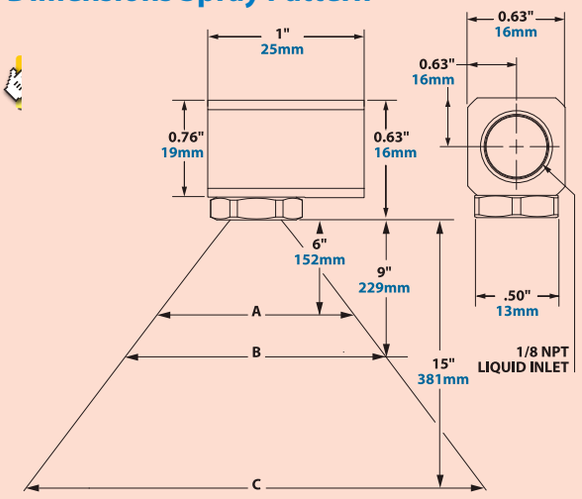

See page 98 for How the OmniStream and HollowStream Cone Nozzles Work.

HollowStream Nozzles rinse off bottles as part of a filling and packaging operation.

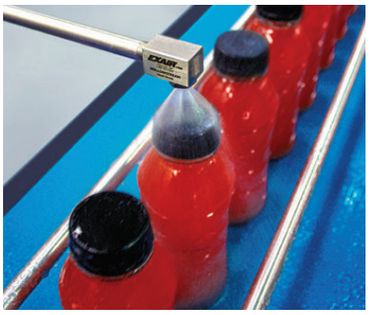

HollowStream Cone Nozzles

Inlet Connection	Model	Capacity	Max Free Passage		Flow Rate GPM/LPM 3 PSI	5 PSI	7 PSI	10 PSI	20 PSI	40 PSI	60 PSI
1/8 NPT	HL80X5SS	5	0.035"	GPM	0.033	0.040	0.046	0.050	0.072	0.100	0.156
				LPM	0.125	0.151	0.174	0.189	0.273	0.379	0.591
	HL8001SS	1	0.063"	GPM	0.067	0.083	0.094	0.100	0.153	0.206	0.239
				LPM	0.254	0.314	0.356	0.379	0.579	0.780	0.905
	HL8002SS	2	0.078"	GPM	0.12	0.15	0.18	0.20	0.25	0.35	0.42
				LPM	0.44	0.57	0.66	0.76	0.93	1.31	1.60
	HL8003SS	3	0.094"	GPM	0.20	0.22	0.26	0.30	0.43	0.61	0.75
				LPM	0.76	0.82	0.98	1.14	1.62	2.32	2.84
	HL8005SS	5	0.125"	GPM	0.25	0.33	0.39	0.48	0.67	0.95	1.18
				LPM	0.95	1.25	1.49	1.82	2.54	3.61	4.46
	HL8008SS	8	0.156"	GPM	0.45	0.55	0.67	0.80	1.18	1.62	1.90
				LPM	1.70	2.08	2.54	3.03	4.47	6.13	7.19
	HL8010SS	10	0.159"	GPM	0.48	0.64	0.79	0.96	1.31	1.85	2.10
				LPM	1.82	2.42	2.99	3.63	4.96	7.00	7.95

Spray Dimensions

Inlet Pressure PSI	Inlet Pressure BAR	Spray Angle Degrees	Width A in	Width A cm	Width B in	Width B cm	Width C in	Width C cm	
7	0.5	X	X	X	X	X	X	X	HL80X5SS
20	1.4	20	0.4	0.9	1.1	2.7	2.1	5.4	
60	4.1	55	1.0	2.6	3.1	7.9	6.2	15.9	
7	0.5	23	X	X	X	X	X	X	HL8001SS
20	1.4	50	0.9	2.4	2.8	7.1	5.6	14.2	
60	4.1	60	1.2	2.9	3.5	8.8	6.9	17.6	
7	0.5	50	0.9	2.4	2.8	7.1	5.6	14.2	HL8002SS
20	1.4	53	1.0	2.5	3.0	7.6	6.0	15.2	
60	4.1	60	1.2	2.9	3.5	8.8	6.9	17.6	
7	0.5	50	0.9	2.4	2.8	7.1	5.6	14.2	HL8003SS
20	1.4	53	1.0	2.5	3.0	7.6	6.0	15.2	
60	4.1	60	1.2	2.9	3.5	8.8	6.9	17.6	
7	0.5	40	0.7	1.8	2.2	5.5	4.4	11.1	HL8005SS
20	1.4	57	1.1	2.8	3.3	8.3	6.5	16.5	
60	4.1	70	1.4	3.6	4.2	10.7	8.4	21.3	
7	0.5	53	1.0	2.5	3.0	7.6	6.0	15.2	HL8008SS
20	1.4	60	1.2	2.9	3.5	8.8	6.9	17.6	
60	4.1	62	1.2	3.1	3.6	9.2	7.2	18.3	
7	0.5	60	1.2	2.9	3.5	8.8	6.9	17.6	HL8010SS
20	1.4	65	1.3	3.2	3.8	9.7	7.6	19.4	
60	4.1	70	1.4	3.6	4.2	10.7	8.4	21.3	

EXAIR_Cat36_25_FROMINDESIGN.indb 101 12/20/24 3:47 PM

Liquid Atomizing Spray Nozzles

HollowStream™ Cone Nozzles – 1/4 NPT



Model: HL1001SS
Material: Type 303 Stainless Steel

Model: HL1002SS
Material: Type 303 Stainless Steel

Model: HL1003SS
Material: Type 303 Stainless Steel

Model: HL1005SS
Material: Type 303 Stainless Steel

Model: HL1008SS
Material: Type 303 Stainless Steel

Model: HL1011SS
Material: Type 303 Stainless Steel

Liquid Nozzles

Model HL1001SS, HL1002SS, HL1003SS, HL1005SS, HL1008SS and HL1011SS

EXAIR's 1/4 NPT HollowStream Cone Nozzles produce a ring of liquid upon your target and are among the most common type of spray nozzles. Hollow cone spray nozzles generally use less liquid than full cone spray nozzles. These nozzles will be used when cooling, cleaning, washing, rinsing and dust suppression can be achieved with less liquid than a full cone nozzle. Their tangential flow design is vaneless which creates wide open internal features to resist clogging. They produce a uniform distribution in a hollow cone round pattern and medium to large droplets. The right-angle design is compact and operates at up to 250 PSI liquid pressure. HollowStream nozzles also work well with liquids containing particulate.

Compared to EXAIR's Air Atomizing Spray Nozzles the HollowStream will have higher liquid flow rates.

For maximum liquid conservation and spray control visit Air Atomizing Nozzles on page 70.

Dimensions and Spray Pattern

DOWNLOAD drawings at EXAIR.com

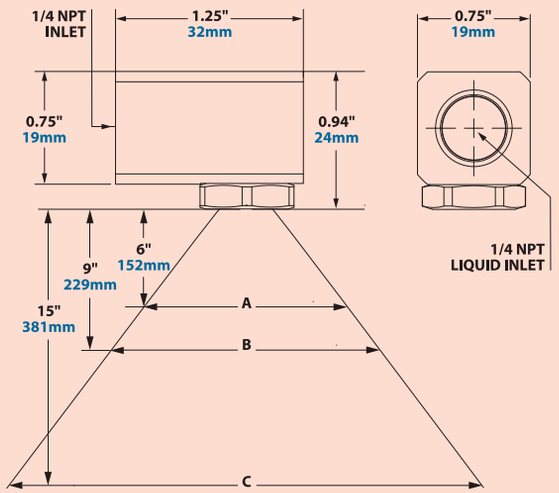

See page 98 for How the OmniStream and HollowStream Cone Nozzles Work.

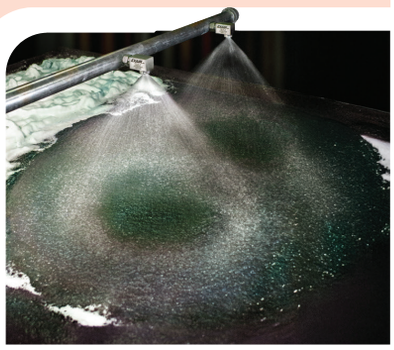

HollowStream Nozzles break and remove foam from a washing basin.

HollowStream Cone Nozzles

Inlet Connection	Model	Capacity	Max Free Passage		Flow Rate GPM/LPM 3 PSI	5 PSI	7 PSI	10 PSI	20 PSI	40 PSI	60 PSI
1/4 NPT	HL1001SS	1	0.052"	GPM	0.06	0.07	0.09	0.10	0.13	0.18	0.21
				LPM	0.23	0.26	0.34	0.38	0.49	0.68	0.79
	HL1002SS	2	0.086"	GPM	0.14	0.17	0.19	0.20	0.27	0.38	0.46
				LPM	0.53	0.64	0.72	0.76	1.02	1.44	1.74
	HL1003SS	3	0.109"	GPM	0.20	0.24	0.28	0.32	0.45	0.63	0.77
				LPM	0.76	0.91	1.06	1.21	1.70	2.38	2.91
	HL1005SS	5	0.120"	GPM	0.27	0.35	0.39	0.49	0.65	0.91	1.12
				LPM	1.02	1.32	1.47	1.85	2.46	3.44	4.23
	HL1008SS	8	0.166"	GPM	0.46	0.59	0.73	0.80	1.16	1.60	2.04
				LPM	1.74	2.23	2.76	3.02	4.38	6.05	7.71
	HL1011SS	11	0.180"	GPM	0.65	0.81	0.93	1.10	1.47	2.03	2.50
				LPM	2.46	3.06	3.52	4.16	5.56	7.67	9.45

Spray Angle

Inlet Pressure PSI	BAR	Width A in	A cm	B in	B cm	C in	C cm	
7	0.5	4.8	12.3	6.1	15.5	7.8	19.8	HL1001SS
20	1.4	7.3	18.5	9.2	23.3	11.7	29.7	
60	4.1	12.1	30.8	15.3	38.8	19.5	49.5	
7	0.5	6.1	15.5	8.6	21.7	11.2	28.4	HL1002SS
20	1.4	9.2	23.3	12.8	32.6	16.8	42.6	
60	4.1	15.3	38.8	21.4	54.4	28.0	71.1	
7	0.5	6.8	17.2	10.4	26.5	13.3	33.9	HL1003SS
20	1.4	10.2	25.9	15.6	39.7	20.0	50.8	
60	4.1	17.0	43.1	26.1	66.2	33.3	84.6	
7	0.5	8.4	21.3	9.7	24.7	14.3	36.3	HL1005SS
20	1.4	12.6	32.0	14.6	37.0	21.5	54.5	
60	4.1	21.0	53.4	24.3	61.7	35.8	90.8	
7	0.5	7.1	18.0	7.8	19.8	10.1	25.6	HL1008SS
20	1.4	10.6	26.9	11.7	29.7	15.1	38.4	
60	4.1	17.7	44.9	19.5	49.5	25.2	63.9	
7	0.5	9.5	24.2	12.0	30.5	14.8	37.6	HL1011SS
20	1.4	14.3	36.4	18.0	45.7	22.2	56.5	
60	4.1	23.9	60.6	30.0	76.2	37.0	94.1	

EXAIR_Cat36_25_FROMINDESIGN.indb 102 12/20/24 3:47 PM

HollowStream™ Cone Nozzles – 3/8 NPT



Model: HL3005SS
Material: Type 303 Stainless Steel

Model: HL3008SS
Material: Type 303 Stainless Steel

Model: HL3010SS
Material: Type 303 Stainless Steel

Model: HL3015SS
Material: Type 303 Stainless Steel

Model: HL3020SS
Material: Type 303 Stainless Steel

Model: HL3025SS
Material: Type 303 Stainless Steel

Model: HL3030SS
Material: Type 303 Stainless Steel

Compared to EXAIR's Air Atomizing Spray Nozzles the HollowStream will have higher liquid flow rates.

For maximum liquid conservation and spray control visit Air Atomizing Nozzles on page 70.

Model HL3005SS, HL3008SS, HL3010SS, HL3015SS, HL3020SS, HL3025SS and HL3030SS

EXAIR's 3/8 NPT HollowStream Cone Nozzles produce a ring of liquid upon your target and are among the most common type of spray nozzles. Hollow cone spray nozzles generally use less liquid than full cone spray nozzles. These nozzles will be used for cooling, cleaning, washing, rinsing and dust suppression with less liquid than a full cone nozzle. Their tangential flow design is vaneless which creates wide open internal features to resist clogging. They produce a uniform distribution in a hollow cone round pattern and medium to large droplets. The right-angle design is compact and operates at up to 250 PSI liquid pressure. HollowStream nozzles work well with liquids containing particulate.

Dimensions Spray Pattern

DOWNLOAD drawings at EXAIR.com

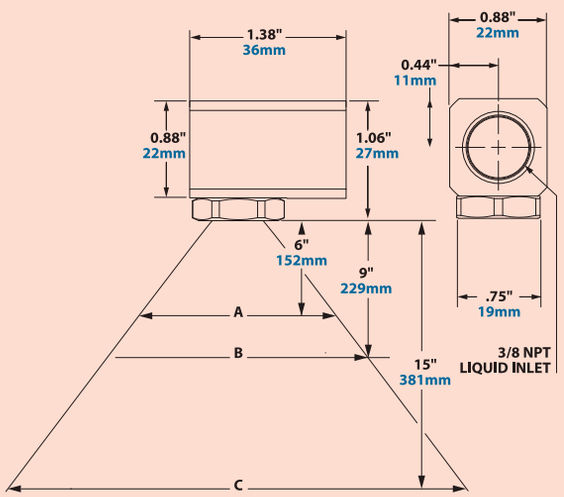

See page 98 for How the OmniStream and HollowStream Cone Nozzles Work.



3/8 NPT HollowStream nozzle lowers emissions inside of a gas scrubber.

HollowStream Cone Nozzles													Spray Angle								
Inlet Connection	Model	Capacity	Max Free Passage	Flow Rate GPM/LPM									Inlet		Width						
													Pressure PSI/BAR		A		B		C		
					3 PSI	5 PSI	7 PSI	10 PSI	20 PSI	30 PSI	40 PSI	60 PSI			in	cm	in	cm	in	cm	
3/8 NPT	HL3005SS	5	0.111"	GPM	0.29	0.34	0.39	0.45	0.62	0.75	0.86	1.04	7	0.5	10.1	25.6	15.1	38.4	25.2	63.9	HL3005SS
													20	1.4	11.0	27.9	16.5	41.9	27.5	69.8	
				LPM	1.11	1.30	1.48	1.71	2.35	2.83	3.25	3.95	60	4.1	11.8	30.0	17.7	44.9	29.5	74.9	
	HL3008SS	8	0.159"	GPM	0.50	0.60	0.71	0.82	1.12	1.33	1.50	1.80	7	0.5	7.5	19.0	11.2	28.6	18.7	47.6	HL3008SS
													20	1.4	8.4	21.3	12.6	32.0	21.0	53.4	
				LPM	1.88	2.28	2.68	3.09	4.25	5.04	5.68	6.80	60	4.1	10.1	25.6	15.1	38.4	25.2	63.9	
	HL3010SS	10	0.172"	GPM	0.64	0.75	0.89	1.01	1.36	1.62	1.83	2.47	7	0.5	8.4	21.3	12.6	32.0	21.0	53.4	HL3010SS
													20	1.4	9.5	24.2	14.3	36.4	23.9	60.6	
				LPM	2.42	2.84	3.36	3.81	5.16	6.13	6.93	9.35	60	4.1	10.4	26.5	15.6	39.7	26.1	66.2	
	HL3015SS	15	0.166"	GPM	0.94	1.10	1.29	1.48	1.98	2.60	2.80	3.60	7	0.5	11.4	28.9	17.1	43.4	28.5	72.3	HL3015SS
													20	1.4	13.1	33.3	19.6	49.9	32.7	83.2	
				LPM	3.54	4.16	4.88	5.60	7.48	9.84	10.60	13.63	60	4.1	13.8	35.1	20.7	52.6	34.5	87.7	
	HL3020SS	20	0.203"	GPM	1.28	1.50	1.81	2.00	2.75	3.39	3.92	4.53	7	0.5	11.4	28.9	17.1	43.4	28.5	72.3	HL3020SS
													20	1.4	12.0	30.5	18.0	45.7	30.0	76.2	
				LPM	4.86	5.69	6.86	7.57	10.41	12.84	14.83	17.13	60	4.1	13.1	33.3	19.6	49.9	32.7	83.2	
	HL3025SS	25	0.219"	GPM	1.45	1.78	2.02	2.45	3.34	4.00	4.52	5.40	7	0.5	10.1	25.6	15.1	38.4	25.2	63.9	HL3025SS
													20	1.4	11.0	27.9	16.5	41.9	27.5	69.8	
				LPM	5.49	6.75	7.63	9.27	12.65	15.14	17.10	20.44	60	4.1	12.0	30.5	18.0	45.7	30.0	76.2	
	HL3030SS	30	0.281"	GPM	1.80	2.30	2.68	3.10	4.23	5.13	6.03	7.28	7	0.5	8.2	20.9	12.4	31.4	20.6	52.4	HL3030SS
													20	1.4	8.7	22.1	13.1	33.2	21.8	55.4	
				LPM	6.81	8.71	10.13	11.73	15.99	19.40	22.81	27.54	60	4.1	10.1	25.6	15.1	38.4	25.2	63.9	

EXAIR_Cat36_25_FROMINDESIGN.indb 103 12/20/24 3:47 PM

Liquid Atomizing Spray Nozzles

HollowStream™ Cone Nozzles – 1/2 NPT



Model: HL5025SS
Material: Type 303 Stainless Steel

Model: HL5030SS
Material: Type 303 Stainless Steel

Model: HL5040SS
Material: Type 303 Stainless Steel

Model: HL5050SS
Material: Type 303 Stainless Steel

Model: HL5060SS
Material: Type 303 Stainless Steel

Liquid Nozzles

Model HL5025SS, HL5030SS, HL5040SS, HL5050SS, HL5060SS
EXAIR's 1/2 NPT HollowStream Cone Nozzles produce a ring of liquid upon your target and are among the most common type of spray nozzles. Hollow cone spray nozzles generally use less liquid than full cone spray nozzles. These nozzles will be used for cooling, cleaning, washing, rinsing and dust suppression with less liquid than a full cone nozzle. Their tangential flow design is vaneless which creates wide open internal features to resist clogging. They produce a uniform distribution in a hollow cone round pattern and medium to large droplets. The right-angle design is compact and operates at up to 250 PSI liquid pressure. HollowStream nozzles work well with liquids containing particulate.

2023 WINNER Environmental Protection NEW PRODUCT OF THE YEAR

Dimensions and Spray Pattern

DOWNLOAD drawings at EXAIR.com

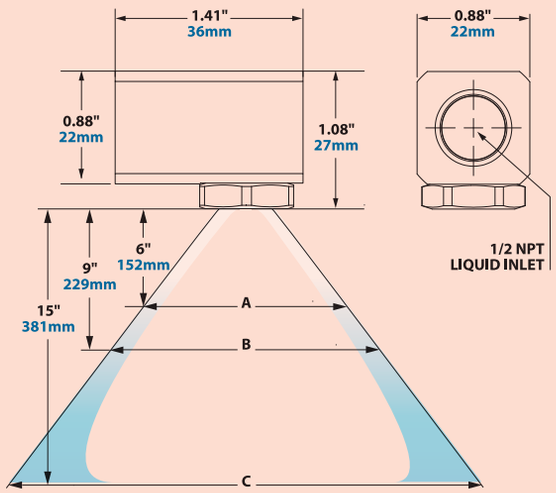

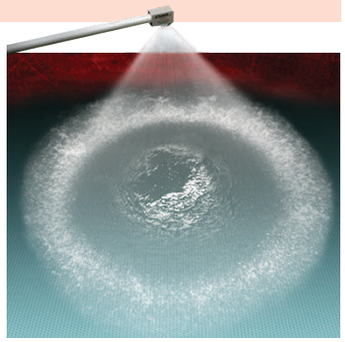

The precision machining of the HollowStream nozzle produces a controlled spray angle in this rinsing operation.

Compared to EXAIR's Air Atomizing Spray Nozzles the HollowStream will have higher liquid flow rates.

For maximum liquid conservation and spray control visit our Air Atomizing Nozzles on page 70.

HollowStream Cone Nozzles

Inlet Connection	Model	Capacity	Max Free Passage		Flow Rate GPM/LPM 3 PSI	5 PSI	7 PSI	10 PSI	20 PSI	30 PSI	40 PSI	60 PSI
1/2 NPT	HL5025SS	25	0.281"	GPM	1.60	1.90	2.40	2.50	3.70	4.40	4.80	6.00
				LPM	6.06	7.19	9.08	9.46	14.01	16.66	18.17	22.71
	HL5030SS	30	0.313"	GPM	1.90	2.20	2.50	3.00	4.20	5.00	5.60	7.00
				LPM	7.19	8.33	9.46	11.36	15.90	18.93	21.20	26.50
	HL5040SS	40	0.344"	GPM	2.40	2.80	3.20	3.90	5.20	6.20	6.80	8.20
				LPM	9.08	10.60	12.11	14.76	19.68	23.47	25.74	31.04
	HL5050SS	50	0.344"	GPM	3.20	3.80	4.60	5.00	6.80	7.90	9.00	12.50
				LPM	12.11	14.38	17.41	18.93	25.74	29.90	34.07	47.32
	HL5060SS	60	0.344"	GPM	3.60	4.20	5.40	6.00	7.80	9.20	11.50	14.00
				LPM	13.63	15.90	20.44	22.71	29.53	34.83	43.53	53.00

Spray Angle

Inlet Pressure PSI	BAR	Width A in	A cm	B in	B cm	C in	C cm	
7	0.5	6.9	17.6	10.4	26.4	17.3	44.0	HL5025SS
20	1.4	7.5	19.0	11.2	28.6	18.7	47.6	
60	4.1	8.4	21.3	12.6	32.0	21.0	53.4	
7	0.5	8.4	21.3	12.6	32.0	21.0	53.4	HL5030SS
20	1.4	9.0	23.0	13.6	34.5	22.6	57.4	
60	4.1	10.1	25.6	15.1	38.4	25.2	63.9	
7	0.5	10.8	27.4	16.2	41.2	27.0	68.6	HL5040SS
20	1.4	12.0	30.5	18.0	45.7	30.0	76.2	
60	4.1	12.9	32.7	19.3	49.0	32.2	81.7	
7	0.5	13.8	35.1	20.7	52.6	34.5	87.7	HL5050SS
20	1.4	14.3	36.3	21.5	54.5	35.8	90.8	
60	4.1	15.4	39.0	23.0	58.5	38.4	97.5	
7	0.5	14.3	36.3	21.5	54.5	35.8	90.8	HL5060SS
20	1.4	17.1	43.5	25.7	65.3	43.8	111.4	
60	4.1	18.5	46.9	27.7	70.4	46.2	117.3	

For Technical Assistance, Call an EXAIR Application Engineer 1-800-903-9247
Toll Free FAX (866) 329-3924 • E-mail: techelp@exair.com • www.exair.com

EXAIR_Cat36_25_FROMINDESIGN.indb 104 12/20/24 3:47 PM

PowerStream™ Liquid Nozzles – 1/8 NPT



Model: DL8025SS
Material: Type 303 Stainless Steel

Model: DL8030SS
Material: Type 303 Stainless Steel

Model: DL8040SS
Material: Type 303 Stainless Steel

Model: DL8050SS
Material: Type 303 Stainless Steel

Model: DL8075SS
Material: Type 303 Stainless Steel

Model DL8025SS, DL8030SS, DL8040SS, DL8050SS, DL8075SS

EXAIR's 1/8 NPT PowerStream Liquid Nozzles provide a superior spraying solution for an extensive range of industrial processes and operates at up to 250 PSI liquid pressure. These processes include, but are not limited to, cooling, rinsing, washing, coating, and dust control. Designed to provide a uniform, deflected flat fan spray pattern, this nozzle ensures efficient liquid distribution that is consistent across the full width of spray. Its clog-resistant design makes it a perfect choice for environments dealing with particulates or potentially viscous fluids. Available in stainless steel, the PowerStream nozzle supports a variety of flow rates, allowing for flexible integration into existing systems, or for use in newly designed builds. Whether you need precise spray control or effective dust suppression, the PowerStream nozzle from EXAIR is engineered to meet your requirements with exceptional performance, repeatability and durability.

Compared to EXAIR's Air Atomizing Spray Nozzles the PowerStream will have higher liquid flow rates.

For maximum liquid conservation and spray control visit our Air Atomizing Nozzles on page 70.

Dimensions and Spray Pattern

DOWNLOAD drawings at EXAIR.com

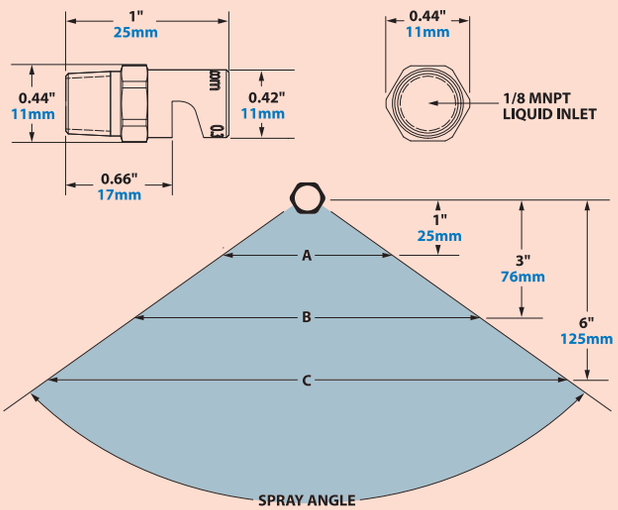

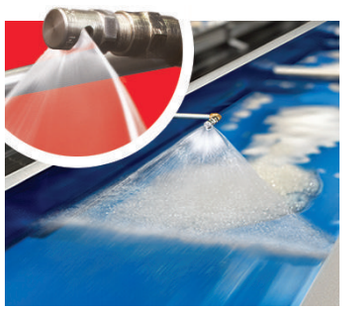

PowerStream Nozzles provide a superior spraying solution for an extensive range of industrial processes.

PowerStream Nozzles

Inlet Connection	Model	Capacity	Max Free Passage		Flow Rate GPM/LPM 3 PSI	5 PSI	7 PSI	10 PSI	20 PSI	40 PSI	60 PSI
1/8 NPT	DL8025SS	2.5	0.055"	GPM	0.15	0.19	0.20	0.24	0.36	0.50	0.64
				LPM	0.57	0.72	0.76	0.91	1.36	1.89	2.42
	DL8030SS	3	0.063"	GPM	0.17	0.22	0.25	0.31	0.45	0.67	0.83
				LPM	0.64	0.83	0.95	1.17	1.70	2.54	3.14
	DL8040SS	4	0.070"	GPM	0.22	0.27	0.33	0.40	0.59	0.86	1.06
				LPM	0.83	1.02	1.25	1.51	2.23	3.26	4.01
	DL8050SS	5	0.079"	GPM	0.27	0.34	0.42	0.50	0.74	1.09	1.32
				LPM	1.02	1.29	1.59	1.89	2.80	4.13	5.00
	DL8075SS	7.5	0.094"	GPM	0.38	0.50	0.61	0.75	1.08	1.51	1.84
				LPM	1.44	1.89	2.31	2.84	4.09	5.72	6.97

Spray Angle

Inlet Pressure PSI/BAR		Spray Angle Degrees	Width A in	A cm	B in	B cm	C in	C cm	
7	0.5	70	1.4	4	4.2	11	8.4	21	DL8025SS
20	1.4	80	1.7	4	5.0	13	10.1	26	
60	4.1	110	2.9	7	8.6	22	17.1	44	
7	0.5	80	1.7	4	5.0	13	10.1	26	DL8030SS
20	1.4	100	2.4	6	7.2	18	14.3	36	
60	4.1	105	2.6	7	7.8	20	15.6	40	
7	0.5	90	2.0	5	6.0	15	12.0	30	DL8040SS
20	1.4	110	2.9	7	8.6	22	17.1	44	
60	4.1	120	3.5	9	10.4	26	20.8	53	
7	0.5	120	3.5	9	10.4	26	20.8	53	DL8050SS
20	1.4	120	3.5	9	10.4	26	20.8	53	
60	4.1	130	4.3	11	12.9	33	25.7	65	
7	0.5	140	5.5	14	16.5	42	33.0	84	DL8075SS
20	1.4	140	5.5	14	16.5	42	33.0	84	
60	4.1	150	7.5	19	22.4	57	44.8	114	

EXAIR_Cat36_25_FROMINDESIGN.indb 105 12/20/24 3:47 PM

BETE® Liquid Atomizing Spray Nozzles

PERFORMANCE SPRAY ENGINEERING



NEW BETE Hydraulic Nozzles

Since 1950, over 30,000,000 BETE nozzles have sprayed in deep sea, deep space, and everywhere in between.

What Makes BETE an Industry Leader in Spray Technology?

A pioneer and innovator in all areas of spray nozzle engineering, manufacturing, and application solutions, BETE improves spray processes worldwide for numerous markets, including food and beverage, petrochemical, chemical, waste management and pollution control. We manufacture tens of thousands of different products, including misting and fogging nozzles, tank cleaning nozzles, chemical injection nozzles, custom spray lances, fabrications and spraying systems. BETE integrates decades of experience in spray design and applications engineering with a CNC machine shop, foundry, and spray lab that enables in-house product design, manufacturing and testing to ensure the highest quality spray technology.

BETE Nozzles

Why is Selecting the Correct Spray Nozzle Important?

Spray nozzles may be relatively small components of large industrial processes, but incorporating the proper nozzles is critical to achieving peak system performance and efficiency. BETE's extensive catalog of hydraulic nozzles includes full cone, hollow cone, fan, misting, fogging, tank cleaning and automatic spray nozzles. These nozzles come in various sizes, connection types, flow rates, spray angles and materials. Whatever your spraying challenge, BETE has an efficient and effective solution to help optimize your process.

Applications

- Cleaning & Washing
- Dust Suppression
- Humidification
- Tank Cleaning
- Cooling
- Gas Conditioning
- Foam Control
- Vacuum Distillation
- Odor Control
- Chemical Injection
- Fire Protection
- Coating & Lubricating
- Moistening
- Flue Gas Desulfurization (FGD)

Advantages

- Expertly Engineered
- Durable Construction
- High Efficiency
- Reliable Performance
- Save Resources
- Innovative Technology
- Optimize Processes
- Ready for Immediate Shipment

All weights and dimensions are approximate. Spray angle performance varies with pressure. Please contact EXAIR for specific data on critical applications.

For Technical Assistance, Call an EXAIR Application Engineer 1-800-903-9247
Toll Free FAX (866) 329-3924 • E-mail: techelp@exair.com • www.exair.com

EXAIR_Cat36_25_FROMINDESIGN.indb 106 12/20/24 3:47 PM

MicroWhirl ® (MW) Misting & Fogging Nozzles



Series: MicroWhirl MW
Connection: 1/8 Male NPT
Spray Angle: 70°
Material: 316 Stainless Steel

MW Models

BETE MicroWhirl† nozzles offer outstanding fine mist or fog with a rugged, pinless design that ensures drip-free performance. They include a 70-micron polypropylene filter. A 200-mesh 316 Stainless Steel filter option is available as an alternative. A safety wire hole is also available for added security. The nozzle operates with a minimum pressure of 100 PSI (7 BAR) and delivers versatile spray performance, producing mist at lower pressures and fog at higher pressures. Droplets are typically small enough that buoyancy is significant compared to gravity, allowing drops to appear to float. In actuality, particles fall very slowly in the absence of upward airflow.

† Patent #7198201

Dimensions

DOWNLOAD drawings at EXAIR.com

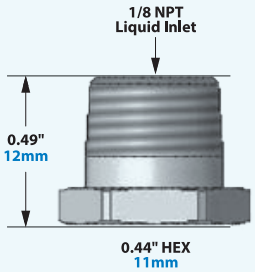

How Swirl Misting Nozzles Work

BETE engineers patented the whirl fine misting nozzle in 2002. Misting and fogging spray nozzles traditionally use either an impingement or air-atomizing design to produce small droplets. Alternatively, whirl misting nozzles convert the fluid's head pressure into kinetic energy within a swirl chamber. The discharged fluid breaks up the droplets from the centrifugal force. MicroWhirl nozzles utilize a vortex to create a fine mist, increasing reliability and performance compared with traditional methods.

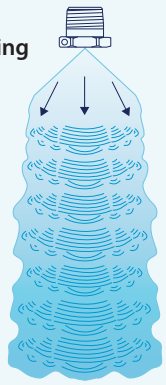

BETE Nozzles

Customers trust BETE's MicroWhirl misting nozzles for the finest hydraulic atomization, especially under critical conditions.

Ideal for cooling, humidification and complete evaporation.

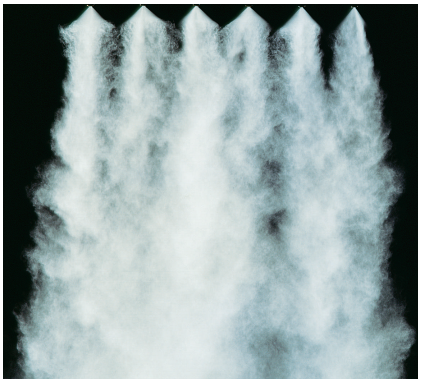

MicroWhirl misting nozzles produce outstanding atomization for humidification, air inlet cooling, dust suppression and more.

MicroWhirl Flow Rates and Dimensions

Pattern: Misting/ Fogging **Spray Angle:** 70° **Connection:** 1/8 Male NPT **Material:** 316 SS

Male Inlet Connection	Model	K Factor	Flow Rate (GPM @ PSI) 100 PSI	300 PSI	600 PSI	1000 PSI	1500 PSI	2000 PSI	2500 PSI	3000 PSI	Wt (oz)
1/8 NPT	6094622	0.00085	0.009	0.015	0.021	0.027	0.033	0.038	0.043	0.047	0.25
	6109975	0.00275	0.028	0.048	0.067	0.087	0.107	0.123	0.138	0.151	
	6149734	0.00693	0.069	0.120	0.170	0.219	0.268	0.310	0.347	0.380	

Flow Rate GPM = K $\sqrt{PSI}$

MicroWhirl Flow Rates and Dimensions

Pattern: Misting/ Fogging **Spray Angle:** 70° **Connection:** 1/8 Male NPT **Material:** 316 SS

Male Inlet Connection	Model	K Factor	Flow Rate (L/min @ BAR) 7 BAR	20 BAR	40 BAR	70 BAR	100 BAR	140 BAR	170 BAR	200 BAR	Wt (g)
1/8 NPT	6094622	0.01220	0.032	0.055	0.077	0.102	0.122	0.145	0.160	0.173	7.09
	6109975	0.03960	0.105	0.177	0.251	0.332	0.396	0.469	0.517	0.560	
	6149734	0.09988	0.264	0.447	0.632	0.836	0.999	1.182	1.302	1.413	

Flow Rate L/min = K $\sqrt{BAR}$

EXC36_6Spraynozzles.indd 107 1/29/25 3:02 PM

Flat Fan Nozzles

NF Standard Fan Nozzles



Series: NF
Connections: 1/8 - 3/8 Male NPT
Spray Angles: 30°, 65°, 80°, 120°
Material: Brass

NF Models

The NF fan spray nozzle provides high-impact spray with evenly tapered edges, enabling effective overlapping of sprays for complete coverage. With a durable, one-piece construction and no internal parts, this nozzle is reliable and easy to maintain. Available in various male connection sizes, flow rates, and spray angles, the NF nozzle is the ideal solution for numerous industrial applications including coating, conveyor cleaning, and parts washing. NF flat spray nozzles produce medium to large-sized droplets that form a thin, sheet-like spray pattern.

The flat spray pattern optimizes a wide range of applications including surface cleaning, coating, high-impact washing and foam control.

BETE Nozzles

Dimensions and Spray Pattern

DOWNLOAD drawings at EXAIR.com

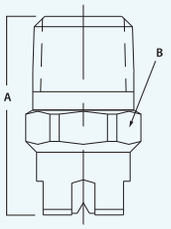



How Flat Fan Nozzles Work

As the fluid exits the nozzle's elliptical orifice, it is forced into a thin, flat sheet of fluid, producing a fan-like spray pattern.

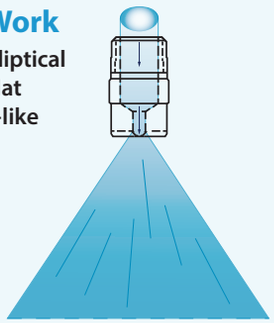

NF Flow Rates

Pattern: Fan **Spray Angles:** 30°, 65°, 80° and 120° **Connection:** 1/8-3/8 Male NPT **Material:** Brass

Male Inlet Connection	Spray angle				K Factor	Flow Rates (GPM @ PSI)									Equiv Orifice Dia (in)"
	30°	65°	80°	120°		5 PSI	10 PSI	15 PSI	20 PSI	30 PSI	40 PSI	60 PSI	80 PSI	100 PSI	
1/8 NPT Model	6011359	6017030	6003573	6013268	0.0791	0.18	0.25	0.31	0.35	0.43	**0.50**	0.61	0.71	0.79	0.057
	6011652	6011842	6006147	6013456	0.158	0.35	0.50	0.61	0.71	0.87	**1.00**	1.22	1.41	1.58	0.080
	6013109	6011261	6007832	6003609	0.316	0.71	1.00	1.22	1.41	1.73	**2.00**	2.45	2.83	3.16	0.109
	6013470	6011672	6008463	6003944	0.474	1.06	1.50	1.84	2.12	2.60	**3.00**	3.67	4.24	4.74	0.141
1/4 NPT Model	6039856	6044390	6020398	6027632	0.0791	0.18	0.25	0.31	0.35	0.43	**0.50**	0.61	0.71	0.79	0.057
	6003572	6005653	6009320	6006482	0.158	0.35	0.50	0.61	0.71	0.87	**1.00**	1.22	1.41	1.58	0.080
	6020542	6003868	6009566	6005313	0.316	0.71	1.00	1.22	1.41	1.73	**2.00**	2.45	2.83	3.16	0.109
	6013112	6008836	6005921	6003113	0.474	1.06	1.50	1.84	2.12	2.60	**3.00**	3.67	4.24	4.74	0.141
	6004735	6010893	6009858	6014763	0.632	1.41	2.00	2.45	2.83	3.46	**4.00**	4.90	5.66	6.32	0.156
	6013265	6014774	6004072	6010699	0.791	1.77	2.50	3.06	3.54	4.33	**5.00**	6.12	7.07	7.91	0.172
3/8 NPT Model	6008562	6007564	6008688	6011539	0.316	0.71	1.00	1.22	1.41	1.73	**2.00**	2.45	2.83	3.16	0.109
	6008312	6008326	6008706	6011280	0.474	1.06	1.50	1.84	2.12	2.60	**3.00**	3.67	4.24	4.74	0.141
	6008702	6002612	6003828	6011675	0.632	1.41	2.00	2.45	2.83	3.46	**4.00**	4.90	5.66	6.32	0.156
	6004093	6010885	6015429	6008709	0.791	1.77	2.50	3.06	3.54	4.33	**5.00**	6.12	7.07	7.91	0.172

Dimensions for Metal Only (in)

Pipe Size	A	B	Wt (oz)Metal
1/8"	0.88	0.44	1.00
1/4"	1.06	0.56	1.50
3/8"	1.25	0.69	2.00

Flow Rate GPM = $K\sqrt{PSI}$

NF Flow Rates

Pattern: Fan **Spray Angles:** 30°, 65°, 80° and 120° **Connection:** 1/8-3/8 Male NPT **Material:** Brass

Male Inlet Connection	Spray angle				K Factor	Flow Rates (L/min @ BAR)						Equiv Orifice Dia (mm)
	30°	65°	80°	120°		0.5 BAR	0.7 BAR	1 BAR	2 BAR	3 BAR	5 BAR	
1/8 NPT Model	6011359	6017030	6003573	6013268	1.14	0.81	0.95	1.14	1.61	**1.97**	2.55	1.45
	6011652	6011842	6006147	6013456	2.28	1.61	1.91	2.28	3.22	**3.95**	5.10	2.03
	6013109	6011261	6007832	6003609	4.56	3.22	3.81	4.56	6.45	**7.89**	10.2	2.78
	6013470	6011672	6008463	6003944	6.84	4.83	5.72	6.84	9.67	**11.8**	15.3	3.57
1/4 NPT Model	6039856	6044390	6020398	6027632	1.14	0.81	0.95	1.14	1.61	**1.97**	2.55	1.45
	6003572	6005653	6009320	6006482	2.28	1.61	1.91	2.28	3.22	**3.95**	5.10	2.03
	6020542	6003868	6009566	6005313	4.56	3.22	3.81	4.56	6.45	**7.89**	10.2	2.78
	6013112	6008836	6005921	6003113	6.84	4.83	5.72	6.84	9.67	**11.8**	15.3	3.57
	6004735	6010893	6009858	6014763	9.12	6.45	7.63	9.12	12.9	**15.8**	20.4	3.97
	6013265	6014774	6004072	6010699	11.4	8.06	9.53	11.4	16.1	**19.7**	25.5	4.37
3/8 NPT Model	6008562	6007564	6008688	6011539	4.56	**3.22**	**3.81**	**4.56**	**6.45**	**7.89**	**1 0.2**	**2.78**
	6008312	6008326	6008706	6011280	6.84	**4.83**	**5.72**	**6.84**	**9.67**	**11.8**	**15.3**	**3.57**
	6008702	6002612	6003828	6011675	9.12	**6.45**	**7.63**	**9.12**	**12.9**	**15.8**	**20.4**	**3.97**
	6004093	6010885	6015429	6008709	11.4	**8.06**	**9.53**	**11.4**	**16.1**	**19.7**	**25.5**	**4.37**

Dimensions for Metal Only (mm)

Pipe Size	A	B	Wt (g) Metal
1/8"	22.2	11.1	28.4
1/4"	27.0	14.3	42.5
3/8"	31.8	17.5	56.7

Flow Rate L/min = $K\sqrt{BAR}$

For Technical Assistance, Call an EXAIR Application Engineer 1-800-903-9247
Toll Free FAX (866) 329-3924 • E-mail: techelp@exair.com • www.exair.com

EXAIR_Cat36_25_FROMINDESIGN.indb 108 12/20/24 3:47 PM

TF Full Cone Spray Nozzles



Series: TF
Connections: 1/4 - 1 Male NPT
Spray Angles: 60°, 90°, 120°
Material: Brass

TF Models

BETE is the original inventor of the spiral, also known as a pigtail, corkscrew, or helix nozzle. Its durable, one-piece design with no internal parts delivers clog-resistant performance and high energy efficiency. When compared to whirl-type nozzles of the same flow rate, pressure drop, and angle, TF spirals produce considerably smaller droplet sizes for fine atomization.

Dimensions and Spray Pattern

DOWNLOAD drawings at EXAIR.com

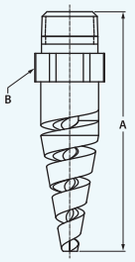

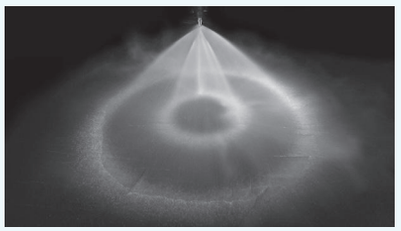

90°, 120°, 60° nozzles are slightly longer. For dimensions, contact EXAIR.

How Full Cone Spirals Work

The spiral nozzle pattern is created by fluid shearing along the spiral's turns, creating multiple concentric hollow cones. This design produces two to three bands of coarser droplets, each surrounded by wider bands of finer droplets, resulting in full coverage.



BETE Nozzles

Numerous industries rely on BETE TF full cone spray nozzles for their gas cooling, quenching or chemical injection applications.

Its durable, one-piece design is clog resistant and requires minimal maintenance.

TF Full Cone Flow Rates and Dimensions

Pattern: Full Cone **Spray Angles:** 60°, 90°, 120° **Connection:** 1/4 - 1 Male NPT **Material:** Brass

Male Inlet Connection	Available Spray Angles			K Factor	Flow Rate (GPM @ PSI)									Approx Orifice Dia (in)	Approx Free Passage Dia (in)	A	B	Wt (oz) Metal
	60°	90°	120°		5 PSI	10 PSI	20 PSI	30 PSI	40 PSI	50 PSI	60 PSI	80 PSI	100 PSI					
1/4 NPT Model	6015283	6013583	6013407	0.221	0.495	0.70	0.99	1.21	**1.40**	1.57	1.71	1.98	2.21	0.09	0.09	1.88	0.56	1.25
	6009295	6003058	6016084	0.411	0.919	1.30	1.84	2.25	**2.60**	2.91	3.18	3.68	4.11	0.13	0.13			
	6005350	6013392	6010125	0.632	1.41	2.00	2.83	3.46	**4.00**	4.47	4.90	5.66	6.32	0.16	0.13			
3/8 NPT Model	6011546	6012770	6012736	0.949	2.12	3.00	4.24	5.20	**6.00**	6.71	7.35	8.49	9.49	0.19	0.13	1.88	0.69	1.63
	6015134	6010116	6012832	1.28	2.86	4.05	5.73	7.01	**8.10**	9.06	9.92	11.5	12.8	0.22				
	6006217	6012073	6005617	1.68	3.75	5.30	7.50	9.18	**10.6**	11.9	13.0	15.0	16.8	0.25				
	6009079	6011877	6003941	2.61	5.83	8.25	11.7	14.3	**16.5**	18.4	20.2	23.3	26.1	0.31				
1/2 NPT Model	6007586	6013307	6007059	3.81	8.52	12.1	17	20.9	**24.1**	26.9	29.5	34.1	38.1	0.38	0.19	2.5	0.88	3.00
	6002504	6005485	6016180	5.22	11.7	16.5	23.3	28.6	**33.0**	36.9	40.4	46.7	52.2	0.44				
3/4 NPT Model	6003090	6010373	6013110	6.64	14.8	21.0	29.7	36.4	**42.0**	47.0	51.4	59.4	66.4	0.50	0.19	2.75	1.13	5.50
1 NPT Model	6012340	6016360	6016286	10.6	23.7	33.5	47.4	58.0	**67.0**	74.9	82.1	94.8	106	0.63	0.25	3.63	1.38	8.50

Flow Rate GPM = K $\sqrt{PSI}$

TF Full Cone Flow Rates and Dimensions

Pattern: Full Cone **Spray Angles:** 60°, 90°, 120° **Connection:** 1/4 - 1 Male NPT **Material:** Brass

Male Inlet Connection	Available Spray Angles			K Factor	Flow Rate (L/min @ BAR)						Approx Orifice Dia (mm)	Approx Free Passage Dia (mm)	A	B	Wt (g) Metal
	60°	90°	120°		0.5 BAR	0.7 BAR	1 BAR	2 BAR	3 BAR	5 BAR					
1/4 NPT Model	6015283	6013583	6013407	3.19	2.26	2.67	3.19	4.50	**5.50**	7.10	2.38	2.38	47.6	14.3	35.0
	6009295	6003058	6016084	5.93	4.19	4.96	5.93	8.4	**10.3**	13.2	3.18	3.18			
	6005350	6013392	6010125	9.12	6.45	7.63	9.12	12.9	**15.8**	20.4	3.97	3.18			
3/8 NPT Model	6011546	6012770	6012736	13.7	9.67	11.4	13.7	19.3	**23.7**	30.6	4.76	3.18	47.6	17.5	46.0
	6015134	6010116	6012832	18.5	13.1	15.4	18.5	26.1	**32.0**	41.3	5.56				
	6006217	6012073	6005617	24.2	17.1	20.2	24.2	34.2	**41.8**	54.0	6.35				
	6009079	6011877	6003941	37.6	26.6	31.5	37.6	53.2	**65.1**	84.1	7.94				
1/2 NPT Model	6007586	6013307	6007059	54.9	38.8	46.0	54.9	77.7	**95.1**	123	9.53	4.76	63.5	22.2	85.0
	6002504	6005485	6016180	75.2	53.2	62.9	75.2	106	**130**	168	11.1				
3/4 NPT Model	6003090	6010373	6013110	95.7	67.7	80.1	95.7	135	**166**	214	12.7	4.76	69.9	28.6	156
1 NPT Model	6012340	6016360	6016286	153	108	128	153	216	**264**	341	15.9	6.35	92.1	34.9	241

Flow Rate L/min = K $\sqrt{BAR}$

EXAIR_Cat36_25_FROMINDESIGN.indb 109 12/20/24 3:47 PM

Full Cone Nozzles

MaxiPass® (MP) Maximum Free Passage Nozzles



Series: MaxiPass (MP)
Connections: 3/8 - 3/4 Male NPT
Spray Angles: 60°, 90°, 120°
Materials: 316 Stainless Steel
Polypropylene available for specific models (90°, 120° Only)

MP Models

The patented† MaxiPass design features maximum free passage for ultimate clog resistance compared to other whirl-type nozzles. This ensures high energy efficiency and reliable performance, even with dirty or lumpy liquids. Unlike conventional X-vane nozzles, the MP is engineered with two unique S-shaped internal vanes to maximize free passage, making this nozzle highly dependable under even the most challenging conditions. MP nozzles achieve atomization by swirling the water internally through its vanes before exiting through the orifice, producing medium to coarse droplet sizes. Its spray pattern is more uniform than that of spiral nozzles, providing consistent coverage across applications.

† Patent #4014470

Dimensions and Spray Pattern

DOWNLOAD drawings at EXAIR.com

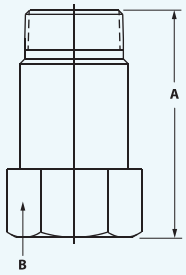

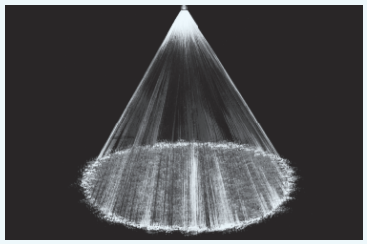

How Full Cone Nozzles Work

The full cone axial spray nozzle with internal vanes produces a uniform conical spray pattern with complete coverage. As the liquid passes through the vanes, it is stabilized and evenly distributed before exiting the nozzle's orifice.

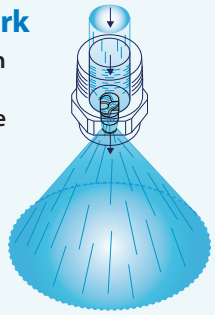

The MP is the leading spray solution for process critical applications such as gas scrubbing, cooling, foam control and vacuum distillation.

Alloy MP nozzles are cast in BETE's U.S. foundry, ensuring high-quality, durable construction.

MaxiPass Flow Rates and Dimensions

Pattern: Full Cone **Spray Angles:** 60°, 90°, 120° **Connection:** 3/8, 1/2, 3/4 NPT **Material:** 316 SS, Polypropylene (Specific 90°, 120° Models Only)

Male Inlet Connection	Material	Available Spray Angles			K Factor	Flow Rate (GPM @ PSI)								Approx Free Passage Dia (in)	Approx Dim (in) Overall Length (Max)			B	Wt (lbs) Metal	Wt (lbs) Polypro
		60°	90°	120°		3 PSI	5 PSI	7 PSI	10 PSI	15 PSI	20 PSI	30 PSI	40 PSI		A (60°)	A (90°)	A (120°)			
3/8 NPT Model	Polypropylene	--	6182995	6186144	0.416	0.70	0.89	1.04	1.23	1.49	**1.70**	2.06	2.35	0.125	1.50	1.50	1.50	0.88	0.19	.017
	316SS	6003212	6002739	6011935	0.661	1.11	1.41	1.65	1.95	2.36	**2.70**	3.27	3.74	0.156						
3/8 NPT Model	Polypropylene	--	6174330	6181241	0.954	1.60	2.03	2.38	2.82	3.41	**3.90**	4.72	5.40	0.188	1.88	1.88	1.88	1.00	0.28	.023
	316SS	6008635	6011682	6016565	1.71	2.87	3.65	4.27	5.05	6.11	**7.00**	8.47	9.70	0.250					0.25	
3/4 NPT Model	316SS	6009757	6008929	6016672	2.54	4.26	5.42	6.35	7.51	9.08	**10.4**	12.6	14.4	0.312	2.50	2.50	2.50	1.25	0.50	.246
		6014786	6008945	6010643	3.67	6.15	7.82	9.16	10.8	13.1	**15.0**	18.1	20.8	0.375					0.44	

Flow Rate GPM = K (PSI) 0.47

MaxiPass Flow Rates and Dimensions

Pattern: Full Cone **Spray Angles:** 60°, 90°, 120° **Connection:** 3/8, 1/2, 3/4 NPT **Material:** 316 SS, Polypropylene (Specific 90°, 120° Models Only)

Male Inlet Connection	Material	Available Spray Angles			K Factor	Flow Rate (L/min @BAR)							Approx Free Passage Dia (mm)	Approx Dim (mm) Overall Length (Max)			B	Wt (kg) Metal	Wt (kg) Polypro
		60°	90°	120°		0.2 BAR	0.3 BAR	0.5 BAR	0.7 BAR	1 BAR	2 BAR			A (60°)	A (90°)	A (120°)			
3/8 NPT Model	Polypropylene	--	6182995	6186144	5.53	2.6	3.14	3.99	4.68	**5.53**	7.66		3.18	38.1	38.1	38.1	22.2	0.09	.008
	316SS	6003212	6002739	6011935	8.79	4.13	4.99	6.35	7.43	**8.79**	12.2		3.97						
3/8 NPT Model	Polypropylene	--	6174330	6181241	12.7	5.96	7.21	9.17	10.7	**12.7**	17.6		4.76	47.6	47.6	47.6	25.4	0.13	.010
	316SS	6008635	6011682	6016565	22.7	10.7	12.9	16.4	19.2	**22.7**	31.4		6.35					0.11	
3/4 NPT Model	316SS	6009757	6008929	6016672	33.8	15.9	19.2	24.4	28.6	**33.8**	46.8		7.94	63.5	60.3	63.5	31.8	0.23	.112
		6014786	6008945	6010643	48.8	22.9	27.7	35.2	41.3	**48.8**	67.6		9.53					0.20	

Flow Rate L/min = K (BAR) 0.47

For Technical Assistance, Call an EXAIR Application Engineer 1-800-903-9247
Toll Free FAX (866) 329-3924 • E-mail: techelp@exair.com • www.exair.com

EXC36_6Spraynozzles.indd 110 1/29/25 3:00 PM

WL Full Cone Nozzle



Series: WL
Connections: 1/8 - 3/8 Male NPT
Spray Angles: 60° (3/8 NPT only), 90°, 120°
Material: Brass

WL Models

BETE's WL spray nozzle uses a whirl plate design to ensure uniform coverage at a low flow rate. Atomization occurs as water is spun within the nozzle before exiting through the orifice, producing medium to coarse droplets. This design produces a more uniform spray pattern compared to spiral nozzles, making it ideal for applications that demand consistent and precise coverage. These applications include washing, cooling, distribution and foam control.

Dimensions and Spray Pattern

DOWNLOAD drawings at EXAIR.com

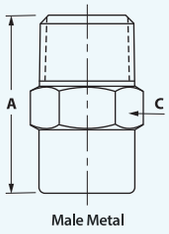

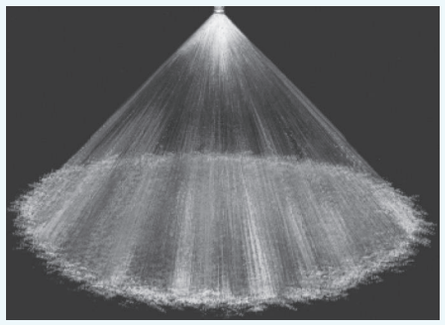

How Full Cone Nozzles Work

The full cone axial spray nozzle with internal vanes produces a uniform conical spray pattern with complete coverage. As the liquid passes through the vanes, it is stabilized and evenly distributed before exiting the nozzle's orifice.

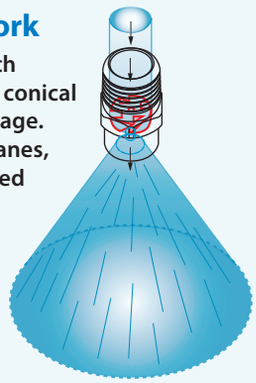

BETE Nozzles

Great for lower flow applications requiring medium to coarse spray atomization and uniform coverage.

For higher flow rates, please see the MaxiPass® full cone nozzle on page 110.

WL Flow Rates and Dimensions

Pattern: Full Cone **Spray Angles:** 60°, 90°, 120° **Connection:** 1/8- 3/8 Male NPT **Material:** Brass

Male Inlet Connection	Available Spray Angles			K Factor	Flow Rate (GPM @ PSI)						
	60°	90°	120°		10 PSI	20 PSI	30 PSI	40 PSI	60 PSI	80 PSI	100 PSI
1/8 NPT Model	--	6006349	6002104	0.044	0.13	0.18	0.22	**0.25**	0.30	0.35	0.38
	--	6004759	6005880	0.088	0.26	0.36	0.44	**0.50**	0.60	0.69	0.77
	--	6014113	6006821	0.132	0.39	0.54	0.66	**0.75**	0.91	1.04	1.15
1/4 NPT Model	--	6000279	6009470	0.177	0.52	0.72	0.87	**1.00**	1.21	1.39	1.54
	--	6000516	6004357	0.265	0.78	1.08	1.31	**1.50**	1.81	2.08	2.31
3/8 NPT Model	--	6016721	6014032	0.353	1.04	1.44	1.75	**2.00**	2.42	2.77	3.08
	6019124	6012173	6008750	0.530	1.56	2.17	2.62	**3.00**	3.63	4.16	4.61
	6036152	6011559	6001862	0.706	2.08	2.89	3.49	**4.00**	4.84	5.54	6.15

Dimensions for Metal Only (in)

Approx Orifice Dia (in)	A	C	Wt (oz) Metal
0.043	0.88	0.44	1.00
0.055			
0.072			
0.082	1.06	0.56	1.50
0.109			
0.125	1.25	0.69	2.00
0.156			
0.188			

Flow Rate GPM = K (PSI) 0.47

WL Flow Rates and Dimensions

Pattern: Full Cone **Spray Angles:** 60°, 90°, 120° **Connection:** 1/8- 3/8 Male NPT **Material:** Brass

Male Inlet Connection	Available Angles			K Factor	Flow Rate (L/min @ BAR)					
	60°	90°	120°		0.7 BAR	1 BAR	2 BAR	3 BAR	5 BAR	10 BAR
1/8 NPT Model	--	6006349	6002104	0.587	0.497	0.587	0.814	**0.984**	1.25	1.73
	--	6004759	6005880	1.17	0.993	1.17	1.63	**1.97**	2.50	3.47
	--	6014113	6006821	1.76	1.49	1.76	2.44	**2.95**	3.75	5.20
1/4 NPT Model	--	6000279	6009470	2.35	1.99	2.35	3.25	**3.94**	5.01	6.93
	--	6000516	6004357	3.52	2.98	3.52	4.88	**5.91**	7.51	10.4
3/8 NPT Model	--	6016721	6014032	4.70	3.97	4.70	6.51	**7.87**	10.0	13.9
	6019124	6012173	6008750	7.05	5.96	7.05	9.76	**11.8**	15.0	20.8
	6036152	6011559	6001862	9.40	7.95	9.40	13.0	**15.7**	20.0	27.7

Dimensions for Metal Only (mm)

Approx Orifice Dia (mm)	A	C	Wt (g) Metal
1.09	22.2	11.1	28.4
1.40			
1.83			
2.08	27.0	14.2	45.5
2.77			
3.18	31.8	17.5	56.7
3.96			
4.78			

Flow Rate L/min = K (BAR) 0.47

EXAIR_Cat36_25_FROMINDESIGN.indb 111 12/20/24 3:47 PM

Full Cone Nozzles

MaxiPass® (MP) Maximum Free Passage Nozzles



Series: MaxiPass (MP)
Connections: 3/8 - 3/4 Male NPT
Spray Angles: 60°, 90°, 120°
Materials: 316 Stainless Steel
Polypropylene available for specific models (90°, 120° Only)

MP Models

The patented† MaxiPass design features maximum free passage for ultimate clog resistance compared to other whirl-type nozzles. This ensures high energy efficiency and reliable performance, even with dirty or lumpy liquids. Unlike conventional X-vane nozzles, the MP is engineered with two unique S-shaped internal vanes to maximize free passage, making this nozzle highly dependable under even the most challenging conditions. MP nozzles achieve atomization by swirling the water internally through its vanes before exiting through the orifice, producing medium to coarse droplet sizes. Its spray pattern is more uniform than that of spiral nozzles, providing consistent coverage across applications.

† Patent #4014470

Dimensions and Spray Pattern

DOWNLOAD drawings at EXAIR.com

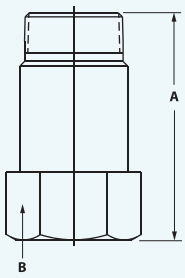

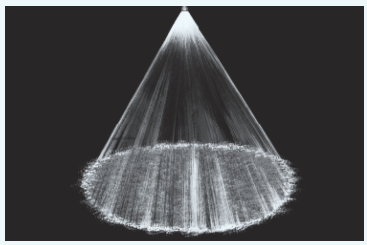

How Full Cone Nozzles Work

The full cone axial spray nozzle with internal vanes produces a uniform conical spray pattern with complete coverage. As the liquid passes through the vanes, it is stabilized and evenly distributed before exiting the nozzle's orifice.

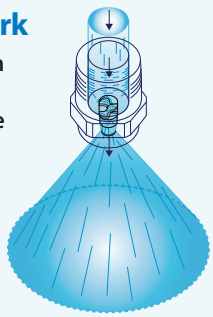

BETE Nozzles

The MP is the leading spray solution for process critical applications such as gas scrubbing, cooling, foam control and vacuum distillation.

Alloy MP nozzles are cast in BETE's U.S. foundry, ensuring high-quality, durable construction.

MaxiPass Flow Rates and Dimensions

Pattern: Full Cone **Spray Angles:** 60°, 90°, 120° **Connection:** 3/8, 1/2, 3/4 NPT **Material:** 316 SS, Polypropylene (Specific 90°, 120° Models Only)

Male Inlet Connection	Material	Available Spray Angles			K Factor	Flow Rate (GPM @ PSI)								Approx Free Passage Dia (in)	Approx Dim (in) Overall Length (Max)			B	Wt (lbs) Metal	Wt (lbs) Polypro
		60°	90°	120°		3 PSI	5 PSI	7 PSI	10 PSI	15 PSI	20 PSI	30 PSI	40 PSI		A (60°)	A (90°)	A (120°)			
3/8 NPT Model	Polypropylene	--	6182995	6186144	0.416	0.70	0.89	1.04	1.23	1.49	**1.70**	2.06	2.35	0.125	1.50	1.50	1.50	0.88	0.19	.017
	316SS	6003212	6002739	6011935	0.661	1.11	1.41	1.65	1.95	2.36	**2.70**	3.27	3.74	0.156						
1/2 NPT Model	Polypropylene	--	6164563	6185953	0.954	1.60	2.03	2.38	2.82	3.41	**3.90**	4.72	5.40	0.188	1.88	1.88	1.88	1.00	0.28	.023
	316SS	6006652	6014543	6015833	1.71	2.87	3.65	4.27	5.05	6.11	**7.00**	8.47	9.70	0.250					0.25	
3/4 NPT Model	316SS	6009757	6008929	6016672	2.54	4.26	5.42	6.35	7.51	9.08	**10.4**	12.6	14.4	0.312	2.50	2.50	2.50	1.25	0.50	.246
		6014786	6008945	6010643	3.67	6.15	7.82	9.16	10.8	13.1	**15.0**	18.1	20.8	0.375					0.44	

Flow Rate GPM = K (PSI) 0.47

MaxiPass Flow Rates and Dimensions

Pattern: Full Cone **Spray Angles:** 60°, 90°, 120° **Connection:** 3/8, 1/2, 3/4 NPT **Material:** 316 SS, Polypropylene (Specific 90°, 120° Models Only)

Male Inlet Connection	Material	Available Spray Angles			K Factor	Flow Rate (L/min @BAR)						Approx Free Passage Dia (mm)	Approx Dim (mm) Overall Length (Max)			B	Wt (kg) Metal	Wt (kg) Polypro
		60°	90°	120°		0.2 BAR	0.3 BAR	0.5 BAR	0.7 BAR	1 BAR	2 BAR		A (60°)	A (90°)	A (120°)			
3/8 NPT Model	Polypropylene	--	6182995	6186144	5.53	2.6	3.14	3.99	4.68	**5.53**	7.66	3.18	38.1	38.1	38.1	22.2	0.09	.008
	316SS	6003212	6002739	6011935	8.79	4.13	4.99	6.35	7.43	**8.79**	12.2	3.97						
1/2 NPT Model	Polypropylene	--	6164563	6185953	12.7	5.96	7.21	9.17	10.7	**12.7**	17.6	4.76	47.6	47.6	47.6	25.4	0.13	.010
	316SS	6006652	6014543	6015833	22.7	10.7	12.9	16.4	19.2	**22.7**	31.4	6.35					0.11	
3/4 NPT Model	316SS	6009757	6008929	6016672	33.8	15.9	19.2	24.4	28.6	**33.8**	46.8	7.94	63.5	60.3	63.5	31.8	0.23	.112
		6014786	6008945	6010643	48.8	22.9	27.7	35.2	41.3	**48.8**	67.6	9.53					0.20	

Flow Rate L/min = K (BAR) 0.47

For Technical Assistance, Call an EXAIR Application Engineer 1-800-903-9247
Toll Free FAX (866) 329-3924 • E-mail: techelp@exair.com • www.exair.com

HydroWhirl® Stinger (HWS2) & HydroWhirl® Mini (HWM)



Series: HydroWhirl Stinger (HWS)
Materials: 316L Stainless Steel, Ceramic Bearings



Series: HydroWhirl Mini (HWM)
Materials: 316L Stainless Steel, PEEK Slide-Bearing

HWS Models

This compact, rotating tank cleaning nozzle is made from FDA-compliant 316L Stainless Steel and has a 32 Ra surface finish, making it ideal for many sanitary applications. The HWS2's patent-pending, no-weld design features Zirconia ceramic bearings for extended service life and extreme chemical resistance. Suitable for small to medium-sized tanks, it produces vigorous spray action with complete 360° spray coverage.

HWM Models

A fluid-driven, self-flushing compact rotary tank cleaning nozzle made from FDA-compliant 316L Stainless Steel with PEEK slide bearings for greater longevity and minimal maintenance. Suitable for small tanks up to 6.5 ft (2 m) in diameter, this compact nozzle creates vigorous spray action with complete 360° spray coverage.

BETE's rotating tank washing nozzles deliver up to 40% water savings compared to traditional static spray balls.

Rotational tank cleaning devices offer precise and reliable cleaning to prevent batch contamination.

Dimensions

DOWNLOAD drawings at EXAIR.com

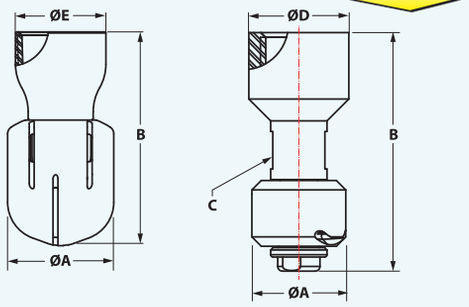

HWS52 HWM

What are the Benefits of Reactionary Force Tank Cleaning Nozzles?

Rotating tank cleaning nozzles generate rotation using the force of the cleaning fluid. They provide more mechanical force than traditional static spray balls, resulting in faster, more effective cleaning. This leads to significant resource savings and increased production.



BETE Nozzles

HydroWhirl® Stinger (HWS) Flow Rates and Coverage

Pattern: Tank Washing **Spray Angle:** 360° **Material:** 316L Stainless Steel Body, Ceramic Bearings

Female Inlet Connection	Model	Spray Angle	Flow Rate (GPM) @ Differential Pressure (PSI) 10 PSI	20 PSI	30 PSI	40 PSI	50 PSI	60 PSI	Max Free Passage (in)	Coverage Dia @ 40 PSI (ft)
1/8 FNPT Model	6212052	360°	1.09	1.51	1.83	**2.10**	2.33	2.54	0.025	2
	6212051		2.05	2.86	3.48	**4.00**	4.46	4.87	0.039	7
3/8 FNPT Model	6211903		4.94	7.03	8.64	**10.0**	11.2	12.3	0.024	8
	6211905		8.59	12.1	14.8	**17.0**	19.0	20.8	0.079	10
1/2 FNPT Model	6211907		10.2	14.3	17.4	**20.0**	22.3	24.3	0.039	10
	6211902		12.9	18.3	22.5	**26.0**	29.1	31.9	0.064	

Dimensions for Metal Only (in)

Pipe Size	A	B	E	Wt (oz)	Min Tank Entry Dia
1/8 FNPT	0.60	1.25	0.50	1.00	0.60
3/8 FNPT	0.85	1.81	0.75	1.41	0.85
1/2 FNPT	1.35	2.38	0.95	4.73	1.35

HydroWhirl® Stinger (HWS) Flow Rates and Coverage

Pattern: Tank Washing **Spray Angle:** 360° **Material:** 316L Stainless Steel Body, Ceramic Bearings

Female Inlet Connection	Model	Spray Angle	Flow Rate (L/min) @ Differential Pressure (BAR) 0.7 BAR	1 BAR	2 BAR	3 BAR	4 BAR	Max Free Passage (mm)	Coverage Dia @ 2 BAR (m)
1/8 FNPT Model	6212052	360°	4.15	4.92	6.83	**8.27**	9.48	0.64	0.6
	6212051		7.80	9.27	13.0	**15.8**	18.1	0.99	2
3/8 FNPT Model	6211903		18.8	22.6	32.1	**39.5**	45.7	0.61	2
	6211905		32.8	39.1	54.9	**67.1**	77.3	2.00	3
1/2 FNPT Model	6211907		39.0	46.3	64.8	**78.9**	90.6	0.99	3
	6211902		49.0	58.8	83.6	**103**	119	1.63	

Flow Rate L/min = K $\sqrt{BAR}$

Dimensions for Metal Only (mm)

Pipe Size	A	B	E	Wt (g)	Min Tank Entry Dia
1/8 FNPT	15.2	31.7	12.8	28.3	15.2
3/8 FNPT	21.6	45.2	19.1	40.0	21.6
1/2 FNPT	34.3	60.3	24.1	134	34.3

HydroWhirl® Mini (HWM) Flow Rates and Coverage

Pattern: Tank Washing **Spray Angle:** 360° **Material:** 316L Stainless Steel Body, PEEK Slide-Bearings

Female Inlet Connection	Model	Spray Angle	Flow Rate (GPM) @ Differential Pressure (PSI) 10 PSI	20 PSI	30 PSI	40 PSI	50 PSI	60 PSI	Max Free Passage (in)	Coverage Dia @ 40 PSI (in)
3/8 FNPT Model	6208384	360°	3.64	5.22	6.45	**7.50**	8.43	9.27	0.06	6

Dimensions for Metal Only (in)

Pipe Size	A	B	C	D	Wt (oz)
3/8 FNPT	0.81	2.00	0.44	0.70	2.60

HydroWhirl® Mini (HWM) Flow Rates and Coverage

Pattern: Tank Washing **Spray Angle:** 360° **Material:** 316L Stainless Steel Body, PEEK Slide-Bearings

Female Inlet Connection	Model	Spray Angle	Flow Rate (L/min) @ Differential Pressure (BAR) 0.7 BAR	1 BAR	2 BAR	3 BAR	4 BAR	Max Free Passage (mm)	Coverage Dia @ 3 BAR (m)
3/8 FNPT Model	6208384	360°	13.9	16.7	24.0	**29.7**	34.5	1.52	2

Flow Rate L/min = K $\sqrt{BAR}$

Dimensions for Metal Only (mm)

Pipe Size	A	B	C	D	Wt (g)
3/8 FNPT	20.3	50.8	12.7	17.8	73.7

EXAIR_Cat36_25_FROMINDESIGN.indb 113 12/20/24 3:47 PM

Rotating Tank Cleaning Nozzles

HydroWhirl® Poseidon (HWP) & HydroWhirl® Disc (HWD)



Series: HydroWhirl Poseidon (HWP)
Material: PTFE, 316L Stainless Steel Retaining Clip



Series: HydroWhirl Disc (HWD)
Materials: 316L Stainless Steel, PTFE Slide Bearing

HWP Models

Manufactured from FDA-compliant, corrosion-resistant PTFE, the HWP rotating spray nozzle is highly versatile, making it ideal for Clean-In-Place (CIP) applications in the food and beverage industry and for use in harsh chemical processing environments. Its slow-spinning design delivers longer spray dwell times on target surfaces, resulting in greater cleaning impact.

HWD Models

BETE's HWD spray nozzle is a powerful, fully submersible rotating tank cleaner designed for cleaning small to medium-sized tanks. This rotary head is fluid-driven and self-flushing for minimal maintenance. Its 360° spray pattern produces high-impact washing with consistent repetition to clean the tank effectively and efficiently.

Dimensions

DOWNLOAD drawings at EXAIR.com

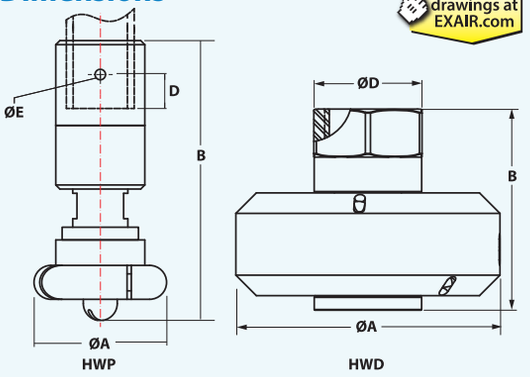

Guideline for nozzle placement:

(H/3) Nozzle = 1/3 Overall Tank Height (H).

Ideal nozzle placement is approximately 1/3 the height from the top of the tank.

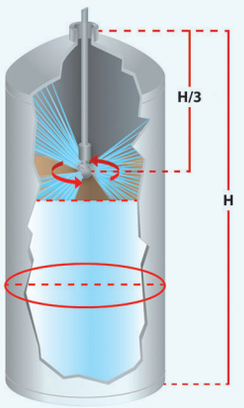

The HWP stands out as one of the only rotary tank cleaners on the market constructed of 100% PTFE. PTFE is extremely corrosion-resistant and has one of the lowest friction coefficients of any material.

The unique HWD can be completely submerged in the tank and effectively cleans small to medium-sized tanks.

HydroWhirl Poseidon (HWP) Flow Rates and Dimensions

Pattern: Tank Washing **Spray Angle:** 360° **Material:** PTFE Nozzle, 316L Stainless Steel Retaining Clip

Connection Type	Model	Spray Angle	Flow Rate (GPM @ PSI)						Dimensions (in)				Wt (oz)	Coverage Dia (ft) @ 40 PSI
			10 PSI	20 PSI	30 PSI	40 PSI	50 PSI	60 PSI	A	B	D MAX	E		
1/2 FNPT	6174366	360°	4.45	6.31	7.75	**8.96**	10.0	11.0	1.68	3.94	0.50	0.09	3	9
1 Tube Clip-On	6182138		10.7	15.2	18.6	**21.5**	24.0	26.3	1.95	4.12	0.50	0.16	4	14

HydroWhirl Poseidon (HWP) Flow Rates and Dimensions

Pattern: Tank Washing **Spray Angle:** 360° **Material:** PTFE Nozzle, 316L Stainless Steel Retaining Clip

Connection Type	Model	Spray Angle	Flow Rate (L/min @ BAR)						Dimensions (mm)				Wt (g)	Coverage Dia (m) @ 2.8 BAR
			0.5 BAR	1 BAR	1.5 BAR	2 BAR	3 BAR	4 BAR	A	B	D MAX	E		
1/2 FNPT	6174366	360°	14.3	20.3	24.9	28.8	**35.4**	40.9	42.7	100.1	12.7	2.4	85.0	2.7
1 Tube Clip-On	6182138		34.6	49.0	60.0	69.3	**84.9**	98.0	49.5	104.6	12.7	4.1	113	4.3

NOTE: Flow rates represent threaded connections with a 360° spray angle. Flow rates may vary slightly for clip-on connections.

HydroWhirl® Disk (HWD) Flow Rates and Coverage

Pattern: Tank Washing **Spray Angle:** 360° **Material:** 316L Stainless Steel Body, PEEK Slide-Bearing

Female Inlet Connection	Model	Spray Angle	Flow Rate (GPM) @ Differential Pressure (PSI)						Max Free Passage (in)	Coverage Dia @ 40 PSI (ft)
			10 PSI	20 PSI	30 PSI	40 PSI	50 PSI	60 PSI		
1 FNPT	6211162	360°	25.3	35.5	43.4	**50.0**	55.8	61.1	0.13	11

Dimensions (in)

Pipe Size	A	B	D	Wt (oz)
1 FNPT	3.88	2.94	1.56	41

HydroWhirl® Disk (HWD) Flow Rates and Coverage

Pattern: Tank Washing **Spray Angle:** 360° **Material:** 316L Stainless Steel Body, PEEK Slide-Bearing

Female Inlet Connection	Model	Spray Angle	Flow Rate (L/min) @ Differential Pressure (BAR)					Max Free Passage (mm)	Coverage Dia @ 2 BAR (m)
			0.7 BAR	1 BAR	2 BAR	3 BAR	4 BAR		
1 FNPT	6211162	360°	96.3	115	162	**198**	227	3.30	3

Dimensions (mm)

Pipe Size	A	B	D	Wt (g)
1 FNPT	98.4	74.8	40.6	1162

EXAIR_Cat36_25_FROMINDESIGN.indb 114 12/20/24 3:47 PM



Safety Air Guns

Safety Air Guns use engineered air nozzles for high performance!

Why EXAIR Safety Air Guns?

Inexpensive air guns are sold through many catalogs and industrial supply companies. Most have triggers or other parts that break quickly. Their performance is similar to open pipe, where they simply blow a lot of compressed air. In addition to the high air consumption, many produce noise levels that violate OSHA requirements. Some even generate dangerous dead end pressures that can result in serious or fatal injuries if blocked.

EXAIR's Safety Air Guns eliminate these problems. They are durable and comfortable to use. Each model uses an engineered Air Nozzle that provides superior performance by entraining large volumes of surrounding air. Safe operation is assured along with low air consumption and noise levels. Airflow that exits the nozzle cannot be blocked, as required by OSHA standard 1910.242(b).

Selecting The Right Safety Air Gun

The pages that follow show six Safety Air Guns. The VariBlast® Precision and Compact, Soft Grip, Heavy Duty, TurboBlast® and Super Blast Safety Air Guns are available with a variety of air nozzles (listed in order of force). Stainless steel air nozzles provide more mechanical wear resistance while withstanding corrosion and high temperatures. PEEK Air Nozzles provide protection from accidental impact with the target and outstanding corrosion resistance. Air consumption, force and sound level are shown for all models. Complete details for each Air Nozzle are shown on pages 52-69.



VariBlast® Precision Safety Air Gun

- Low airflow and force up to 8.1 ounces
- Variable flow trigger, 1/4 NPT inlet
- Extremely lightweight, high impact thermoplastic
- OSHA compliant for noise and pressure



Heavy Duty Safety Air Gun

- Medium to high airflow and force up to 3.3 pounds
- Wide curved trigger, rubber grip, 3/8 NPT inlet
- Cast aluminum body
- OSHA compliant for noise and pressure



VariBlast® Compact Safety Air Gun

- Low to medium airflow and force up to 1 pound
- Variable flow trigger, (2) 1/4 NPT inlets
- Cast aluminum body, hanger hook
- OSHA compliant for noise and pressure



TurboBlast® Safety Air Gun

- Very high airflow and force up to 23 pounds
- Ergonomic, soft handle
- One finger push-button trigger
- Adjustable airflow
- OSHA compliant for noise and pressure
- 1 NPT inlet



Soft Grip Safety Air Gun

- Medium to high airflow and force up to 3.3 pounds
- Full finger trigger, padded grip, 1/4 NPT inlet
- Cast aluminum body, hanger hook
- OSHA compliant for noise and pressure



Super Blast Safety Air Gun

- Very high airflow and force up to 23 pounds
- Spring loaded ball valve trigger, and foam handle
- OSHA compliant for noise and pressure
- 3/8 NPT - 1-1/4 NPT Inlets



EXAIR_Cat36_25_FROMINDESIGN.indb 115 12/20/24 3:47 PM

Chip Shields



Protect workers from flying debris and prevent splash back!

Why the EXAIR Chip Shield?

Chip Shields are durable polycarbonate shields that protect operators from flying debris often associated with blowing chips off machined parts. Chip Shields are also great for keeping coolant from spreading everywhere during drying operations. EXAIR's Chip Shields help meet the requirements of OSHA 1910.242(b) for safe use of compressed air.

Chip Shields are available for EXAIR's VariBlast Precision and Compact Safety Air Gun, Soft Grip Safety Air Gun and Heavy Duty Safety Air Gun. Chip Shields can be used on Safety Air Guns with or without an Aluminum Extension. Chip Shields are not for use on guns that use a Stay Set Hose.

How to Order the EXAIR Chip Shield.

To order a Safety Air Gun with a Chip Shield, simply add a '-CS' to the end of the model number.

Examples:

Model 1210-CS is a Model 1210 Soft Grip Safety Air Gun with a Chip Shield.

Model 1310-12-CS is a Model 1310 Heavy Duty Safety Air Gun with a 12" (305mm) Aluminum Extension Pipe and Chip Shield.



See our Terms & Conditions


Model 1810SS-CS shown


Model 1696SS-CS shown


Model 1360SS-CS shown


Model 1299-6-CS shown

Chip Shields for Safety Air Guns With Aluminium Extensions

Chip Shields are also available to be retrofitted to existing Safety Air Guns. For models that already have an Aluminum Extension in place, the Chip Shield is supplied with a rubber grommet to ensure a tight fit onto the extension.

Chip Shield #	Safety Air Gun Models Covered
901220	1808SS, 1808-PEEK, 1809SS, 1809-PEEK, 1810SS, 1810-PEEK
901221	1229, 1229SS, HP1229, HP1229SS, 1280SS, 1290, 1290SS, 1296SS, 1296-PEEK, 1297SS, 1297-PEEK, 1298SS, 1298-PEEK, 1299, 1299SS, 1299-PEEK, 1696SS, 1696-PEEK, 1697SS, 1697-PEEK, 1698SS, 1698-PEEK, 1699, 1699-PEEK, 1699SS, 1629, 1629SS, 1680SS, 1690, 1690SS, HP1629, HP1629SS
901222	1210, 1210SS, 1210-PEEK, 1230, 1230SS, HP1230, HP1230SS, 1310, 1310SS, 1310-PEEK, 1330, 1330SS, HP1330, HP1330SS
901223	1240, 1250, 1250SS, 1250-PEEK, 1260, 1260SS, 1260-PEEK, 1340, 1350, 1350SS, 1350-PEEK, 1360, 1360SS, 1360-PEEK

Chip Shields for Safety Air Guns Without Aluminium Extensions

For models that do not already have an Aluminum Extension in place, a short extension nipple and the necessary adapter are provided.

Chip Shield Kit #	Safety Air Gun Models Covered
901231	1229, 1229SS, HP1229, HP1229SS, 1280SS, 1290, 1290SS, 1296SS, 1296-PEEK, 1297SS, 1297-PEEK, 1298SS, 1298-PEEK, 1299, 1299SS, 1299-PEEK, 1696SS, 1696-PEEK, 1697SS, 1697-PEEK, 1698SS, 1698-PEEK, 1699, 1699-PEEK, 1699SS, 1629, 1629SS, 1680SS, 1690, 1690SS, HP1629, HP1629SS
901232	1210, 1210SS, 1210-PEEK, 1230, 1230SS, HP1230, HP1230SS, 1310, 1310SS, 1310-PEEK, 1330, 1330SS, HP1330, HP1330SS
901233	1240, 1250, 1250SS, 1250-PEEK, 1340, 1350, 1350SS, 1350-PEEK
901234	1260, 1260SS, 1360, 1360SS

EXAIR_Cat36_25_FROMINDESIGN.indb 116 12/20/24 3:47 PM

An Intelligent Compressed Air® Product

2021 Plant Engineering Product of the Year Silver Award

PTEN People's Choice 2022

VariBlast® Precision Safety Air Gun - 1/4 NPT Inlet

EXAIR's VariBlast® Precision Safety Air Guns are extremely lightweight and have a focused blast of air that provides remarkable cleaning capability. Designed with a variable flow trigger, the air flow is easily adjustable and able to produce a range of different force values. It comes equipped with a small diameter nozzle and extension that easily fits into tight spaces and delivers a pinpoint, but powerful blast. Two other extension lengths are available.

The VariBlast Precision Safety Air Gun is available with EXAIR's Atto, Pico and Nano Air Nozzles, which are engineered to maximize entrainment of ambient air, while minimizing air consumption and noise. The airflow that exits the nozzle can't be blocked, assuring safe operation and meeting required OSHA standards 1910.242(b). The VariBlast also boasts a 58 to 75 dBA noise level (depending on the nozzle installed) which is well below the limits of OSHA Standard 29 CFR 1910.95(a) for maximum allowable noise exposure.

These intelligent nozzles come in either Type 316 stainless steel for superior corrosion resistance or PEEK plastic for non-marring applications and increased chemical resistance. The air gun body is made of high impact, acetal thermoplastic and all models are available with an impact resistant polycarbonate Chip Shield. Extension material is Type 316 stainless steel. The VariBlast is also fashioned with a 1/4 NPT inlet for easy hook up to your compressed air supply.



Chip Shields can be added to EXAIR's Safety Air Guns by adding a "-CS" to the Model #.

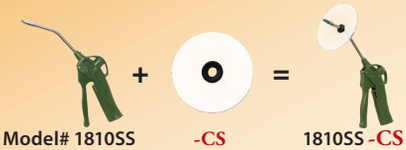

Example:
1810SS (VariBlast Precision Safety Air Gun)
\+ **-CS** (Chip Shield)
1810SS -CS

Type 316 Stainless Steel Extension Pipe

All VariBlast Precision Safety Air Guns with Extension Pipes come fully assembled.

Model Addition #	Length
-12	12" (305mm)
-20	20" (508mm)

Add An Extension Pipe

Add an Extension Pipe to your VariBlast Precision Safety Air Gun. Here's how:

Example:

1. Choose an EXAIR VariBlast Precision Safety Air Gun.
   Model 1808SS
2. To add an Extension Pipe, create the model number by adding a dash and number of the appropriate length after the model of the VariBlast Precision Safety Air Gun. The Model 1808SS VariBlast Precision Safety Air Gun with a 12" (305mm) Extension Pipe is a **Model 1808SS-12**.



Model 1808SS
VariBlast Precision Safety Air Gun

Nozzle: 1108SS Stainless Steel Atto Super Air Nozzle

Also Available: 1808-PEEK with 1108-PEEK PEEK Plastic Atto Super Air Nozzle

Air Consumption		Force*		Sound Level
SCFM	SLPM	Ozs	Grams	dBA
2.5	71	2.0	57	58



Model 1809SS
VariBlast Precision Safety Air Gun

Nozzle: 1109SS Stainless Steel Pico Super Air Nozzle

Also Available: 1809-PEEK with 1109-PEEK PEEK Plastic Pico Super Air Nozzle

Air Consumption		Force*		Sound Level
SCFM	SLPM	Ozs	Grams	dBA
4.9	139	5.0	142	68



Model 1810SS
VariBlast Precision Safety Air Gun

Nozzle: 1110SS Stainless Steel Nano Super Air Nozzle

Also Available: 1810-PEEK with 1110-PEEK PEEK Plastic Nano Super Air Nozzle

Air Consumption		Force*		Sound Level
SCFM	SLPM	Ozs	Grams	dBA
8.3	235	8.1	230	75

Use Model 900750 Coiled Hose



* Force measured at 12" (305mm) from target. Sound level measured at 3' (914mm). All measurements taken at 80 PSIG (5.5 BAR).

VARIBLAST® Compact Safety Air Guns

VARIBLAST® Compact Safety Air Gun - 1/4 NPT Inlet



EXAIR's VariBlast Compact Safety Air Guns are small and lightweight air guns capable of handling tough jobs. Designed with a variable flow trigger, they are able to produce different force values from the same nozzle simply by pulling the trigger more or less. These air guns can be outfitted with all of EXAIR's 1/8 NPT engineered air nozzles and extensions are available up to 72" long.



The wide variety of intelligent compressed air nozzles installed on the VariBlast Compact Safety Air Gun make it a great selection for light to medium duty applications requiring force values of up to 1 pound while remaining among the most efficient air guns in EXAIR's product line. EXAIR Super Air Nozzles are engineered to maximize entrainment of ambient air while minimizing air consumption and noise. Safe operation is assured since airflow that exits the nozzle cannot be blocked, per OSHA Standard 1910.242(b). The 58 to 82 dBA noise level is well below the limits of the OSHA maximum noise exposure standard 29 CFR 1910.95(a).

Engineered air nozzles are available in Type 316 stainless steel for superior corrosion resistance and mechanical wear, Type 303SS for corrosion resistance, PEEK thermoplastic for nonmarring and chemical resistance or zinc/aluminum alloy or aluminum for general purpose applications. The air gun body is cast aluminum and has two 1/4 NPT air inlets to ensure ergonomic handling. All models are available with an impact resistant polycarbonate Chip Shield.



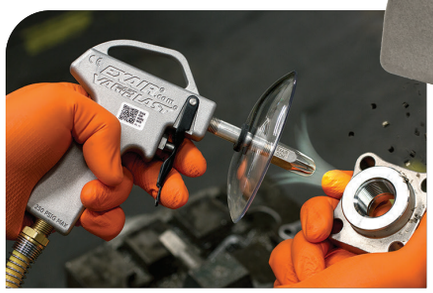

The Model 1699-CS removes chips and coolant from a machined part.



Model 1699
VariBlast Compact Safety Air Gun
Nozzle: 1103 Mini Super Air Nozzle



Model 1699SS
VariBlast Compact Safety Air Gun
Nozzle: 1103SS Stainless Steel Mini Super Air Nozzle

The Model 1699SS uses the stainless steel Super Air Nozzle constructed of Type 316 stainless steel for rugged use and corrosion resistance.



Model 1699–PEEK
VariBlast Compact Safety Air Gun
Nozzle: 1102-PEEK Plastic Mini Super Air Nozzle

The Model 1699-PEEK uses the PEEK Super Air Nozzle for non-marring and chemical resistance.

Air Consumption		Force*		Sound Level
SCFM	SLPM	Ozs	Grams	dBA
10	283	9	255	71



* Force measured at 12" (305mm) from target. Sound level measured at 3' (914mm). All measurements taken at 80 PSIG (5.5 BAR).

EXAIR_Cat36_25_FROMINDESIGN.indb 118 12/20/24 3:47 PM

VARIBLAST® Compact Safety Air Guns

An INTELLIGENT COMPRESSED AIR® Product



Model 1696SS VariBlast Compact Safety Air Gun
Nozzle: 1108SS Stainless Steel Atto Super Air Nozzle
Also Available: 1696-PEEK with 1108-PEEK PEEK Plastic Atto Super Air Nozzle

Air Consumption		Force*		Sound Level
SCFM	SLPM	Ozs	Grams	dBA
2.5	71	2.0	57	58





Model 1697SS VariBlast Compact Safety Air Gun
Nozzle: 1109SS Stainless Steel Pico Super Air Nozzle
Also Available: 1697-PEEK with 1109-PEEK PEEK Plastic Pico Super Air Nozzle

Air Consumption		Force*		Sound Level
SCFM	SLPM	Ozs	Grams	dBA
4.9	139	5.0	142	68





Model 1698SS VariBlast Compact Safety Air Gun
Nozzle: 1110SS Stainless Steel Nano Super Air Nozzle
Also Available: 1698-PEEK with 1110-PEEK PEEK Plastic Nano Super Air Nozzle

Air Consumption		Force*		Sound Level
SCFM	SLPM	Ozs	Grams	dBA
8.3	235	8.1	230	75





Flat air pattern

Model 1629 VariBlast Compact Safety Air Gun
Nozzle: 1126 1" Flat Super Air Nozzle
Also Available: 1629SS with 1126SS Stainless Steel 1" Flat Super Air Nozzle
.015" (0.38mm) shim installed

Air Consumption		Force*		Sound Level
SCFM	SLPM	Ozs	Grams	dBA
10.5	297	9.8	278	75





Model 1680SS VariBlast Compact Safety Air Gun
Nozzle: 1010SS Micro Super Air Nozzle

Air Consumption		Force*		Sound Level
SCFM	SLPM	Ozs	Grams	dBA
13	368	12	340	80





Model 1690 VariBlast Compact Safety Air Gun
Nozzle: 1009 Adjustable Air Nozzle
Also Available: 1690SS with 1009SS Stainless Steel Adjustable Air Nozzle

Air Consumption		Force*		Sound Level
SCFM	SLPM	Ozs	Grams	dBA
13	368	12	340	79





Flat air pattern

Model HP1629 VariBlast Compact Safety Air Gun
Nozzle: HP1126 1" High Power Flat Super Air Nozzle
Also Available: HP1629SS with HP1126SS Stainless Steel 1" High Power Flat Super Air Nozzle
.025" (0.64mm) shim installed

Air Consumption		Force*		Sound Level
SCFM	SLPM	Ozs	Grams	dBA
17.5	495	16	454	82





Model 1604SS-6-CS
VariBlast Compact Back Blow Safety Air Gun, 6" extension
Nozzle: 1004SS Stainless Steel Back Blow Air Nozzle
Also Available: Models 1604SS-12-CS (12" ext.), **1604SS-24-CS** (24" ext.), **1604SS-36-CS** (36" ext.), with 1004SS Stainless Steel Back Blow Air Nozzle, Aluminum Extension and Chip Shield

Air Consumption		Sound Level	Use With:
SCFM	SLPM	dBA	Inside Diameter
4.5	127	75	1/4"-1" (6.3-25.4mm)



* Force measured at 12" (305mm) from target. Sound level measured at 3' (914mm). All measurements taken at 80 PSIG (5.5 BAR).

Add An Extension Pipe

Add an Extension Pipe to your VariBlast Compact Safety Air Gun. Here's how:

1. Choose an EXAIR VariBlast Compact Safety Air Gun.
   Model 1699

To add an Aluminum Extension Pipe, create the model number by adding a dash and number of the appropriate extension length after the model of the VariBlast Compact Safety Air Gun. The Model 1699 VariBlast Compact Safety Air Gun with a 12" (305mm) Aluminum Extension Pipe is a **Model 1699-12**.

Aluminum Extension Pipe

All VariBlast Compact Safety Air Guns with Extension Pipes come fully assembled.

Model Addition #	Length
-6	6" (152mm)
-12	12" (305mm)
-18	18" (457mm)
-24	24" (610mm)
-36	36" (914mm)
-48	48" (1219mm)
-60	60" (1524mm)
-72	72" (1829mm)

Chip Shields can be added to EXAIR's Safety Air Guns by adding a "-CS" to the Model #.



Example:
1699 (VariBlast Compact Safety Air Gun)
\+ **-CS** (Chip Shield)
1699-CS

EXAIR_Cat36_25_FROMINDESIGN.indb 119 12/20/24 3:47 PM

Soft Grip Safety Air Guns

Soft Grip Safety Air Gun - 1/4 NPT Inlet

EXAIR's Soft Grip Safety Air Gun is ideal for hours of continuous use without fatigue. The ergonomic design keeps the hand in a comfortable position and incorporates a large trigger that permits operation with one or more fingers. The durable cast aluminum body is suited for rugged industrial use and includes a convenient hanger hook for easy storage. The Soft Grip Safety Air Gun is available with Air Nozzles as shown for quiet, safe and efficient use of the compressed air supply. Aluminum Extension Pipes, Stay Set Hoses, and Chip Shields are available for most models. The inlet is 1/4 NPT.





Model 1210-CS keeps a drilling process free of machined spirals.



TOP PICK

Model 1210 SG Safety Air Gun
Nozzle: 1100T Super Air Nozzle

Air Consumption		Force*		Sound Level
SCFM	SLPM	Ozs	Grams	dBA
14	396	13	369	74





Model 1210SS SG Safety Air Gun
Nozzle: 1100SST Super Air Nozzle
The Model 1210SS uses the stainless steel Super Air Nozzle constructed of Type 316 stainless steel for rugged use and corrosion resistance.



Model 1210–PEEK SG Safety Air Gun
Nozzle: 1100T–PEEK Super Air Nozzle
The Model 1210-PEEK uses the PEEK Super Air Nozzle for non-marring and chemical resistance.

*Force measured at 12" (305mm) from target. Sound level measured at 3' (914mm). All measurements taken at 80 PSIG (5.5 BAR).

EXAIR_Cat36_25_FROMINDESIGN.indb 120 12/20/24 3:47 PM

Soft Grip Safety Air Guns

An INTELLIGENT COMPRESSED AIR® Product



Model 1299 SG Safety Air Gun
Nozzle: 1103 Mini Super Air Nozzle

Also Available: 1299SS with 1103SS Stainless Steel Mini Super Air Nozzle
1299-PEEK with 1102-PEEK PEEK Plastic Mini Super Air Nozzle

Air Consumption		Force*		Sound Level
SCFM	SLPM	Ozs	Grams	dBA
10	283	9.0	255	71



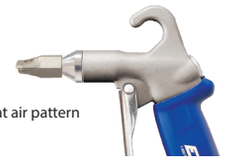

Flat air pattern

Model 1229 SG Safety Air Gun
Nozzle: 1126 1" Flat Super Air Nozzle

Also Available: 1229SS with 1126SS Stainless Steel 1" Flat Super Air Nozzle

.015" (0.38mm) shim installed

Air Consumption		Force*		Sound Level
SCFM	SLPM	Ozs	Grams	dBA
10.5	297	9.8	278	75





Model 1290 SG Safety Air Gun
Nozzle: 1009 Adjustable Air Nozzle

Also Available: 1290SS with 1009SS Stainless Steel Adjustable Air Nozzle

Air Consumption		Force*		Sound Level
SCFM	SLPM	Ozs	Grams	dBA
13	368	12	340	79





Model 1280SS SG Safety Air Gun
Nozzle: 1010SS Micro Air Nozzle

Air Consumption		Force*		Sound Level
SCFM	SLPM	Ozs	Grams	dBA
13	368	12	340	80



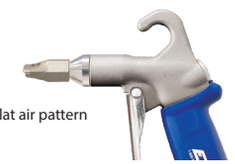

Flat air pattern

Model HP1229 SG Safety Air Gun

Nozzle: HP1126 1" High Power Flat Super Air Nozzle

Also Available: HP1229SS with HP1126SS Stainless Steel 1" High Power Flat Super Air Nozzle

.025" (0.64mm) shim installed

Air Consumption		Force*		Sound Level
SCFM	SLPM	Ozs	Grams	dBA
17.5	495	16	454	82



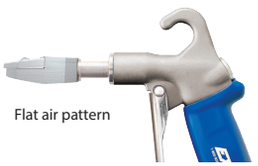

Flat air pattern

Model 1230 SG Safety Air Gun

Nozzle: 1122 2" Flat Super Air Nozzle

Also Available: 1230SS with 1122SS Stainless Steel 2" Flat Super Air Nozzle

.015" (0.38mm) shim installed

Air Consumption		Force*		Sound Level
SCFM	SLPM	Ozs	Grams	dBA
22	622	22	624	77



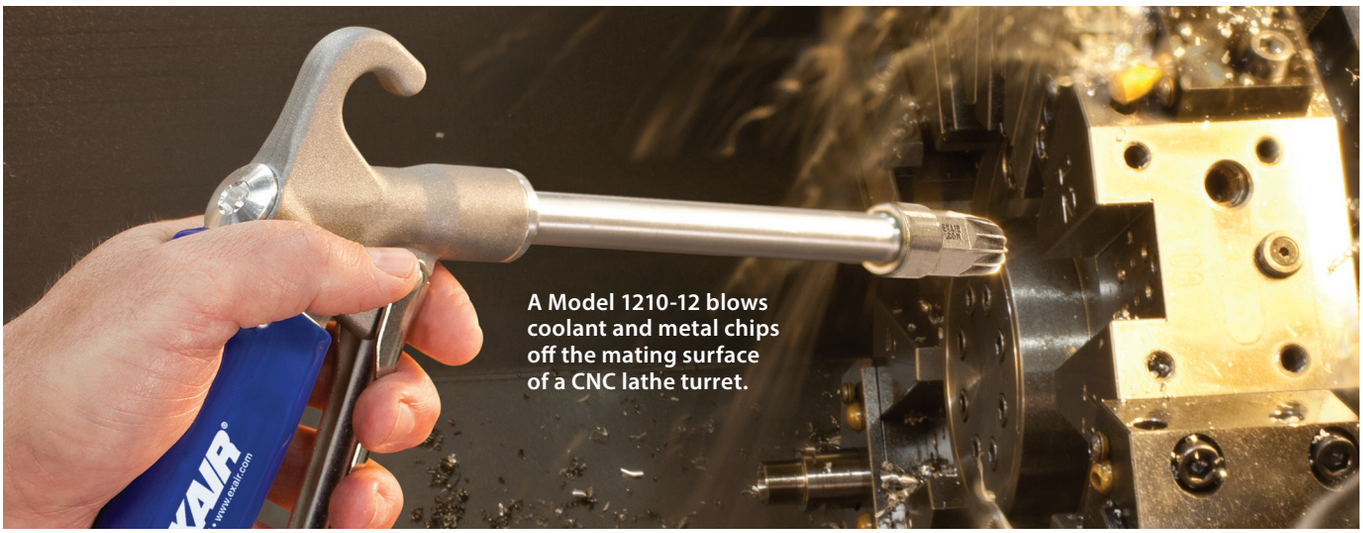

Soft Grip Safety Air Guns

An INTELLIGENT COMPRESSED AIR® Product



Model 1250 SG Safety Air Gun
Nozzle: 1104 3/8 NPT Super Air Nozzle
Also Available: 1250SS with 1104SS 3/8 NPT Stainless Steel Super Air Nozzle

1250-PEEK with 1104-PEEK 3/8 NPT PEEK Plastic Super Air Nozzle

Air Consumption		Force*		Sound Level
SCFM	SLPM	Lbs	Grams	dBA
35	991	1.9	862	82

* Force measured at 12" (305mm) from target.
Sound level measured at 3' (914mm).
All measurements taken at 80 PSIG (5.5 BAR).

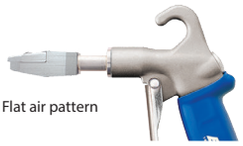

Flat air pattern

Model HP1230 SG Safety Air Gun
Nozzle: HP1125 2" High Power Flat Super Air Nozzle
Also Available: HP1230SS with HP1125SS Stainless Steel 2" High Power Flat Super Air Nozzle

.025" (0.64mm) shim installed

Air Consumption		Force*		Sound Level
SCFM	SLPM	Lbs	Grams	dBA
37	1,039	2.2	998	83



Model 1240 SG Safety Air Gun
Nozzle: 1111-4 Super Air Nozzle Cluster

Air Consumption		Force*		Sound Level
SCFM	SLPM	Lbs	Grams	dBA
56	1,585	3.2	1,451	82



Model 1260 SG Safety Air Gun
Nozzle: 1106 1/2 NPT Super Air Nozzle
Also Available: 1260SS with 1106SS 1/2 NPT Stainless Steel Super Air Nozzle

1260-PEEK with 1106-PEEK 1/2 NPT PEEK Plastic Super Air Nozzle

Air Consumption		Force*		Sound Level
SCFM	SLPM	Lbs	Grams	dBA
60	1,699	3.3	1,497	87



Model 1204SS-6-CS SG Back Blow Safety Air Gun
Nozzle: 1004SS Stainless Steel Back Blow Air Nozzle, Aluminum Extension and Chip Shield

Air Consumption		Sound Level	Use With:
SCFM	SLPM	dBA	Inside Diameter
4.5	127	75	1/4" - 1" (6.3-25.4mm)

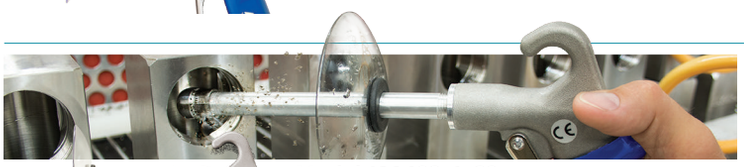

The Model 1206SS-6-CS Back Blow Safety Air Gun removes chips from the inside of a machined part.

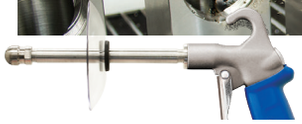

Model 1206SS-6-CS SG Back Blow Safety Air Gun
Nozzle: 1006SS Stainless Steel Back Blow Air Nozzle, Aluminum Extension and Chip Shield

Air Consumption		Sound Level	Use With:
SCFM	SLPM	dBA	Inside Diameter
22	622	80	7/8" - 4" (22–102mm)

Safety Air guns

Add An Extension Pipe Or Stay Set Hose

Add an Extension Pipe or Stay Set Hose to your Soft Grip Safety Air Gun. Here's how:

1. Choose an EXAIR Soft Grip Safety Air Gun.
   Model 1210
2. To add an Aluminum Extension Pipe, create the model number by adding a dash and number of the appropriate extension length after the model of the Soft Grip Safety Air Gun. (See table to right) The Model 1210 Soft Grip Safety Air Gun with a 12" (305mm) Aluminum Extension Pipe is a **Model 1210-12**.
3. To add a Stay Set Hose, create the model number by adding a dash and number of the appropriate Stay Set Hose after the model of the Soft Grip Safety Air Gun. (See table to the far right) The Model 1210 Safety Air Gun with a 12" (305mm) Stay Set Hose is a **Model 1210-12SSH**.



Aluminum Extension Pipe

All Soft Grip Safety Air Guns with Extension Pipes come fully assembled.

Model Addition #	Length
-6	6" (152mm)
-12	12" (305mm)
-18	18" (457mm)
-24	24" (610mm)
-36	36" (914mm)
-48	48" (1219mm)
-60	60" (1524mm)
-72	72" (1829mm)



Stay Set Hose

All Soft Grip Safety Air Guns with Stay Set Hoses come fully assembled.

Model Addition #	Length
-6SSH	6" (152mm)
-12SSH	12" (305mm)
-18SSH	18" (457mm)
-24SSH	24" (610mm)
-30SSH	30" (762mm)
-36SSH	36" (914mm)

Stay Set Hose not available with 1240, 1250, 1260, 1204SS and 1206SS models.

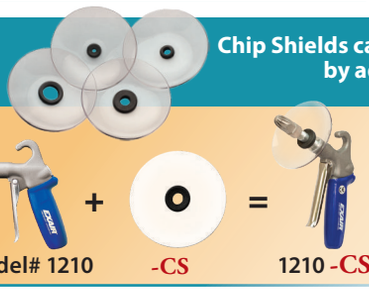

Chip Shields can be added to EXAIR's Safety Air Guns by adding a "-CS" to the Model #.

Example:

1210 (Soft Grip Safety Air Gun)
\+ **-CS** (Chip Shield)
1210 -CS

For Technical Assistance, Call an EXAIR Application Engineer 1-800-903-9247
Toll Free FAX (866) 329-3924 • E-mail: techelp@exair.com • www.exair.com

EXAIR_Cat36_25_FROMINDESIGN.indb 122 12/20/24 3:47 PM

An INTELLIGENT COMPRESSED AIR® Product

Soft Grip Super Air Scraper™ - 1/4 NPT Inlet

EXAIR's Soft Grip Super Air Scraper is a safety air gun designed to help remove the most stubborn debris found within industrial facilities. The patented† design uses a scraping blade to assist the powerful compressed air flow removal of debris. This product is perfect for removal of caulk, gaskets, sealant, adhesives, tape, paint, stickers, labels, grease, lubricant and difficult to sweep metal chips, flakes or discs. It will help keep your machining tables, sub plate and assembly stations clean and functional.

The corrosion resistant steel scraper is attached to a 2" Flat Super Air Nozzle and a 3/4" extension to provide the strength and durability necessary for many of your toughest cleaning and housekeeping challenges. Extensions for the Soft Grip Super Air Scraper are available from 6"-72" long to aid in cleaning table tops, inside machines, reaching the floor or other remote surfaces. Chip Shields are also available.

†Patent #10,779,698





Model 1244
Soft Grip Super Air Scraper
Nozzle: 1144 1/4 NPT
2" Super Air Scraper

Air Consumption		Force*		Sound Level
SCFM	SLPM	Ozs	Grams	dBA
22	622	22	624	77



Use Model 900750 Coiled Hose

Soft Grip Super Air Scraper Accessories

Model #	Description
1144	Super Air Scraper replacement nozzle (performance details on page 57)
902007	Replacement scraper blade only
901223	Chip Shield for 3/4" extension
1132SS	2" Flat Super Air Nozzle Shim Set



The Model 1244-36 scrapes and blows old tape off a concrete floor.

Add An Extension Pipe

Add an Extension Pipe to your Soft Grip Super Air Scraper. Here's how:

1. Choose an EXAIR Soft Grip Super Air Scraper.
   Example: Model 1244
2. To add an Aluminum Extension Pipe, create the model number by adding a dash and number of the appropriate extension length after the model of the Soft Grip Super Air Scraper.
   Example The Model 1244 Soft Grip Super Air Scraper with a 36" (914mm) Aluminum Extension Pipe is a **Model 1244-36**.

Aluminum Extension Pipe

All Soft Grip Super Air Scrapers with Extension Pipes come fully assembled.

Model Addition	Length
-6	6" (152mm)
-12	12" (305mm)
-18	18" (457mm)
-24	24" (610mm)
-36	36" (914mm)
-48	48" (1219mm)
-60	60" (1524mm)
-72	72" (1829mm)

Chip Shields can be added to EXAIR's Safety Air Guns by adding a "-CS" to the Model #.

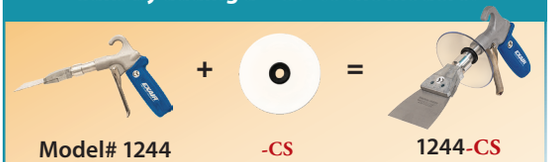

Example:
1244 (Soft Grip Super Air Scraper)
+ -CS (Chip Shield)
1244-CS

EXAIR_Cat36_25_FROMINDESIGN.indb 123 12/20/24 3:47 PM

Heavy Duty Safety Air Guns

Heavy Duty Safety Air Gun - 3/8 NPT Inlet

Model 1310 Heavy Duty Safety Air Gun
Nozzle: 1100T Super Air Nozzle



Air Consumption		Force*		Sound Level
SCFM	SLPM	Ozs	Grams	dBA
14	396	13	369	74

EXAIR's Heavy Duty Safety Air Gun is a powerful air gun that delivers high force for use in rugged, industrial environments. The 3/8 NPT compressed air inlet increases the compressed air flow available to the Super Air Nozzle, resulting in higher force and flow than other air guns. The durable cast aluminum body includes an ergonomic composite rubber grip and wide curved trigger that makes it comfortable for hours of use without fatigue. Aluminum Extension Pipes and Chip Shields are available.
(Stay Set Hoses are not available.)



Model 1310SS HD Safety Air Gun
Nozzle: 1100SST Super Air Nozzle
Type 316 Stainless Steel Super Air Nozzle for rugged use and corrosion resistance.



Model 1310–PEEK HD Safety Air Gun
Nozzle: 1100T–PEEK Super Air Nozzle
PEEK Super Air Nozzle for non-marring and chemical resistance.

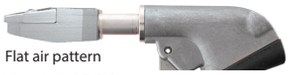

Model 1330 HD Safety Air Gun

Air Consumption		Force*		Sound Level
SCFM	SLPM	Ozs	Grams	dBA
22	622	22	624	77



Nozzle:
1122 2" Flat Super Air Nozzle

Also Available:
1330SS with 1122SS Stainless Steel 2" Flat Super Air Nozzle
.015" (0.38mm) shim installed

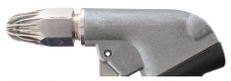

Model 1350 HD Safety Air Gun

Air Consumption		Force*		Sound Level
SCFM	SLPM	lbs	Grams	dBA
35	991	1.9	862	82



Nozzle:
1104 3/8 NPT Super Air Nozzle

Also Available:
1350SS with 1104SS 3/8 NPT Stainless Steel Super Air Nozzle
1350-PEEK with 1104-PEEK 3/8 NPT PEEK Plastic Super Air Nozzle

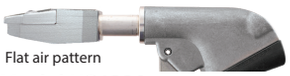

Model HP1330 HD Safety Air Gun

Air Consumption		Force*		Sound Level
SCFM	SLPM	lbs	Grams	dBA
37	1,039	2.2	998	83

Nozzle:
HP1125 2" High Power Flat Super Air Nozzle

Also Available:
HP1330SS with HP1125SS Stainless Steel 2" High Power Flat Super Air Nozzle
.025" (0.64mm) shim installed

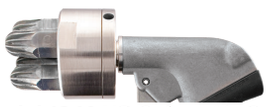

Model 1340 HD Safety Air Gun

Air Consumption		Force*		Sound Level
SCFM	SLPM	lbs	Grams	dBA
56	1,585	3.2	1,451	82

Nozzle:
1111-4 Super Air Nozzle Cluster

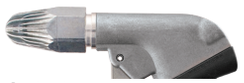

Model 1360 HD Safety Air Gun

Air Consumption		Force*		Sound Level
SCFM	SLPM	lbs	Grams	dBA
60	1,699	3.3	1,497	87

Nozzle:
1106 1/2 NPT Super Air Nozzle

Also Available:
1360SS with 1106SS 1/2 NPT Stainless Steel Super Air Nozzle
1360-PEEK with 1106-PEEK 1/2 NPT PEEK Plastic Super Air Nozzle

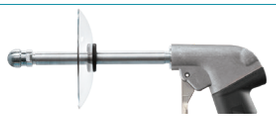

Model 1306SS-X-CS HD Back Blow Safety Air Gun

Air Consumption		Sound Level	Use With:
SCFM	SLPM	dBA	Inside Diameter
22	622	80	7/8" – 4" (22–102mm)

Nozzle:
1006SS Stainless Steel Back Blow Air Nozzle, Aluminum Extension, and Chip Shield

*Force measured at 12" (305mm) from target. Sound level measured at 3' (914mm). All measurements taken at 80 PSIG (5.5 BAR).



Add An Extension Pipe

Add an Extension Pipe to your Heavy Duty Safety Air Gun. Here's how:

1. Choose an EXAIR Heavy Duty Safety Air Gun.
   Example: Model 1310
1. To add an Aluminum Extension Pipe, create the model number by adding a dash and number of the appropriate extension length after the model of the Heavy Duty Safety Air Gun. (See table below)
   Example: The Model 1310 Heavy Duty Safety Air Gun with a 12" (305mm) Aluminum Extension Pipe is a **Model 1310-12**.

Aluminum Extension Pipe

All Heavy Duty Safety Air Guns with Extension Pipes come fully assembled.

Model Addition # / Extension Length	
-6	6" (152mm)
-12	12" (305mm)
-18	18" (457mm)
-24	24" (610mm)
-36	36" (914mm)
-48	48" (1219mm)
-60	60" (1524mm)
-72	72" (1829mm)

Chip Shields can be added to EXAIR's Safety Air Guns by adding a "-CS" to the Model#.

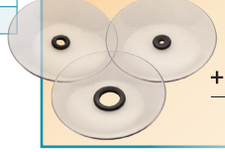

Example:
1310 (Heavy Duty Air Gun)
+ **-CS** (Chip Shield)
1310-CS

See page 107 for available models

EXAIR_Cat36_25_FROMINDESIGN.indb 124 12/20/24 3:47 PM

An INTELLIGENT COMPRESSED AIR® Product

Back Blow Safety Air Guns - 1/4, 3/8 and 1 NPT Inlet

Back Blow Safety Air Guns are perfect for cleaning out the inside of pipe, tube, hose or channels. EXAIR's engineered Back Blow nozzle provides a powerful 360 degree airflow through an array of holes to remove coolant, chips or debris. Available in our VariBlast, Soft Grip, Heavy Duty or Super Blast version, each gun style can be outfitted with an up to 72" extension to reach far into your application and provide airflow. VariBlast, Soft Grip and Heavy Duty Back Blow Safety Air Guns are outfitted with a Chip Shield to protect the operator from flying debris. Since airflow is directed back toward the operator, personal protection equipment is recommended.



Model 1604SS-x-CS
VariBlast Compact Back Blow Safety Air Gun

Nozzle:
1004SS Stainless Steel Back Blow Air Nozzle, Aluminum Extension and Chip Shield

The **VariBlast Compact Back Blow Safety Air Gun** has dual 1/4 NPT inlets and provides a variable force trigger on a small, powerful and ergonomic air gun.

	Air Consumption		Sound Level	Use With:
Model #	SCFM	SLPM	dBA	Inside Diameter
1604SS	4.5	127	75	1/4"-1" (6.3-25.4mm)

Model #	Description	Model #	Description
1604SS-6-CS	VariBlast, 6" Extension, Chip Shield	1604SS-24-CS	VariBlast, 24" Extension, Chip Shield
1604SS-12-CS	VariBlast, 12" Extension, Chip Shield	1604SS-36-CS	VariBlast, 36" Extension, Chip Shield



Model 1204SS-x-CS
Soft Grip Back Blow Safety Air Gun

Nozzle:
1004SS Stainless Steel Back Blow Air Nozzle, Aluminum Extension and Chip Shield

The **Soft Grip Back Blow Safety Air Gun** provides an ergonomic design with a 1/4 NPT inlet and a full grip trigger which is ideal for hours of continuous operation without fatigue.

	Air Consumption		Sound Level	Use With:
Model #	SCFM	SLPM	dBA	Inside Diameter
1204SS	4.5	127	75	1/4"-1" (6.3-25.4mm)

Model #	Description	Model #	Description
1204SS-6-CS	Soft Grip, 6" Extension, Chip Shield	1204SS-24-CS	Soft Grip, 24" Extension, Chip Shield
1204SS-12-CS	Soft Grip, 12" Extension, Chip Shield	1204SS-36-CS	Soft Grip, 36" Extension, Chip Shield



Model 1206SS-x-CS
Soft Grip Back Blow Safety Air Gun

Nozzle
1006SS Stainless Steel Back Blow Air Nozzle, Aluminum Extension and Chip Shield

The **Soft Grip Back Blow Safety Air Gun** provides an ergonomic design with a 1/4 NPT inlet and a full grip trigger which is ideal for hours of continuous operation without fatigue.

	Air Consumption		Sound Level	Use With:
Model #	SCFM	SLPM	dBA	Inside Diameter
1206SS	22	622	80	7/8"-4" (22-102mm)

Model #	Description	Model #	Description
1206SS-6-CS	Soft Grip, 6" Extension, Chip Shield	1206SS-36-CS	Soft Grip, 36" Extension, Chip Shield
1206SS-12-CS	Soft Grip, 12" Extension, Chip Shield	1206SS-48-CS	Soft Grip, 48" Extension, Chip Shield
1206SS-18-CS	Soft Grip, 18" Extension, Chip Shield	1206SS-60-CS	Soft Grip, 60" Extension, Chip Shield
1206SS-24-CS	Soft Grip, 24" Extension, Chip Shield	1206SS-72-CS	Soft Grip, 72" Extension, Chip Shield



Model 1306SS-x-CS
Heavy Duty Back Blow Safety Air Gun

Nozzle:
1006SS Stainless Steel Back Blow Air Nozzle, Aluminum Extension and Chip Shield

The **Heavy Duty Back Blow Safety Air Gun** has a larger rubber grip and a larger 3/8 NPT inlet. Durable cast aluminum gun body and full grip trigger to ease fatigue.

	Air Consumption		Sound Level	Use With:
Model #	SCFM	SLPM	dBA	Inside Diameter
1306SS	22	622	80	7/8"-4" (22-102mm)

Model #	Description	Model #	Description
1306SS-6-CS	Heavy Duty, 6" Extension, Chip Shield	1306SS-36-CS	Heavy Duty, 36" Extension, Chip Shield
1306SS-12-CS	Heavy Duty, 12" Extension, Chip Shield	1306SS-48-CS	Heavy Duty, 48" Extension, Chip Shield
1306SS-18-CS	Heavy Duty, 18" Extension, Chip Shield	1306SS-60-CS	Heavy Duty, 60" Extension, Chip Shield
1306SS-24-CS	Heavy Duty, 24" Extension, Chip Shield	1306SS-72-CS	Heavy Duty, 72" Extension, Chip Shield



Model 1219SS
Super Blast Back Blow Safety Air Gun

Nozzle
1008SS Stainless Steel Back Blow Air Nozzle and Aluminum Extension

Super Blast Back Blow Safety Air Guns provide the strongest blowing force to remove debris from the largest pipe diameters and deepest channels. These guns are sold with a 1', 3' and 6' extension, a comfortable soft grip and a spring-loaded manual valve which will shut off automatically if it is dropped.

Model #	Description
1219SS	Super Blast, 1' (305mm) Extension
1219SS-3	Super Blast, 3' (1m) Extension
1219SS-6	Super Blast, 6' (1.8m) Extension

	Air Consumption		Sound Level	Use With:
Model #	SCFM	SLPM	dBA	Inside Diameter
1219SS	57	1,614	89	2"-16" (51-406mm)

EXAIR_Cat36_25_FROMINDESIGN.indb 125 12/20/24 3:47 PM

TURBOBLAST Adjustable Safety Air Guns

TURBOBLAST Adjustable Safety Air Gun

PTEN PEOPLE'S CHOICE 2023 AWARD WINNER

NED NEW EQUIPMENT DIGEST INNOVATION AWARDS Process Equipment

EXAIR's TurboBlast® Safety Air Guns produce the highest force values available through a comfortable, safe and easy to use handle. TurboBlast Safety Air Guns with a gate valve allow for on-the-fly airflow adjustment when less or more airflow is demanded from the application. The rugged cast aluminum handle is surrounded by an over-molded soft, yet rugged elastomer grip that is UV and chemical resistant. The handle houses a low-profile trigger button, which keeps the trigger protected if dropped. An automatic air shut-off mechanism will engage if the TurboBlast gun is released or dropped, preventing injury to operators. This trigger needs just a slight squeeze to activate any of EXAIR's largest and most powerful air nozzles which can be used to remove stubborn debris, slag, flash or liquids from many harsh processes. It will accommodate EXAIR's five largest Super Air Nozzles, from 3/4 NPT to 1-1/4 NPT and 4.5 to 23 pounds of force (2.04 to 10.43 Kg). Base models include the 1' (305mm) extension, but can also be ordered with a 3' (914mm) or 6' (1829mm) extension. Nozzle guards are included for all models.



Model 1924
1 NPT female



DOWNLOAD drawings at EXAIR.com

Nozzle Material:
Zinc Aluminum alloy

Nozzle Airflow Pattern:
see Model 1112 on page 65.

Model 1924SS with Stainless Steel Nozzle also available

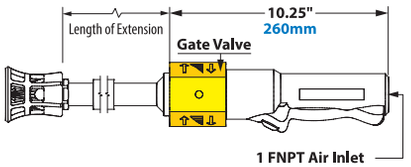

Air Consumption		Force*		Sound Level
SCFM	SLPM	lbs	Kg	dBA
91	2,577	4.5	2.04	96

OSHA 3 hour total exposure per day without hearing protection

Model 1925
1 NPT female



DOWNLOAD drawings at EXAIR.com

Nozzle Material:
Zinc Aluminum alloy

Nozzle Airflow Pattern:
see Model 1114 on page 65.

Model 1925SS with Stainless Steel Nozzle also available

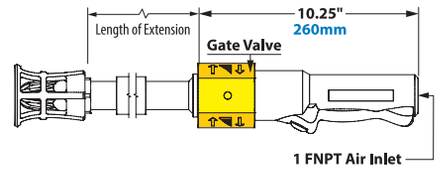

Air Consumption		Force*		Sound Level
SCFM	SLPM	lbs	Kg	dBA
135	3,823	6.6	2.99	99

OSHA 2 hour total exposure per day without hearing protection



The TurboBlast Safety Air Gun blows away scrap paper trim.

Model 1926
1 NPT female



DOWNLOAD drawings at EXAIR.com

Nozzle Material:
Zinc Aluminum alloy

Nozzle Airflow Pattern:
see Model 1116 on page 66.

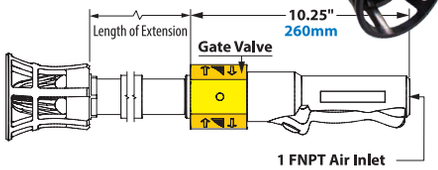

Air Consumption		Force*		Sound Level
SCFM	SLPM	lbs	Kg	dBA
188	5,324	9.4	4.26	102

OSHA 1 hour total exposure per day without hearing protection

Model 1927
1 NPT female



DOWNLOAD drawings at EXAIR.com

Nozzle Material:
Zinc Aluminum alloy

Nozzle Airflow Pattern:
see Model 1118 on page 66.

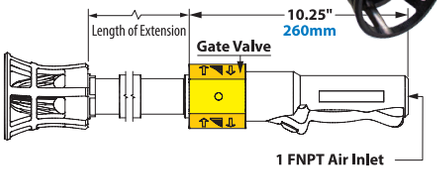

Air Consumption		Force*		Sound Level
SCFM	SLPM	lbs	Kg	dBA
300	8,495	15	6.80	106

OSHA 1/2 hour total exposure per day without hearing protection

Model 1928
1 NPT female



DOWNLOAD drawings at EXAIR.com

Nozzle Material:
Zinc Aluminum alloy

Nozzle Airflow Pattern:
see Model 1120 on page 66.

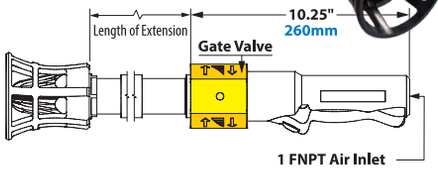

Air Consumption		Force*		Sound Level
SCFM	SLPM	lbs	Kg	dBA
460	13,026	23	10.43	109

OSHA 1/2 hour total exposure per day without hearing protection

*Force measured at 12" (305mm) from target. Sound level measured at 3' (914mm). All measurements taken at 80 PSIG (5.5 BAR).

For Technical Assistance, Call an EXAIR Application Engineer 1-800-903-9247
Toll Free FAX (866) 329-3924 • E-mail: techelp@exair.com • www.exair.com

EXAIR_Cat36_25_FROMINDESIGN.indb 126 12/20/24 3:47 PM

An INTELLIGENT COMPRESSED AIR® Product

TURBOBLAST® Safety Air Gun



Model 1914
1 NPT female

DOWNLOAD drawings at EXAIR.com



Nozzle Material:
Zinc Aluminum alloy

Nozzle Airflow Pattern:
see Model 1112 on page 65.

Model 1914SS with Stainless Steel Nozzle also available

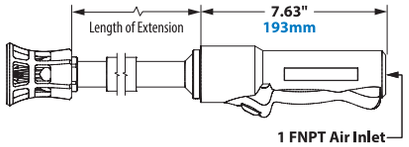

Air Consumption		Force*		Sound Level
SCFM	SLPM	lbs	Kg	dBA
91	2,577	4.5	2.04	96

OSHA 3 hour total exposure per day without hearing protection

Model 1915
1 NPT female

DOWNLOAD drawings at EXAIR.com



Nozzle Material:
Zinc Aluminum alloy

Nozzle Airflow Pattern:
see Model 1114 on page 65.

Model 1915SS with Stainless Steel Nozzle also available

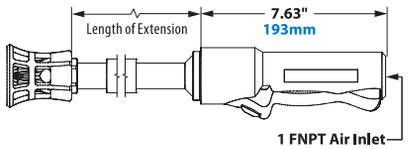

Air Consumption		Force*		Sound Level
SCFM	SLPM	lbs	Kg	dBA
135	3,823	6.6	2.99	99

OSHA 2 hour total exposure per day without hearing protection

Model 1916
1 NPT female

DOWNLOAD drawings at EXAIR.com



Nozzle Material:
Zinc Aluminum alloy

Nozzle Airflow Pattern:
see Model 1116 on page 66.

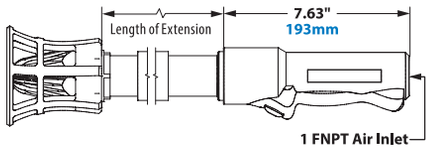

Air Consumption		Force*		Sound Level
SCFM	SLPM	lbs	Kg	dBA
188	5,324	9.4	4.26	102

OSHA 1 hour total exposure per day without hearing protection

Model 1917
1 NPT female

DOWNLOAD drawings at EXAIR.com



Nozzle Material:
Zinc Aluminum alloy

Nozzle Airflow Pattern:
see Model 1118 on page 66.

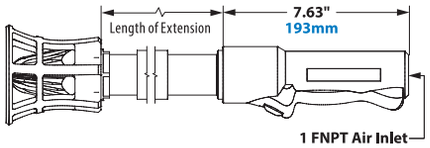

Air Consumption		Force*		Sound Level
SCFM	SLPM	lbs	Kg	dBA
300	8,495	15	6.80	106

OSHA 1/2 hour total exposure per day without hearing protection

Model 1918
1 NPT female

DOWNLOAD drawings at EXAIR.com



Nozzle Material:
Zinc Aluminum alloy

Nozzle Airflow Pattern:
see Model 1120 on page 66.

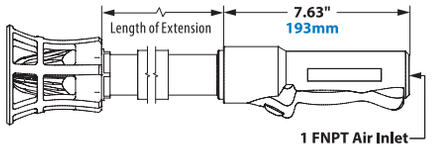

Air Consumption		Force*		Sound Level
SCFM	SLPM	lbs	Kg	dBA
460	13,026	23	10.43	109

OSHA 1/2 hour total exposure per day without hearing protection

*Force measured at 12" (305mm) from target. Sound level measured at 3' (914mm). All measurements taken at 80 PSIG (5.5 BAR).

Replacement Nozzle Guards

Model#	For TurboBlast® Safety Air Gun Model
902355	1914, 1914SS, 1924, 1924SS
902354	1915, 1915SS, 1925, 1925SS
902353	1916, 1917, 1918, 1926, 1927, 1928

Also available
Longer Extension Pipes See Below



Add a longer extension pipe to your TurboBlast Safety Air Gun.

Create the model number by adding a dash and number of the extension pipe to the TurboBlast Safety Air Gun.

1. The Model 1914 TurboBlast Safety Air Gun with a 3' extension would be a **Model 1914-3**.

1914 (TurboBlast Safety Air Gun)
\+ **-3** (3' extension)
1914-3

Aluminum Extension Pipe

All TurboBlast Safety Air Guns with Extension Pipes come fully assembled.

Model#	Model Addition# / Extension Length			
1914 or 1914SS 1924 or 1924SS 1915 or 1915SS 1925 or 1925SS 1916 or 1926 1917 or 1927 1918 or 1928	-3	36" (914mm)	-6	72" (1829mm)

EXAIR_Cat36_25_FROMINDESIGN.indb 127 12/20/24 3:47 PM

Super Blast Safety Air Guns

High Force Safety Air Guns

These hand-held versions of our Super Air Nozzle Clusters and large Super Air Nozzles provide the same strong blowing force with the added convenience of a comfortable soft grip and easy to operate spring-loaded manual valve that automatically shuts off if it is dropped. The Super Blast Safety Air Guns are ideal for long distance, wide area blowoff, cooling and drying applications. All Super Blast Safety Air Guns meet OSHA noise level and pressure requirements.

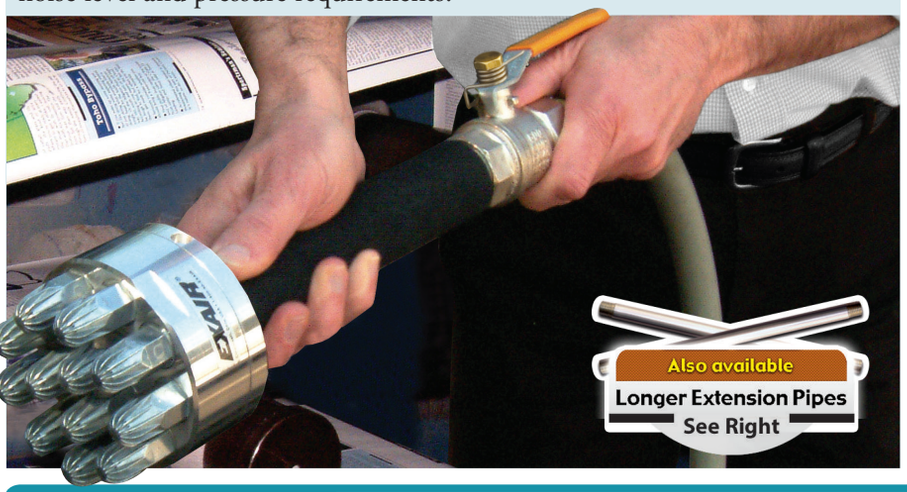

Add a longer extension pipe to your Super Blast Safety Air Gun.

Create the model number by adding a dash and number of the extension pipe to the Super Blast Safety Air Gun.

The Model 1213-4 Super Blast Safety Air Gun with a 3' extension would be a Model 1213-4-3.

1213-4 (Super Blast Safety Air Gun)
\+ **-3** (3' extension)
1213-4-3

Aluminum Extension Pipe

All Super Blast Safety Air Guns with Extension Pipes come fully assembled.

Model#	Model Addition# / Extension Length	
1213-4 3/8 NPT	-3	36" (914mm)
	-6	72" (1829mm)
1213-7 1/2 NPT	-3	36" (914mm)
	-6	72" (1829mm)
1213-12 1 NPT	-3	36" (914mm)
	-6	72" (1829mm)

Safety Air guns

Super Blast Safety Air Gun™



Model 1213-4 3/8 NPT female
Material: Nozzles - Zinc Aluminum alloy
Body - Aluminum

Airflow Pattern: see Model 1111-4 on page 67.

DOWNLOAD drawings at EXAIR.com

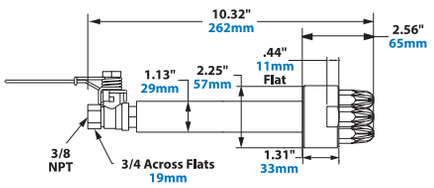

Air Consumption		Force*		Sound Level
SCFM	SLPM	lbs	Kg	dBA
56	1,585	3.2	1.45	82

* Force measured at 12" (305mm) from target
Sound level measured at 3' (914mm)
All measurements taken at 80 PSIG (5.5 BAR)



Model 1213-7 1/2 NPT female
Material: Nozzles - Zinc Aluminum alloy
Body - Aluminum

Airflow Pattern: see Model 1111-7 on page 67.

DOWNLOAD drawings at EXAIR.com

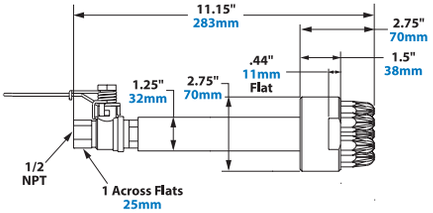

Air Consumption		Force*		Sound Level
SCFM	SLPM	lbs	Kg	dBA
98	2,773	5.7	2.59	85

* Force measured at 12" (305mm) from target
Sound level measured at 3' (914mm)
All measurements taken at 80 PSIG (5.5 BAR)



Model 1213-12 1 NPT female
Material: Nozzles - Zinc Aluminum alloy
Body - Aluminum

Airflow Pattern: see Model 1111-12 on page 67.

DOWNLOAD drawings at EXAIR.com

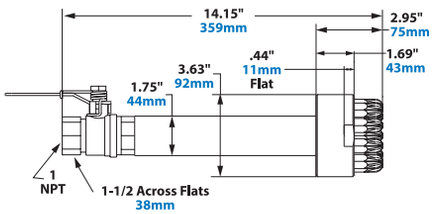

Air Consumption		Force*		Sound Level
SCFM	SLPM	lbs	Kg	dBA
168	4,754	9.8	4.45	89

* Force measured at 12" (305mm) from target
Sound level measured at 3' (914mm)
All measurements taken at 80 PSIG (5.5 BAR)

EXAIR_Cat36_25_FROMINDESIGN.indb 128 12/20/24 3:47 PM

An INTELLIGENT COMPRESSED AIR® Product

Super Blast Safety Air Gun™



Model 1214 3/4 NPT female
Material: Nozzles - Zinc Aluminum alloy
Airflow Pattern: see Model 1112 on page 65.
Model 1214SS with Stainless Steel Nozzle also available

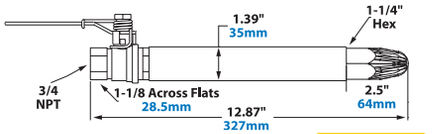

DOWNLOAD drawings at EXAIR.com

Air Consumption		Force*		Sound Level
SCFM	SLPM	lbs	Kg	dBA
91	2,577	4.5	2.04	96

* Force measured at 12" (305mm) from target
Sound level measured at 3' (914mm)
All measurements taken at 80 PSIG (5.5 BAR)
OSHA 3 hour total exposure per day without hearing protection



Model 1215 1 NPT female
Material: Nozzle - Zinc Aluminum alloy
Airflow Pattern: see Model 1114 on page 65.
Model 1215SS with Stainless Steel Nozzle also available

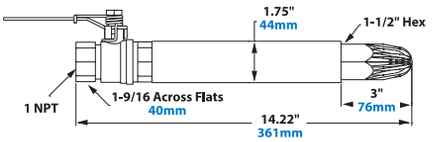

DOWNLOAD drawings at EXAIR.com

Air Consumption		Force*		Sound Level
SCFM	SLPM	lbs	Kg	dBA
135	3,823	6.6	2.99	99

* Force measured at 12" (305mm) from target
Sound level measured at 3' (914mm)
All measurements taken at 80 PSIG (5.5 BAR)
OSHA 2 hour total exposure per day without hearing protection



The 3' extension on the Model 1215-3 Super Blast Safety Air Gun helps an operator provide maximum blow off force to remote, tight or difficult to access areas.



Model 1216 1-1/4 NPT female
Material: Nozzle - Zinc Aluminum alloy
Airflow Pattern: see Model 1116 on page 66.

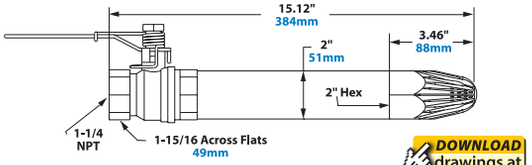

DOWNLOAD drawings at EXAIR.com

Model #	Air Consumption		Force*		Sound Level
Model #	SCFM	SLPM	lbs	Kg	dBA
1216	188	5,324	9.4	4.26	102
1217	300	8,495	15	6.80	106
1218	460	13,026	23	10.43	109

* Force measured at 12" (305mm) from target
Sound level measured at 3' (914mm)
All measurements taken at 80 PSIG (5.5 BAR)
Model 1216 OSHA 1 hour total exposure per day without hearing protection
Model 1217 and 1218 OSHA 1/2 hour total exposure per day without hearing protection



Model 1217 1-1/4 NPT female
Material: Nozzle - Zinc Aluminum alloy
Airflow Pattern: see Model 1118 on page 66.



Model 1218 1-1/4 NPT female
Material: Nozzle - Zinc Aluminum alloy
Airflow Pattern: see Model 1120 on page 66.

Add a longer extension pipe to your Super Blast Safety Air Gun.

Create the model number by adding a dash and number of the extension pipe to the Super Blast Safety Air Gun.

Example:

The Model 1214 Super Blast Safety Air Gun with a 3' extension would be a Model 1214-3.

1214 (Super Blast Safety Air Gun)
\+ **-3** (3' extension)
1214-3

Aluminum Extension Pipe

All Super Blast Safety Air Guns with Extension Pipes come fully assembled.

Model#	Model Addition # / Extension Length			
1214	-3	36" (914mm)	-6	72" (1829mm)
1214SS	-3	36" (914mm)	-6	72" (1829mm)
1215	-3	36" (914mm)	-6	72" (1829mm)
1215SS	-3	36" (914mm)	-6	72" (1829mm)
1216	-3	36" (914mm)	-6	72" (1829mm)
1217	-3	36" (914mm)	-6	72" (1829mm)
1218	-3	36" (914mm)	-6	72" (1829mm)

EXAIR_Cat36_25_FROMINDESIGN.indb 129 12/20/24 3:47 PM

Static Eliminators

Eliminate static and dust!

Neutralize and clean at distances up to 20 feet!





What Is Static?

Material such as paper, plastic or textiles normally contain an equal number of positive and negative charges – that is, they are electrically balanced. Friction can disturb this balance, causing the material to become electrically charged.

The electrical charge (static) will exert a force on nearby charged objects or a grounded conductor. Among the problems caused by this force are:



- Dust clinging to product
- Product clinging to itself, rollers, machine beds or frames
- Materials tearing, jamming or curling
- Sheet feeding problems
- Hazardous sparks or shocks

Charged conductors (like metals) discharge completely when grounded. Insulators (like plastics) don't conduct electricity and can't discharge when grounded. Grounded brushes or tinsel often have little effect on these surfaces.

When aiming EXAIR's Model 7905 Static Meter at a single plastic surface, it is common to measure many voltages across the same surface. The higher the voltage measures, the stronger the static charge or force at that point. It is also possible for some voltages to have opposite polarities (positive or negative) which determines if two insulators will attract or repel one another.

EXAIR's Gen4 static eliminators (also called ionizers) can eliminate static charge. These shockless ionizers are electrically powered and produce a bulk of positive and negative ions. The charged surface attracts the appropriate number of positive or negative ions from the ionizer to become neutral (discharged).

Why Choose Static Eliminators and GEN4 Static Eliminator Systems?

EXAIR offers systems for total static control. When static is a problem on moving webs, sheet stock, three dimensional parts, extrusions or packaging, EXAIR has a solution. Our Gen4 static eliminators have undergone independent laboratory tests to certify they meet the rigorous safety, health and environmental standards of the USA, European Union and Canada that are required to attain the CE and UL marks. They are also RoHS compliant. Every Gen4 static eliminator offers:

- An armored high voltage cable to protect against abrasion, cuts, splits and other damage from the environment.
- Single wire, integrated ground design which eliminates the need for a separate ground connection
- Electromagnetic shielding in all cables to protect sensitive electronics
- Selectable Voltage (115V or 230VAC) power supplies with rugged stainless steel connections and integrated fuse protection on the primary input voltage. Available in 2 or 4 outlet versions.



A small Model 112203 3" (76mm) Gen4 Super Ion Air Knife System eliminates contaminants from syringes prior to packaging.

EXAIR_Cat36_25_FROMINDESIGN.indb 130 12/20/24 3:47 PM

GEN4 Static Eliminators With Air

Combining our engineered airflow products with ionizers gives us the ability to eliminate a static charge quickly and from great distances. Laminar flow airstreams make it possible to blow away any contaminants and eliminate the charge that attracts them. They are ideal for:

- Hard to reach places or obstructed surfaces
- Product moving at high speeds
- Surfaces with an extremely high charge

Compressed air consumption and noise are minimized while providing force that can be adjusted from a "blast" to a "breeze". Tests show these ionizers positioned two feet (610mm) away from a charged surface to be as effective as a Gen4 Ionizing Bar without air delivery positioned one-half inch (13mm) from the surface.

The **Gen4 Super Ion Air Knife** provides 34% better static elimination than previous Super Ion Air Knife models and the best performance of all EXAIR ionizers. It uses our Super Air Knife (40:1 air amplification) to deliver a uniform sheet of ionized air effective up to 20 feet (6.1m) away.

The **Gen4 Standard Ion Air Knife** performance is improved by 30% over previous Standard Ion Air Knives. It delivers a sheet of ionized air to the surface with 30:1 air amplification ratio that is effective, but less efficient than the Gen4 Super Ion Air Knife.

The **Gen4 Super Ion Air Wipe** clamps around the part and creates a ring of ionized airflow. It neutralizes and cleans continuous moving surfaces.

The **Gen4 Ion Air Cannon** uses our Super Air Amplifier (22:1 air amplification) to provide a focused, conical airstream that is capable of removing the charge up to 15 feet (4.6m) away.

The **Gen4 Ion Air Gun** uses our High Velocity Air Jet (5:1 air amplification) to provide a narrow beam of ionized airflow. This hand-held static eliminator is rugged for industrial use and has incredibly fast static decay rates.

The **Gen4 Ion Air Jet** uses our High Velocity Air Jet (5:1 air amplification), and is an effective spot cleaner. Available for permanent mount or with flexible Stay Set Hose, this ionizer is the ideal way to focus an ionized airflow at confined areas.

GEN4 Static Eliminators Without Air

In some situations, even the smallest amount of airflow can disturb the product. This is especially true for lightweight materials. EXAIR manufactures two styles of ionizers for these critical applications.

Gen4 Ionizing Bars perform 25% better than previous Ionizing Bars and are ideal for relatively flat materials, where the bar can be mounted within 4" of the product surface.

The **Gen4 Ionizing Point** is effective for spot neutralization. The compact size makes it ideal for winding or slitting operations. It can also be mounted through a duct to neutralize static charges due to moving air or materials.



A Model 8006 6" (152mm) Gen4 Ionizing Bar eliminates the static charge causing packing peanuts to cling.

Special Static Eliminators

EXAIR manufactures static eliminators suited to specific application requirements. This special ionizer *(shown bottom right)* was developed for the automotive industry. This air amplifier and ionizer combination is used to dry water based paints on car bodies while eliminating the possibility of a static charge that might attract dust or other contaminants.

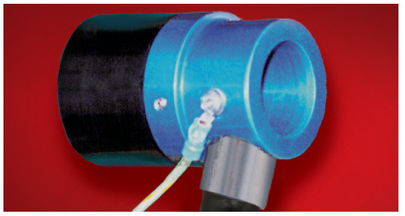

This special ionizer dries water based paint on car bodies and eliminates any static problems.

If you have special requirements, please contact an Application Engineer to discuss the application.

EXAIR_Cat36_25_FROMINDESIGN.indb 131 12/20/24 3:47 PM

GEN4® Super Ion Air Knife™

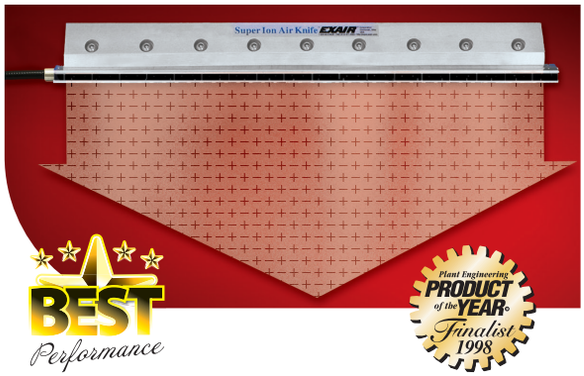

Powerful static eliminator prevents jamming, tearing, shocks and dust up to 20' away!

Uses The Super Air Knife

- ☑ Low Air Consumption!
- ☑ Surprisingly Quiet!
- ☑ Uniform Airflow!
- ☑ End and Bottom Air Inlets!



What Is The GEN4 Super Ion Air Knife?

Compared to our previous version, EXAIR's Gen4 Super Ion Air Knife offers 34% improved performance at low pressures allowing you to achieve the same or better results, which saves compressed air and money. Gen4 Super Ion Air Knives remove static electricity from plastics, webs, sheet stock and other product surfaces where tearing, jamming or hazardous shocks are a problem. The laminar sheet of air sweeps surfaces clean of static, particulate, dust and dirt. Production speeds, product quality, and surface cleanliness can improve dramatically.

Why The GEN4 Super Ion Air Knife?

The Gen4 Super Ion Air Knife floods an area or surface with static eliminating ions - up to 20 feet (6.1m) away. A uniform airflow across its length will not cause misalignments to critical surfaces such as webs. Force can be adjusted from a "blast" to a "breeze". The Gen4 Super Ion Air Knife is shockless and has no moving parts. **It also requires only 3.7 SCFM of compressed air per foot of length at 5 PSIG (105 SLPM per 300mm of length at 0.3 BAR).** Sound level is surprisingly quiet at 50 dBA for most applications.

Applications

- Web cleaning
- Molding machinery
- Sheeters and trimmers
- Cleaning parts
- Pre-paint dust removal
- Shrink wrappers
- Package cleaning
- Bag opening/ fill operations
- Printing equipment

Advantages

- Up to 34% improved performance
- Rugged metal armored and electromagnetically shielded cable
- Integrated ground eliminates additional ground connection
- Durable stainless steel connections to Power Supply
- Low air consumption
- Uniform airflow across entire length
- Quiet
- Effective up to 20 feet (6.1m)
- Shockless, non-radioactive
- Compact, rugged, easy to install
- Unlimited system lengths of uninterrupted airflow
- Low maintenance
- UR/CE
- EMC Compliant
- Modular power supply cable eases connections and routing

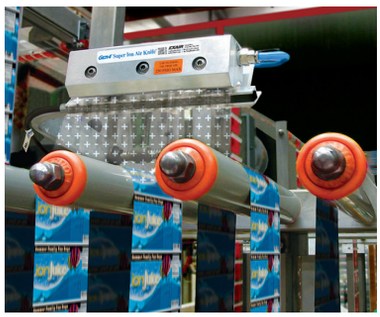

The Gen4 Super Ion Air Knife eliminates the static charge on labels being applied to PET soft drink bottles.

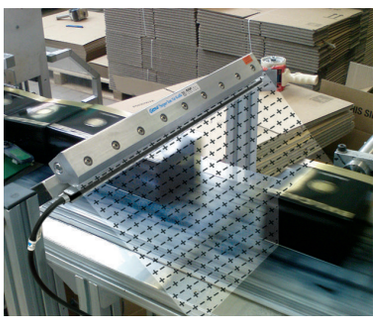

The Model 112118 18" (457mm) Gen4 Super Ion Air Knife System eliminates dust from body care products prior to sealing the boxes in cellophane.



Bumpers, car bodies and fascia are cleaned of dust and fibers prior to painting.

EXAIR_Cat36_25_FROMINDESIGN.indb 132 12/20/24 3:47 PM

How The GEN4 Super Ion Air Knife Works

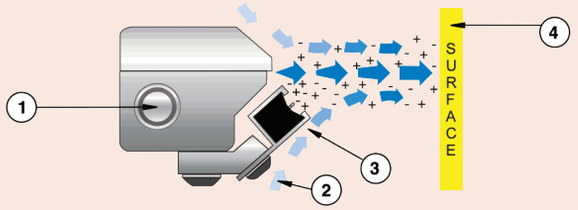

Compressed air flows through an inlet (1) into the plenum chamber of the Gen4 Super Ion Air Knife. The flow is directed to a precise, slotted orifice. As the primary airflow exits, it creates a uniform sheet of air across the entire length that immediately pulls in surrounding room air (2). An electrically powered Gen4 Ionizing Bar (3) fills the curtain of air with positive and negative charges. The airstream delivers these static eliminating ions to the product surface (4) where it instantly neutralizes static and cleans off dust and other particulates.

Added Features

- Compressed air inlets are provided on each end and the bottom of the Gen4 Super Ion Air Knife. Unlimited lengths available up to 118" (3m).
- Thicker shims can be installed easily if additional hard-hitting velocity is required.
- Primary air does not impact any surface of the Gen4 Super Ion Air Knife which keeps the sound level low.
- Insertion molded emitter points eliminate potential dirt accumulation that could degrade performance or eventually short the ionizing bar.
- Emitter points are sharp, durable stainless steel.
- The high voltage cable is armored to resist cuts and abrasion and has integral grounding, which eliminates an additional connection. The threaded bayonet connector is fully assembled and ready to use.
- Electromagnetically shielded cable protects sensitive electronics.
- Gen4 Super Ion Air Knife Kits, which include all components necessary for operation, are available.

GEN4 Super Ion Air Knife Performance

Pressure Supply		Air Consumption*		Sound Level	Dissipates 5kV**
PSIG	BAR	SCFM	SLPM	dBA	SECONDS
5	0.3	3.7	105	39	0.40
10	0.7	5.5	156	51	0.33
20	1.4	13.2	372	57	0.26
40	2.8	20.4	576	61	0.23
60	4.1	27.6	780	65	0.21
80	5.5	34.8	984	69	0.20
100	6.9	42.0	1,188	72	0.18

* per foot (305mm) of length
**6" (152mm) from target
For airflow pattern, see Super Air Knife page 24

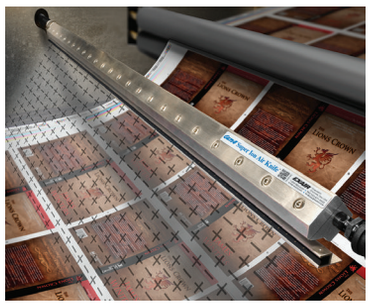

The Model 112048 48" (1219mm) Gen4 Super Ion Air Knife neutralizes the static electricity and cleans the surface of the paper.

GEN4 Super Ion Air Knife Dimensions

DOWNLOAD drawings at EXAIR.com

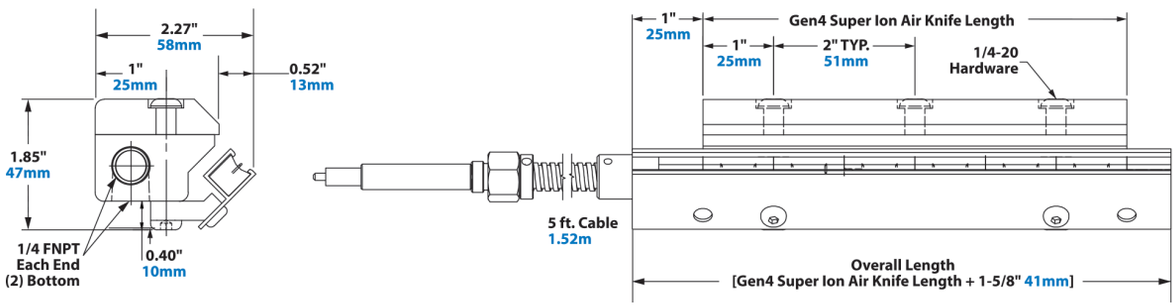

Enhanced Performance and Reliability

Gen4 Ionizing Bars are most effective with an air delivery system. That allows the static eliminating ions to reach farther with greater coverage. When used by itself, a bar must be mounted within 4 inches of the charged surface to fully neutralize it. This close mounting is impossible when the static is generated in confined areas of a machine. Ion coverage is minimal on oddly configured parts or when high production speeds are involved.

The right type of air delivery is critical. Blowers produce an uneven, turbulent airstream that can cause the positive and negative ions to recombine before hitting the charged material. They are large, suffer mechanical wear and provide limited airflow control. The compact Gen4 Super Ion Air Knife uses a small amount of compressed air to produce a balanced, laminar sheet of air to carry the ions to the charged surface, even when it is far away. Flow and force are easily controlled and there are no moving parts to wear out.

EXAIR_Cat36_25_FROMINDESIGN.indb 133 12/20/24 3:47 PM

GEN4® Super Ion Air Knife

GEN4 Super Ion Air Knife Specifications

The Gen4 Super Ion Air Knife is available in standard lengths of 3", 6", 9", 12", 18", 24", 30", 36", 42", 48", 54", 60", 72", 84", 96" and 108" (76, 152, 229, 305, 457, 610, 762, 914, 1067, 1219, 1372, 1524, 1829, 2134, 2438 and 2743mm). **Special lengths and unlimited system lengths are available *(please contact our factory)*.** A 5' (1.52m) armored and electromagnetically shielded power cable with ground and assembled bayonet connector are included.

EXAIR Model 7960 or 7961 Gen4 Power Supply (5kV) is required for Super Ion Air Knife operation. Power supplies are equipped with a modular 6' (1.83m) power cord, lighted power switch integrated fuse on the primary and (2) or (4) high voltage outlets.

Certifications: Gen4 Ionizing Bars and Gen4 Power Supplies are UL Component Recognized to U.S. and Canadian safety standards, and are CE, EMC and RoHS compliant.

Compressed Air: 1/4 NPT inlets are provided on each end and the bottom.

Electrical: For use with Model 7960 or 7961 5 kVrms, 5 milliamperes (max.) power supply.

Electrical Hazard: Gen4 Ionizing Bars are shockless (less than 40 microamperes short circuited).

Do not use near flammable materials or gases.

Materials of Construction

Metal Parts: Aluminum

Plastic Parts: UL rated 94 HB

Emitters: Stainless Steel

Maximum Ambient Temperature: 165°F (74°C)

Shims: Thicker shims can be installed easily if additional hard-hitting velocity is required. For more information, see "shim sets" on on page 25.



Model 9060 Universal Air Knife Mounting System provides secure, precise positioning for the Gen4 Super Ion Air Knife.
See page 29 for details.

Static Meter

Static Meter

Locate the source of the static problem!



Digital Static Meter Locates The Source!

The **Model 7905 Digital Static Meter** allows easy one-hand static measurements. In most cases, the highest voltage reading will indicate the source of the static problem. Sensitive and responsive, it indicates the surface voltage and polarity on objects up to ±20 kV when measured one inch (25mm) away.

The Digital Static Meter features a push button "hold" for readings, a low battery indicator and an automatic "power off". A "zero" button to zero the instrument ensures an accuracy of ±5% of the reading when it is one inch (25mm) from the charged surface.



The Model 7905 Digital Static Meter comes complete with a hard-shell plastic case and a 9 volt battery. Certification of the accuracy and calibration traceable to NIST (National Institute of Standards and Technology) is also included. Calibration is available.

EXAIR_Cat36_25_FROMINDESIGN.indb 134 12/20/24 3:47 PM

Dust Removal From Car Bodies

The Problem: Car bodies are primer coated, then sanded before entering the paint booth. Priming dust, attracted to the car body by a static charge, creates imperfections that are captured and magnified in the painting process.

The Solution: An "archway" of **Model 112024 24" (610mm) Gen4 Super Ion Air Knives was installed upstream of the paint booth.** As the car bodies pass through, **a high velocity sheet of ionized air neutralizes the static charge to release the dust and blow it toward a collection system.**

Comment: Non-turbulent airflow was the reason this cleaning system worked so well. The compact Gen4 Super Ion Air Knife has the ability to move the bulk of the static eliminating ions to the car surface. It can be adjusted from a gentle breeze of air to a pounding blast, with instant "on/off " capability. Uniform airflow across the entire length assures that all car body surfaces are neutralized and dust free. Best of all, the Gen4 Super Ion Air Knife is easy on the compressed air system and workers' ears. They use much less compressed air than standard blowoffs and are around 69 dBA in most applications.

EXAIR's EFC *(shown on page 7)* is an electronic flow control for compressed air. It can sense when there is no car present and will automatically turn off the compressed air until the next car is moved into position. It is a perfect addition to this type of application.

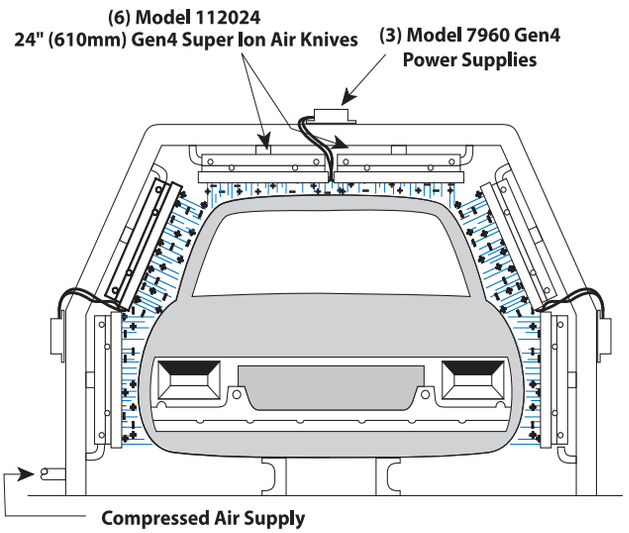

A Manufacturer Of Perfumes And Fragrances Eliminates Dust From Their Packages

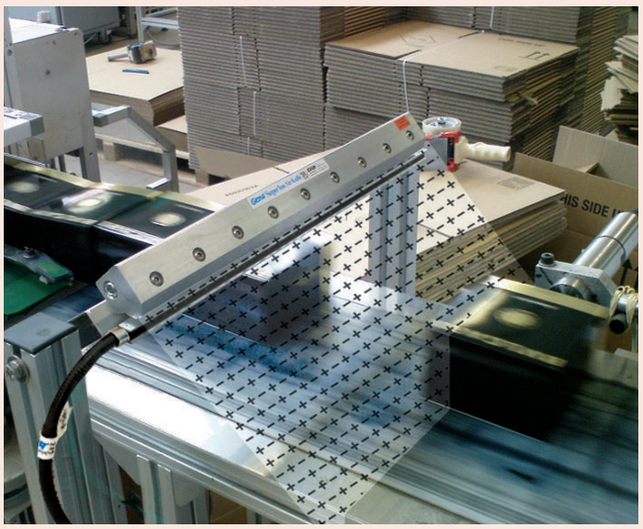

The Problem: A manufacturer of perfumes and fragrances had a problem with the packaging of their fine perfumes. The conveyor belt used to transport the boxes to the cellophane sealer rubbed against the box surface and induced a sizable static electricity charge on it that made it a "dust magnet". The cardboard dust and particulates in their facility would land on the perfume boxes that were sent through the cellophane sealer. The trapped dust gave a poor appearance to the finished package. The company refused to let the boxes with the poor appearance leave their facility. Attempts to clean them using ordinary air guns produced poor results.

The Solution: The company installed a **Model 112018 18" (457mm) Gen4 Super Ion Air Knife** prior to the box entering the sealer. The charged surface was completely neutralized with the ionized airflow and the dust and particulates were blown away. The cellophane covered boxes were perfectly clean.

Comment: EXAIR's Gen4 Super Ion Air Knife is used for applications just like these where appearance is vital to the sale of the product. The Gen4 Super Ion Air Knife is commonly used for pre-package cleaning, bag opening and filling operations, cleaning automobile bodies prior to painting, web cleaning, as well as eliminating jams, tears and those painful static electricity shocks.

EXAIR_Cat36_25_FROMINDESIGN.indb 135 12/20/24 3:47 PM

GEN4® Super Ion Air Knife

Cleaning Porcelain Dishes Prior To Glazing



The Problem: A manufacturer of fine porcelain dinnerware products had a problem with dust ruining the finish on their dishes. Dust particles were adhering to the surface of the dishes which created imperfections that were greatly magnified once the glaze was applied. Prior to glazing, they made attempts to blow the dust particles away using ordinary air nozzles which had little effect, if any. There were abundant rejects.

The Solution: They installed (3) **Model 112018 18" (457mm) Gen4 Super Ion Air Knives** to surround each dish, neutralize the static charge and remove the dust particles. Any airborne particulate was immediately vacuumed away by their dust collection system. The dishes were completely smooth to the touch with no imperfections.

Comment: A similar problem used to plague automotive manufacturers. The static charge generated by the automobile body tack off operation would cause the car body to attract stray particles of priming dust. Once the paint hits a dust particle, it sticks out like a sore thumb and ruins an otherwise perfect robotic paint job. The **Gen4 Super Ion Air Knife** is ideal here since it neutralizes the charge and blows the dust away (in the direction of their dust collection system). To minimize compressed air use for these applications, we recommend the use of an EXAIR EFC Electronic Flow Control that automatically turns off the compressed air when no part is present.

GEN4 Super Ion Air Knife Models

Gen4 Super Ion Air Knife - includes the Super Air Knife and Gen4 Ionizing Bar assembly.

Gen4 Super Ion Air Knife Systems - include a Gen4 Super Ion Air Knife and Model 7960 Gen4 Power Supply (115V, 230V, 50/60 Hz)

Gen4 Super Ion Air Knife Kits - include a Gen4 Super Ion Air Knife, Model 7960 Gen4 Power Supply, shim set, filter separator and pressure regulator (with coupler).

Gen4 Deluxe Super Ion Air Knife Kits - include a Gen4 Super Ion Air Knife, Model 7960 Gen4 Power Supply, EFC, Universal Mounting System, shim set, filter separator and pressure regulator (with coupler).

Length	Gen4 Super Ion Air Knife Model	Gen4 Super Ion Air Knife Systems Model	Gen4 Super Ion Air Knife Kits Model	Gen4 Deluxe Super Ion Air Knife Kits Model
3" (76mm)	112003	112103	112203	112203DX
6" (152mm)	112006	112106	112206	112206DX
9" (229mm)	112009	112109	112209	112209DX
12" (305mm)	112012	112112	112212	112212DX
18" (457mm)	112018	112118	112218	112218DX
24" (610mm)	112024	112124	112224	112224DX
30" (762mm)	112030	112130	112230	112230DX
36" (914mm)	112036	112136	112236	112236DX
42" (1067mm)	112042	112142	112242	112242DX
48" (1219mm)	112048	112148	112248	112248DX
54" (1372mm)	112054	112154	112254	112254DX
60" (1524mm)	112060	112160	112260	112260DX
72" (1829mm)	112072	112172	112272	112272DX
84" (2134mm)	112084	112184	112284	112284DX
96" (2438mm)	112096	112196	112296	112296DX
108" (2743mm)	1120108	1121108	1122108	1122108DX



Kits include the Gen4 Super Ion Air Knife, shim set, Model 7960 Gen4 Power Supply, filter separator and pressure regulator (with coupler).

Universal Air Knife Mounting System

EXAIR's Universal Air Knife Mounting System allows easy positioning of all EXAIR Air Knives.

See page 29 for details.



EXAIR_Cat36_25_FROMINDESIGN.indb 136 12/20/24 3:47 PM

GEN4 Long Super Ion Air Knives

EXAIR offers long Gen4 Super Ion Air Knives in 60" (1524mm), 72" (1829mm), 84" (2134mm), 96" (2438mm) and 108" (2743mm) lengths that are shipped fully assembled. All components have been properly sized to obtain the best performance from the Gen4 Super Ion Air Knife.

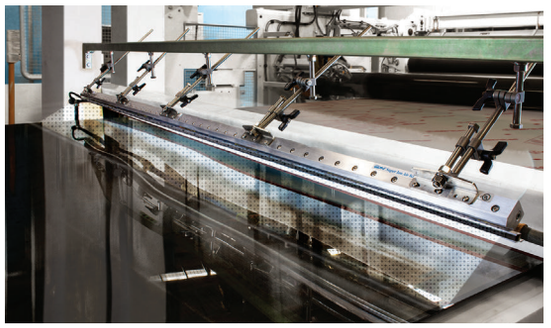

This 96" Long Gen4 Super Ion Air Knife cleans an acrylic sheet before protective wrap is applied.

GEN4 Super Ion Air Knife Models with Plumbing Kit

Gen4 Super Ion Air Knife with Plumbing Kit - includes Super Air Knife, plumbing kit and Gen4 Ionizing Bar installed.

Gen4 Super Ion Air Knife Systems with Plumbing Kit - include Super Air Knife, plumbing kit and Gen4 Ionizing Bar installed. Includes Model 7960 Gen4 Power Supply (115V, 230V, 50/60Hz).

Gen4 Super Ion Air Knife Kits with Plumbing Kit - include Super Air Knife, plumbing kit and Gen4 Ionizing Bar installed. Also includes Model 7960 Gen4 Power Supply (115V, 230V, 50/60Hz), shim set, filter separator and pressure regulator (with coupler).

Length	Gen4 Super Ion Air Knife Model	Gen4 Super Ion Air Knife Systems Model	Gen4 Super Ion Air Knife Kits Model
24" (610mm)	112024PKI	112124PKI	112224PKI
30" (762mm)	112030PKI	112130PKI	112230PKI
36" (914mm)	112036PKI	112136PKI	112236PKI
42" (1067mm)	112042PKI	112142PKI	112242PKI
48" (1219mm)	112048PKI	112148PKI	112248PKI
54" (1372mm)	112054PKI	112154PKI	112254PKI
60" (1524mm)	112060PKI	112160PKI	112260PKI
72" (1829mm)	112072PKI	112172PKI	112272PKI
84" (2134mm)	112084PKI	112184PKI	112284PKI
96" (2438mm)	112096PKI	112196PKI	112296PKI
108" (2743mm)	1120108PKI	1121108PKI	1122108PKI

Special length Gen4 Super Ion Air Knives and unlimited system lengths are available.

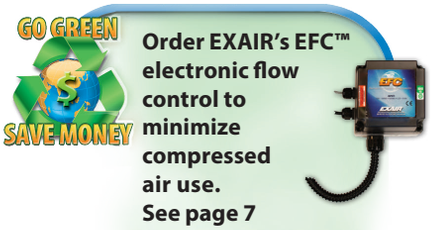

Order EXAIR's EFC™ electronic flow control to minimize compressed air use. See page 7 for details.

Static Eliminators

Accessories and Components

Model #	Description	Model #	Description
7960	2 Outlet Selectable Voltage Gen4 Power Supply (115V, 230V, 50/60Hz)	7905	Static Meter
7961	4 Outlet Selectable Voltage Gen4 Power Supply (115V, 230V, 50/60Hz)	9001	Auto Drain Filter Separator, 3/8 NPT, 65 SCFM (1,841 SLPM)
8003	3" (76mm) Gen4 Ionizing Bar Only	9032	Auto Drain Filter Separator, 1/2 NPT, 90 SCFM (2,549 SLPM)
8006	6" (152mm) Gen4 Ionizing Bar Only	9002	Auto Drain Filter Separator, 3/4 NPT, 220 SCFM (6,230 SLPM)
8009	9" (229mm) Gen4 Ionizing Bar Only	9066	Auto Drain Filter Separator, 1-1/4 NPT, 400 SCFM (11,327 SLPM)
8012	12" (305mm) Gen4 Ionizing Bar Only	9005	Oil Removal Filter, 3/8 NPT, 15-37 SCFM (425-1,048 SLPM)
8018	18" (457mm) Gen4 Ionizing Bar Only	9006	Oil Removal Filter, 3/4 NPT, 50-150 SCFM (1,416-4,248 SLPM)
8024	24" (610mm) Gen4 Ionizing Bar Only	9008	Pressure Regulator with Gauge, 1/4 NPT, 50 SCFM (1,416 SLPM)
8030	30" (762mm) Gen4 Ionizing Bar Only	9033	Pressure Regulator with Gauge, 1/2 NPT, 100 SCFM (2,832 SLPM)
8036	36" (914mm) Gen4 Ionizing Bar Only	9009	Pressure Regulator with Gauge, 3/4 NPT, 220 SCFM (6,230 SLPM)
8042	42" (1067mm) Gen4 Ionizing Bar Only	9067	Pressure Regulator with Gauge, 1-1/4 NPT, 600 SCFM (16,990 SLPM)
8048	48" (1219mm) Gen4 Ionizing Bar Only	9020	Solenoid Valve, 120V, 50/60Hz, 1/4 NPT, 40 SCFM (1,133 SLPM)
8054	54" (1372mm) Gen4 Ionizing Bar Only	9034	NEMA 4/4X Solenoid Valve, 120V, 50/60Hz, 1/2 NPT, 100 SCFM (2,832 SLPM)
8060	60" (1524mm) Gen4 Ionizing Bar Only	9035	NEMA 4/4X Solenoid Valve, 240V, 50/60Hz, 1/2 NPT, 100 SCFM (2,832 SLPM)
8072	72" (1829mm) Gen4 Ionizing Bar Only	9036	NEMA 4/4X Solenoid Valve, 120V, 50/60Hz, 3/4 NPT, 200 SCFM (5,664 SLPM)
8084	84" (2134mm) Gen4 Ionizing Bar Only	9037	NEMA 4/4X Solenoid Valve, 240V, 50/60Hz, 3/4 NPT, 200 SCFM (5,664 SLPM)
8096	96" (2438mm) Gen4 Ionizing Bar Only	9065	NEMA 4/4X Solenoid Valve, 24VDC, 1 NPT, 350 SCFM (9,911 SLPM)
80108	108" (2743mm) Gen4 Ionizing Bar Only		

EXAIR_Cat36_25_FROMINDESIGN.indb 137 12/20/24 3:47 PM

GEN4® Standard Ion Air Knife™

A sheet of ionized air is an effective way to eliminate static and clean parts or materials!



The Model 8218 18" (457mm) Gen4 Standard Ion Air Knife System showers parts with static eliminating ions to prevent personnel shocks.

GOOD Performance

What Is The GEN4 Standard Ion Air Knife?

When compared to our previous model, EXAIR's Gen4 Standard Ion Air Knife offers 30% improved performance at low pressures allowing you to achieve the same or better results, which saves compressed air and money. They are an effective way to eliminate static. Like its "super" counterpart, the Gen4 Standard Ion Air Knife removes static electricity from plastics, webs, sheet stock and other surfaces where tearing, jamming or hazardous shocks are a problem.



This ionizer uses our original Standard Air Knife to carry ions from a Gen4 Ionizing Bar to the charged surface - up to 20 feet (6.1m) away. Though not as efficient as our Gen4 Super Ion Air Knife (40:1 air amplification), the Gen4 Standard Ion Air Knife (30:1 air amplification) still provides fast static decay and strong blowoff force for cleaning. Force can be adjusted from a "blast" to a "breeze". The Gen4 Standard Ion Air Knife is shockless and has no moving parts.

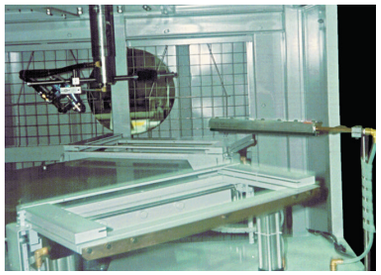

A Model 8212 12" (305mm) Gen4 Standard Ion Air Knife System cleans metal frames prior to powder coating.

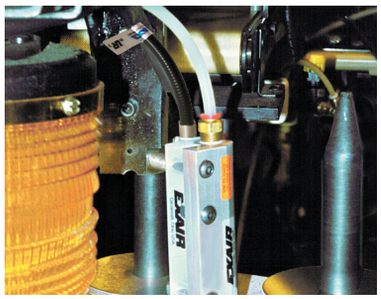

A Model 8103 3" (76mm) Gen4 Standard Ion Air Knife removes dust from computer hard disks prior to assembly.

Why The GEN4 Standard Ion Air Knife?

When air consumption and noise level are not critical to the application, the lower cost makes the Gen4 Standard Ion Air Knife a good choice. (To compare the Gen4 Super Ion Air Knife and Gen4 Standard Ion Air Knife, see the performance tables on pages 133 and 139.)

Compressed air inlets are provided on each end of the Gen4 Standard Ion Air Knife. For long spans, multiple Gen4 Standard Ion Air Knives can be mounted end-to-end. This produces an air gap at the connection end of about 2" (51mm). (If no air gap is desired, use the Gen4 Super Ion Air Knife.) Special length Gen4 Ionizing Bars up to 119" (3.02m) are available for multiple air knife applications.

Applications

- Web cleaning
- Molding machinery
- Sheeters and trimmers
- Cleaning parts
- Pre-paint dust removal
- Shrink wrappers
- Package cleaning
- Bag opening/fill operations
- Printing equipment

Advantages

- 30% improved performance
- Rugged metal armored and electromagnetically shielded cable
- Integrated ground eliminates additional ground connection
- Durable stainless steel connections to Power Supply
- Reduced air consumption
- 30:1 air amplification
- Low noise level
- Effective up to 20 feet (6.1m)
- Shockless, non-radioactive
- Compact, rugged, easy to install
- Unlimited system lengths
- Low maintenance
- Variable force and flow

EXAIR_Cat36_25_FROMINDESIGN.indb 138 12/20/24 3:47 PM

GEN4 Standard Ion Air Knife Performance

Pressure Supply		Air Consumption*		Sound Level	Dissipates 5kV**
PSIG	BAR	SCFM	SLPM	dBA	SECONDS
5	0.3	6	170	66	0.38
10	0.7	8	227	68	0.28
20	1.4	16	453	69	0.29
40	2.8	24	679	78	0.21
60	4.1	32	906	84	0.21
80	5.5	41	1,160	87	0.21
100	6.9	49	1,387	90	0.21

* per foot (305mm) of length
** 6" (152mm) from target.
For airflow pattern, see Standard Air Knife page 35.
Note: Performance on lengths over 36" will vary.
Contact an Application Engineer for details.



Kits include the Gen4 Standard Ion Air Knife, shim set, Model 7960 Gen4 Power Supply, filter separator and pressure regulator (with coupler).

GEN4 Standard Ion Air Knife Specifications

The Gen4 Standard Ion Air Knife is available in standard lengths of 3", 6", 9", 12", 18", 24", 30", 36", 42" and 48" (76, 152, 229, 305, 457, 610, 762, 914, 1067 and 1219mm). **Special lengths up to 48" (1219mm) and unlimited system lengths are available *(please contact our factory).*** A 5' (1.52m) armored and shielded power cable with ground and assembled bayonet connector are included. **EXAIR Model 7960 or 7961 Gen4 Power Supply (5kV) is required for Standard Ion Air Knife operation.** See page 151 for details.

Certifications: Gen4 Ionizing Bars and Gen4 Power Supplies are UL Component Recognized to U.S. and Canadian safety standards, and are CE and RoHS compliant.

Compressed Air: 1/4 NPT inlets are provided on each end.

Electrical: For use with 5 kVrms, 5 milliamperes (max.) power supply.

Electrical Hazard: Gen4 Ionizing Bars are shockless (less than 40 microamperes short circuited).

Do not use near flammable materials or gases.

Materials of Construction

Metal Parts: Aluminum
Plastic Parts: UL rated 94 HB
Emitters: Stainless Steel

Maximum Ambient Temperature: 165°F (74°C)

Shims: Thicker shims can be installed easily if additional hard-hitting velocity is required, see "shim sets" page 34.

GEN4 Standard Ion Air Knife Models

Gen4 Standard Ion Air Knife - consists of the Standard Air Knife and Gen4 Ionizing Bar assembly. Does not include Power Supply.

Gen4 Standard Ion Air Knife Systems - include a Gen4 Standard Ion Air Knife and Model 7960 Gen4 Power Supply (115V, 230V, 50/60Hz).

Gen4 Standard Ion Air Knife Kits - include a Gen4 Standard Ion Air Knife, Model 7960 Gen4 Power Supply, shim set, filter separator and pressure regulator (with coupler).

Gen4 Deluxe Standard Ion Air Knife Kits - include a Gen4 Standard Ion Air Knife, EFC, Universal Mounting System, Model 7960 Gen4 Power Supply, shim set, filter separator and pressure regulator (with coupler).

Length	Gen4 Standard Ion Air Knife Model	Gen4 Standard Ion Air Knife Systems Model	Gen4 Standard Ion Air Knife Kits Model	Gen4 Deluxe Standard Ion Air Knife Kits Model
3" (76mm)	8103	8203	8403	8403DX
6" (152mm)	8106	8206	8406	8406DX
9" (229mm)	8109	8209	8409	8409DX
12" (305mm)	8112	8212	8412	8412DX
18" (457mm)	8118	8218	8418	8418DX
24" (610mm)	8124	8224	8424	8424DX
30" (762mm)	8130	8230	8430	8430DX
36" (914mm)	8136	8236	8436	8436DX
42" (1067mm)	8142	8242	8442	8442DX
48" (1219mm)	8148	8248	8448	8448DX

Special length Gen4 Standard Ion Air Knives and unlimited system lengths are available. Please contact our factory.

Universal Air Knife Mounting System



EXAIR's Universal Air Knife Mounting System allows easy positioning of all EXAIR Air Knives. See page 29 for details.

GO GREEN SAVE MONEY

Order EXAIR's EFC™ electronic flow control to minimize compressed air use. See page 7 for details.

EXAIR_Cat36_25_FROMINDESIGN.indb 139 12/20/24 3:47 PM

GEN4® Ionizing Bars

Low cost GEN4® Ionizing Bars eliminate static cling!

Compact, rugged design for industrial applications!



What Is The GEN4 Ionizing Bar?



EXAIR's Gen4 Ionizing Bar is engineered to perform up to 25% better than previous models for applications where the bar is mounted within 2" of the surface it is treating. It has also been designed to perform well 100% farther away by providing static elimination up to 4" from a charged surface. Gen4 Ionizing Bars eliminate static electricity on paper, film and plastics that can attract dust and foreign materials, ruin product appearance, produce tearing or jamming, and zap personnel. The electrically powered Gen4 Ionizing Bar is compact, allowing it to fit in the confined spaces of machinery where the charge is generated. A high concentration of positive and negative ions produce fast static decay, neutralizing any surface within 4" (102mm) of the bar.

Why The GEN4 Ionizing Bar?

The unique design of the shockless Gen4 Ionizing Bar offers improved performance and reliability in industrial applications. Life expectancy has been extended by insertion molding the stainless steel ion emitters into a durable engineered polymer. There are no openings or grooves to accumulate dirt that could cause shorting or arcing. A 5kV power source provides high performance, eliminating frequent burnouts commonly associated with traditional 7kV bars.

The Gen4 Ionizing Bar includes a five foot shielded cable with ground. A mounting flange is provided for easy installation and all components are fully assembled. Standard lengths up to 108" (2743mm) are available from stock and special lengths up to 118" (3m) are available by special order. EXAIR Model 7960 or 7961 Gen4 Power Supply (5kV) is required for bar operation.

The ability to eliminate static can be greatly improved when attaching the Super Air Knife to the Gen4 Ionizing Bar. The Gen4 Super Ion Air Knife propels the static neutralizing ions over a larger area which is ideal for high speed, high charge applications. Air delivery can also remove dust and clean the product surface.

Applications

- Labeling
- Bag making - form and fill
- Neutralizing shrink wrap
- Sheet fed and web presses
- Packaging
- Converting machinery
- Neutralizing slitting operations
- Textiles
- Screen printing

Advantages

- Significantly improved performance when positioned 2" or closer to a surface
- Effective up to 4" (102mm)
- Rugged metal armored and electromagnetically shielded cable
- Integrated ground eliminates additional ground connection
- Durable stainless steel connections to Power Supply
- Low cost
- Rapid static decay
- Compact
- Shockless, non-radioactive
- Rugged design for industrial environments
- Easy to install, equipped with mounting flange
- Low maintenance
- Fully assembled

EXAIR_Cat36_25_FROMINDESIGN.indb 140 12/20/24 3:47 PM

How The Gen4 Ionizing Bar Works

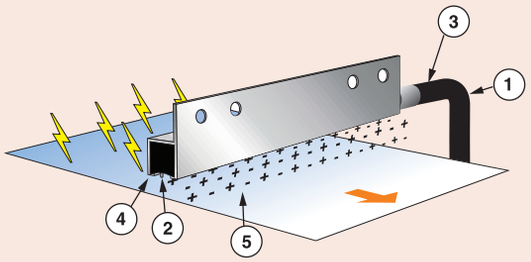

The electromagnetically shielded power cable (1) carries the 5kVrms power supply output to each inductively coupled stainless steel emitter point (2) of the Gen4 Ionizing Bar. An integrated ground wire (3) within the power cable creates a discharge path from the emitter points to the bar channel (4). The discharge at each emitter charges the molecules of the gases of the surrounding room air, resulting in a shower of ions that are positively and negatively charged (5). If the material surface has a negative charge, it will attract the positive ions from the Gen4 Ionizing Bar and become balanced or neutralized. If the material surface has a positive charge, it will attract the negative ions from the Gen4 Ionizing Bar to become balanced or neutralized.

The voltage potential at each emitter is high enough to ionize the surrounding air without generating a shock when any of the emitters are touched.

Gen4 Ionizing Bar Specifications

Model 7960 or 7961 Gen4 Power Supply (5kV) is required for Gen4 Ionizing Bar operation. See page 151 for details.

Certifications: Gen4 Ionizing Bars and Gen4 Power Supplies are UL Component Recognized to U.S. and Canadian safety standards, and are CE and RoHS compliant.

Electrical: For use with 5 kVrms, 5 milliamperes (max.) power supply.

Electrical Hazard: Gen4 Ionizing Bars are shockless (less than 40 microamperes short circuited).

Do not use near flammable materials or gases.

Materials of Construction

Metal Parts: Aluminum

Plastic Parts: UL rated 94 HB

Emitters: Stainless Steel

Maximum Ambient Temperature: 165°F (74°C)

Gen4 Ionizing Bar Performance

	Distance From Charged Surface				
	0.50" (13mm)	1" (25mm)	2" (51mm)	3" (76mm)	4" (102mm)
Dissipates 5kV* (seconds)	0.1	0.14	0.29	0.53	0.96

* Multiple different length Ionizing Bars tested (3"-48").

Gen4 Ionizing Bar Dimensions

DOWNLOAD drawings at EXAIR.com

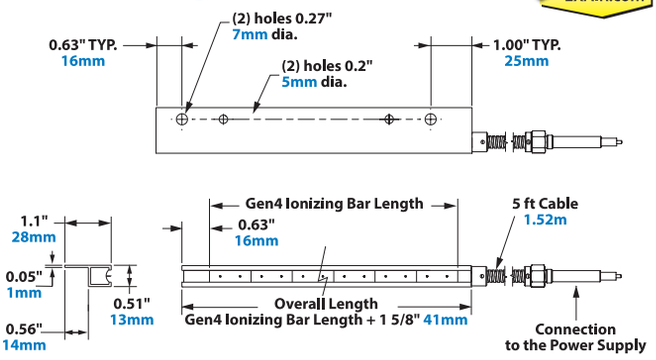

Gen4 Ionizing Bars

Gen4 Ionizing Bars - include a 5' (1.52m) length of armored and electromagnetically shielded cable and assembled connector. For other cable lengths, please contact the factory.

Length	Gen4 Ionizing Bar Models
3" (76mm)	8003
6" (152mm)	8006
9" (229mm)	8009
12" (305mm)	8012
18" (457mm)	8018
24" (610mm)	8024
30" (762mm)	8030
36" (914mm)	8036
42" (1067mm)	8042
48" (1219mm)	8048
54" (1372mm)	8054
60" (1524mm)	8060
72" (1829mm)	8072
84" (2134mm)	8084
96" (2438mm)	8096
108" (2743mm)	80108

Accessories and Components

Model #	Description
7960	2 Outlet Selectable Voltage Gen4 Power Supply (115V, 230V, 50/60Hz)
7961	4 Outlet Selectable Voltage Gen4 Power Supply (115V, 230V, 50/60Hz)
7905	Static Meter



Model 8006 6" (152mm) Gen4 Ionizing Bar and Model 7960 Gen4 Power Supply.

Special length Gen4 Ionizing Bars up to 118" (3m) are available. Please contact our factory.

EXAIR_Cat36_25_FROMINDESIGN.indb 141 12/20/24 3:47 PM

Gen4® Super Ion Air Wipe™

Ring of ionized airflow clamps around the part!

Neutralizes and cleans continuous moving surfaces!

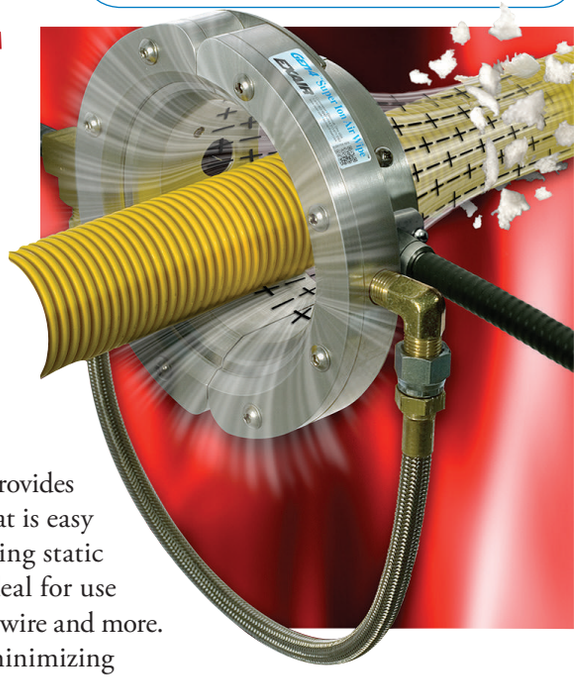

What Is The Gen4 Super Ion Air Wipe?



EXAIR's Gen4 Super Ion Air Wipe provides a uniform 360˚ ionized airstream that is easy to clamp around a part for eliminating static electricity and contaminants. It is ideal for use on pipe, cable, extruded shapes, hose, wire and more. It maximizes ionized airflow while minimizing compressed air consumption.

Why The Gen4 Super Ion Air Wipe?

The Gen4 Super Ion Air Wipe provides total coverage of the part moving through it. The high volume, high velocity flow attaches itself to the surface and wipes it down with the static eliminating ions. The airflow stays attached to the surface and is effective up to 15' (4.6m) away from where the Gen4 Super Ion Air Wipe is mounted. An optional pressure regulator provides infinite control of the air volume and velocity. Increasing the pressure increases the forceful wiping action. Lower pressures provide excellent coverage with much lower force and velocity.

The Gen4 Super Ion Air Wipe is the easy way to provide uniform coverage around a continuously moving material. The hinged design, allowing the Air Wipe to open, makes threading continuous wire, tube or extrusions unnecessary. Arranging a series of other ionizers around the surface would provide uneven airflow and prove to be costly. The split design of the Gen4 Super Ion Air Wipe solves that problem by making it easy to clamp around the surface of the material moving through it, eliminating the need for threading or several ionizers.

The Gen4 Super Ion Air Wipe is lightweight and easy to mount using the tapped holes on the back. It can also be held in place with rigid pipe. Coupling brackets that hold each half of the Gen4 Super Ion Air Wipe together are provided which can be installed or removed quickly if required.

Applications

- Clean and neutralize extrusions
- Neutralizing pipe, tubing, wire
- Cleaning molded parts
- Neutralizing static for quality printing
- Pre-paint dust removal
- Remove chips, shavings and sawdust
- Container neutralization

Advantages

- Low air consumption
- Rapid static decay
- Quiet
- Shockless, non-radioactive
- Compact, rugged, easy to install
- No moving parts - low maintenance
- Variable force and flow
- Electromagnetically shielded high voltage cable
- Armored high voltage cable protects against abrasion, cuts
- Integrated ground design requires no separate ground connection
- Replaceable emitter points



The split design unlatches easily to fit around the moving part - no threading required.

EXAIR_Cat36_25_FROMINDESIGN.indb 142 12/20/24 3:47 PM

How The GEN4 Super Ion Air Wipe Works

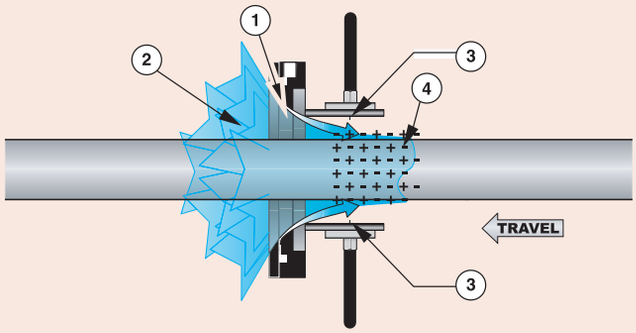

The Gen4 Super Ion Air Wipe incorporates a Super Air Wipe and a split ionizing collar, energized by a power supply. Compressed air is ejected through the small ring nozzle of the Super Air Wipe at high velocity (1). A conical 360° ring of air is created that induces high volumes of surrounding air (2). The airflow passes through the collar and is ionized by two replaceable emitter points (3). That high velocity, ionized airstream attaches itself to the surface of the material running through the Gen4 Super Ion Air Wipe (4), uniformly eliminating the static electricity and removing any contaminants from the surface.

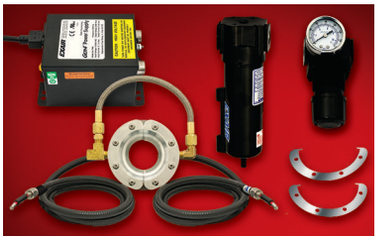

Model 8462 Gen4 Super Ion Air Wipe Kit includes the Gen4 Super Ion Air Wipe, shim set, Model 7960 Gen4 Power Supply, filter separator and pressure regulator (with coupler).

GEN4 Super Ion Air Wipe Specifications

EXAIR Model 7960 or 7961 Gen4 Power Supply (5kV) is required for Super Ion Air Wipe operation.
See page 151 for details.

Certifications: The Gen4 Super Ion Air Wipe and Gen4 Power Supply are UL Component Recognized to U.S. and Canadian safety standards, and are CE and RoHS compliant.

Electrical: For use with 5 kVrms, 5 milliamperes (max.) power supply.

Electrical Hazard: Shockless (less than 40 microamperes short circuited).

Do not use near flammable materials or gases.

Materials of Construction

Metal Parts: Aluminum **Emitter:** Stainless Steel

Plastic Parts: UL rated 94 HB

Maximum Ambient Temperature: 165°F (74°C)

Shims: Thicker shims can be installed easily if additional hard-hitting velocity is required. See "shim sets" page 41.

Compressed Air: 1/4 NPT inlet provided.

GEN4 Super Ion Air Wipe Performance

80 PSIG (5.5 BAR)	Air Consumption		Sound Level	Dissipates 5kV*
Model	SCFM	SLPM	dBA	SECONDS
8162	29.5	835	77	0.20
8164	50.2	1,422	81	0.20

* 12" (305mm) from target.

GEN4 Super Ion Air Wipe	
Model #	Description
8162	2" (51mm) Gen4 Super Ion Air Wipe
8164	4" (102mm) Gen4 Super Ion Air Wipe
8262	2" (51mm) Gen4 Super Ion Air Wipe and Gen4 Power Supply
8264	4" (102mm) Gen4 Super Ion Air Wipe and Gen4 Power Supply

GEN4 Super Ion Air Wipe Kits	
Kits include a Gen4 Super Ion Air Wipe, shim set, Model 7960 Gen4 Power Supply, filter separator and pressure regulator (with coupler).	
Model #	Description
8462	2" (51mm) Gen4 Super Ion Air Wipe Kit
8464	4" (102mm) Gen4 Super Ion Air Wipe Kit

Accessories and Components	
Model #	Description
7960	2 Outlet Selectable Voltage Gen4 Power Supply (115V, 230V, 50/60Hz)
7961	4 Outlet Selectable Voltage Gen4 Power Supply (115V, 230V, 50/60Hz)
9001	Auto Drain Filter Separator, 3/8 NPT, 65 SCFM (1,841 SLPM)
9008	Pressure Regulator with Gauge, 1/4 NPT, 50 SCFM (1,415 SLPM)
7905	Static Meter

GEN4 Super Ion Air Wipe Dimensions

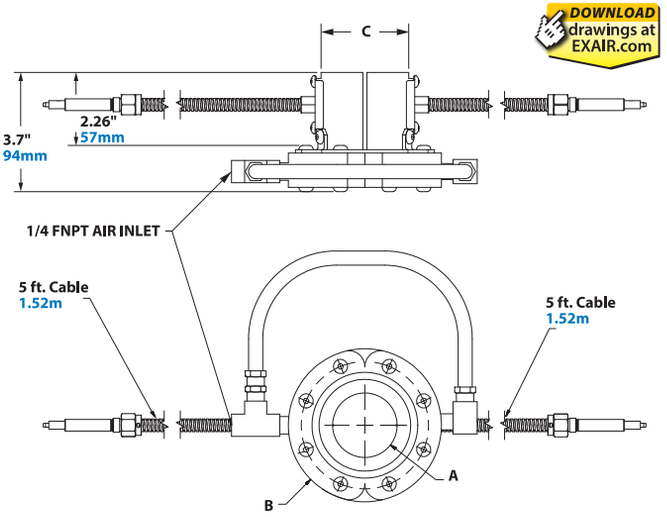

Model	A	B	C
8162	2" (51mm)	4.75" (121mm)	2.7" (69mm)
8164	4" (102mm)	6.75" (171mm)	4.72" (120mm)

EXAIR_Cat36_25_FROMINDESIGN.indb 143 12/20/24 3:47 PM

GEN4® Ion Air Cannon™

Quiet, efficient, concentrated flow of ionized air removes static and dust!



What Is The GEN4 Ion Air Cannon?



EXAIR's Gen4 Ion Air Cannon neutralizes static electricity and cleans at distances up to 15 feet (4.6m) with no moving parts. It is ideal for those hard to reach spaces or confined areas that require a concentrated flow of static eliminating ions. With an optional pressure regulator, the air volume and velocity are infinitely adjustable over a wide range, for light to heavy duty applications.

Why The GEN4 Ion Air Cannon?

The Gen4 Ion Air Cannon will **maximize ionized airflow while minimizing compressed air consumption.** A small amount of compressed air is used to entrain a high volume flow of surrounding air. This combined stream is ionized by an emitter point (shockless) and delivered to the charged surface. A hose or tube can be connected to the air intake of the Gen4 Ion Air Cannon to draw quality air from another area. It requires only 10 PSIG (0.7 BAR) for most applications.

The compact design saves bench space and allows mounting in confined areas. The sturdy stand is pre-drilled and can be wall, bench or machine mounted. It incorporates a swivel adjustment for directing the airflow.

EXAIR's EFC (*shown on page 7*) is an electronic flow control for compressed air. For production lines, it can sense when no part is present and will automatically turn off the compressed air to the Gen4 Ion Air Cannon until the next part moves into position.

Applications

- Bag opening - form and fill
- Clean and neutralize parts
- Neutralizing shrink wrap
- Cleaning molded parts
- Removing static on assemblies
- Pre-paint dust removal
- Neutralizing slitting operations
- Package cleaning
- Container neutralization

Advantages

- Electromagnetically shielded high voltage cable
- Armored high voltage cable protects against abrasion, cuts
- Integrated ground design requires no separate ground connection
- Replaceable emitter point
- Low air consumption
- Rapid static decay
- Quiet
- Shockless, non-radioactive
- Compact, rugged, easy to install
- Intake can be ducted
- No moving parts - low maintenance
- Variable force and flow

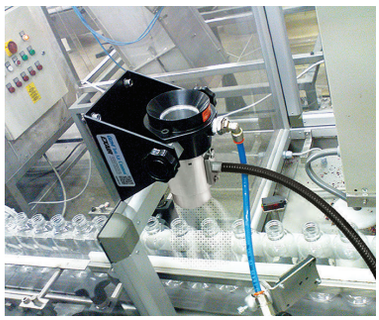

The Model 8292 Gen4 Ion Air Cannon System eliminates the static and dust prior to filling the bottles.



(3) Gen4 Ion Air Cannons blow contaminants from car bodies prior to painting.

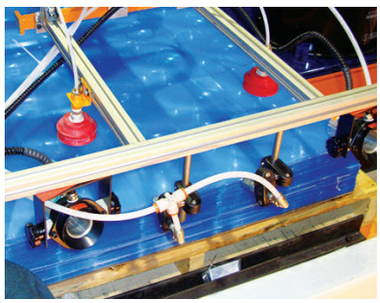

Model 8192 Gen4 Ion Air Cannons provide static elimination in between solar panel lenses to assist separation of the lenses during production.

EXAIR_Cat36_25_FROMINDESIGN.indb 144 12/20/24 3:47 PM

How The GEN4 Ion Air Cannon Works

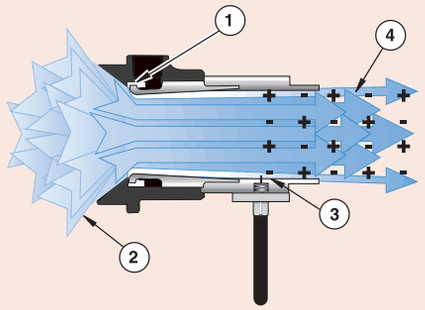

The Gen4 Ion Air Cannon incorporates a Super Air Amplifier* and ionizing collar, energized by a power supply. A small amount of compressed air is injected into the barrel of the cannon (1) inducing a high flow of surrounding air to flow through it (2). A replaceable emitter point at the discharge end of the cannon (3) ionizes the entire airstream. The result is a high volume, conical flow of ionized air (4) capable of eliminating static and cleaning at distances up to 15 feet (4.6m). Because more than 90% of the ionized air is induced, the Gen4 Ion Air Cannon produces maximum airflow at minimum air consumption.

*Patent #5402938

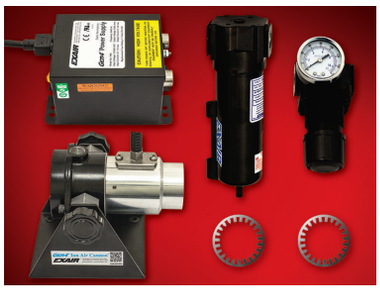

Model 8492 Gen4 Ion Air Cannon Kit includes the Gen4 Ion Air Cannon, shim set, Model 7960 Gen4 Power Supply, filter separator and pressure regulator (with coupler).

GEN4 Ion Air Cannon Specifications

EXAIR Model 7960 or 7961 Gen4 Power Supply (5kV) is required for Gen4 Ion Air Cannon operation.
See page 151 for details.

Certifications: The Gen4 Ion Air Cannon and Gen4 Power Supply are UL Component Recognized to U.S. and Canadian safety standards, and are CE and RoHS compliant.

Electrical: For use with 5 kVrms, 5 milliamperes (max.) power supply.

Electrical Hazard: Shockless (less than 40 microamperes short circuited).

Do not use near flammable materials or gases.

Materials of Construction:

Metal Parts: Aluminum

Plastic Parts: UL rated 94 HB

Emitter: Stainless Steel

Maximum Ambient Temperature: 165°F (74°C)

Shims: Thicker shims can be installed easily if more hard-hitting velocity is required. See page 49.

Compressed Air: 3/8 NPT inlet provided.

GEN4 Ion Air Cannon Performance

Pressure Supply		Air Consumption		Sound Level	Dissipates 5kV*
PSIG	BAR	SCFM	SLPM	dBA	SECONDS
20	1.4	5.7	161	58	0.75
40	2.8	9	255	64	0.6
60	4.1	12.2	345	70	0.5
80	5.5	15.5	439	72	0.43
100	6.9	18.7	529	74	0.37

* 12" (305mm) from target. For airflow pattern, see Super Air Amplifier on page 49.

GEN4 Ion Air Cannon	
Model #	Description
8192	Gen4 Ion Air Cannon includes Super Air Amplifier, Emitter, Stand, and 5' (1.52m) length of armored and electromagnetically shielded cable
8292	Gen4 Ion Air Cannon and Gen4 Power Supply
8492	Gen4 Ion Air Cannon Kit (see image above)

GEN4 Deluxe Ion Air Cannon Kits	
Model #	Description
8492DX	Kits include a Gen4 Ion Air Cannon, EFC, shim set, Model 7960 Gen4 Power Supply, filter separator and pressure regulator (with coupler).

Accessories and Components	
Model #	Description
7960	2 Outlet Selectable Voltage Gen4 Power Supply (115V, 230V, 50/60Hz)
7961	4 Outlet Selectable Voltage Gen4 Power Supply (115V, 230V, 50/60Hz)
9001	Auto Drain Filter Separator, 3/8 NPT, 65 SCFM (1,841 SLPM)
9008	Pressure Regulator with Gauge, 1/4 NPT, 50 SCFM (1,415 SLPM)
7905	Static Meter

GEN4 Ion Air Cannon Dimensions

DOWNLOAD drawings at EXAIR.com

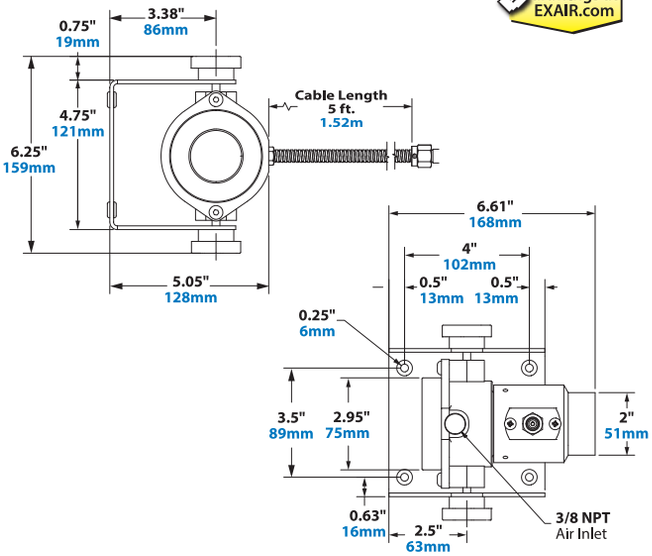

EXAIR_Cat36_25_FROMINDESIGN.indb 145 12/20/24 3:47 PM

GEN4 Ion Air Gun™

Rugged, ergonomic static eliminating gun that is a lightweight, effective spot cleaner!



What Is The GEN4 Ion Air Gun?



EXAIR's Gen4 Ion Air Gun combines incredibly fast static decay rates with low compressed air consumption. It is the ideal way to remove static, contaminants and dust from three dimensional parts prior to assembly, packaging, painting or finishing. The Gen4 Ion Air Gun neutralizes static electricity and cleans at distances up to 15 feet (4.6m).

Why The GEN4 Ion Air Gun?

The Gen4 Ion Air Gun induces surrounding airflow through the gun at a ratio of 5:1, minimizing compressed air usage and maximizing ionized airflow. The force can be adjusted from a "blast" to a "breeze". A comfortable grip and hand position allows hours of continuous use without fatigue.

The Gen4 Ion Air Gun is quiet, lightweight and features a hanger hook for easy storage. The 10 foot (3m) armored and electromagnetic shielded power cable is extremely flexible, designed for rugged industrial use.

Applications

- Pre-paint dust removal
- Clean and neutralize three dimensional parts
- Removing dust from optics
- Cleaning molded parts
- Photo finishing
- Lens cleaning
- Furniture finishing
- Package cleaning
- Container neutralization

Advantages

- Electromagnetically shielded high voltage cable
- Armored high voltage cable protects against abrasion, cuts
- Integrated ground design requires no separate ground connection
- Replaceable emitter point
- Rugged, lightweight, easy to use
- Rapid static decay
- Low air consumption
- Quiet
- Shockless, non-radioactive
- Strong blowoff force and flow
- Low maintenance
- Meets OSHA pressure and noise level requirements



The Model 8293 Gen4 Ion Air Gun cleaning artwork and glass prior to framing.



The Model 8293 Gen4 Ion Air Gun neutralizes and cleans plastic bottles prior to labeling.

EXAIR_Cat36_25_FROMINDESIGN.indb 146 12/20/24 3:47 PM

How The GEN4 Ion Air Gun Works

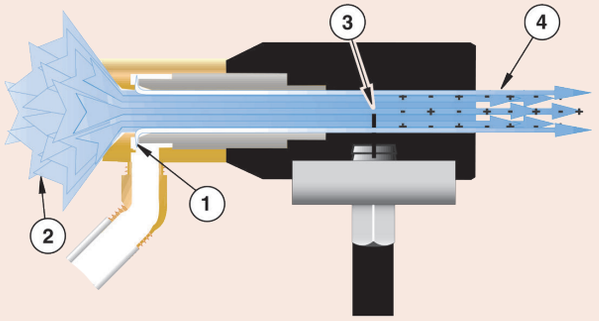

The Gen4 Ion Air Gun incorporates a High Velocity Air Jet and electrically energized emitter point. A small amount of compressed air is injected into the air jet (1) inducing a high volume flow of surrounding air (2) to pass through it.

The emitter point (shockless) at the discharge end of the gun (3) ionizes the entire airstream. The result is a high volume flow of ionized air (4) capable of neutralizing high static charges in fractions of a second. An optional filter and regulator clean the compressed air and allow infinite adjustment of airflow and velocity.

GEN4 Ion Air Gun Specifications

EXAIR Model 7960 or 7961 Gen4 Power Supply (5kV) is required for Gen4 Ion Air Gun operation. See page 151 for details.

Certifications: The Gen4 Ion Air Gun and Gen4 Power Supply are UL Component Recognized to U.S. and Canadian safety standards, and are CE and RoHS compliant.

Electrical: For use with 5 kVrms, 5 milliamperes (max.) power supply.

Electrical Hazard: Shockless (less than 40 microamperes short circuited).

Do not use near flammable materials or gases.

Materials of Construction:

Metal Parts: Brass, Zinc and Stainless Steel

Plastic Parts: UL rated 94 HB

Emitter: Stainless Steel

Maximum Ambient Temperature: 165°F (74°C)

Compressed Air: 1/4 NPT inlet provided.

GEN4 Ion Air Gun Performance

Pressure Supply		Air Consumption		Sound Level	Dissipates 5kV*
PSIG	BAR	SCFM	SLPM	dBA	SECONDS
20	1.4	7.4	209	67	0.45
40	2.8	11.5	325	74	0.33
60	4.1	15.8	447	79	0.24
80	5.5	22.0	622	82	0.18
100	6.9	24.0	679	85	0.18

*6" (152mm) from target. For airflow pattern, see Model 6013 High Velocity Air Jet on page 61.

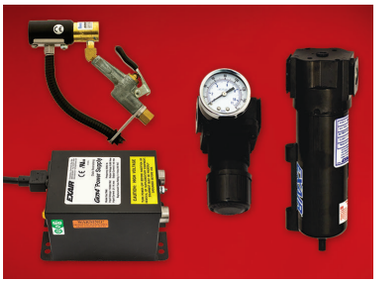

Model 8493 Gen4 Ion Air Gun Kit includes the Gen4 Ion Air Gun, Model 7960 Gen4 Power Supply, filter separator and pressure regulator (with coupler).

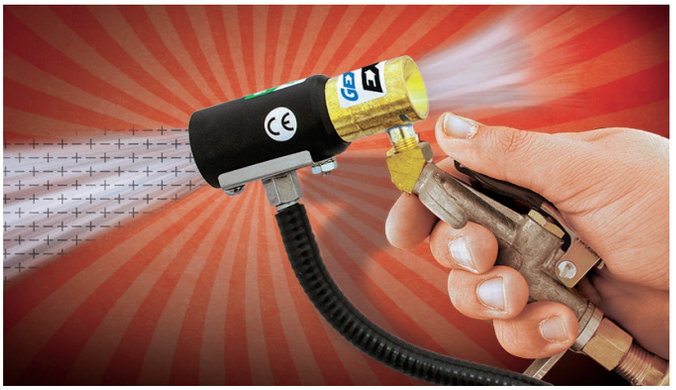

80% of the delivered air is induced, minimizing air consumption of the Gen4 Ion Air Gun.

GEN4 Ion Air Gun	
Model #	Description
8193	Gen4 Ion Air Gun Only includes 10' (3m) shielded cable*
8293	Gen4 Ion Air Gun and Gen4 Power Supply
8493	Gen4 Ion Air Gun Kit includes the Gen4 Ion Air Gun, Model 7960 Gen4 Power Supply, filter separator and pressure regulator (with coupler).

* For special length cables, please contact the factory.

Accessories and Components	
Model #	Description
7960	2 Outlet Selectable Voltage Gen4 Power Supply (115V, 230V, 50/60Hz)
7961	4 Outlet Selectable Voltage Gen4 Power Supply (115V, 230V, 50/60Hz)
9001	Auto Drain Filter Separator, 3/8 NPT, 65 SCFM (1,841 SLPM)
9008	Pressure Regulator with Gauge, 1/4 NPT, 50 SCFM (1,415 SLPM)
7905	Static Meter

Order Direct We Ship From Stock

EXAIR_Cat36_25_FROMINDESIGN.indb 147 12/20/24 3:47 PM

GEN4® Ion Air Jet™

Air saving Gen4 Ion Air Jet is an effective spot cleaner!

Choose permanent mount or flexible hose with base!



The Model 8294 Gen4 Ion Air Jet with Gen4 Power Supply neutralizes static and removes dust from a counting sensor window on a tablet production machine.

What Is The GEN4 Ion Air Jet?



EXAIR's Gen4 Ion Air Jet delivers a concentrated airflow that can cover a precise spot without disturbing other areas. This quiet, focused airstream provides incredibly fast static decay rates and cleaning ability. The Gen4 Ion Air Jet is the ideal way to remove static and dust from small parts prior to shrink wrapping, packaging, printing, painting or finishing.

Why The GEN4 Ion Air Jet?

The Gen4 Ion Air Jet induces surrounding airflow at a ratio of 5:1, minimizing compressed air use and maximizing ionized airflow. Force can be adjusted from a "blast" to a "breeze".

Your Choice Of Permanent Mount or Flexible Stay Set Hose™

For permanent mount applications, the compact Gen4 Ion Air Jet is the best choice since it is lightweight and easy to install using the 1/8 NPT male inlet. For applications where frequent repositioning is required, the flexible Gen4 Stay Set Ion Air Jet™ is ideal. This version can be placed in close proximity and the hose bent to aim the ionized airstream at the localized area. Since the hose has "memory" it will not creep or bend, always keeping the aim until physically moved to the next position.

The Gen4 Stay Set Ion Air Jet comes complete with a magnetic base that allows easy mounting and portability on a machine, a bench or other surface. A shutoff valve on the base provides infinite control of the force and flow.

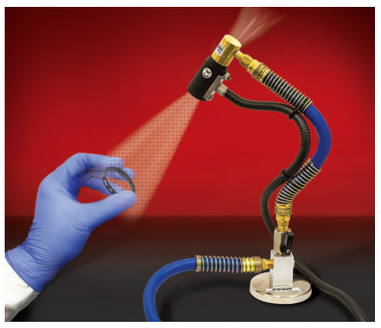

The Model 8194-9362 Gen4 Stay Set Ion Air Jet Kit cleans dust from a glass lens prior to installation on a gauge.



A Model 8294 Gen4 Ion Air Jet with Gen4 Power Supply neutralizes static and removes dust for an anti-tampering labelling process.

Applications

- Three dimensional parts
- Bottle cleaning
- Screen printing
- Shrink bands
- Ink jet printing
- Part cleaning
- Package cleaning

Advantages

- Low cost
- Rapid static decay
- Quiet
- Shockless, non-radioactive
- Electromagnetically shielded high voltage cable
- Armored high voltage cable protects against abrasion, cuts
- Integrated ground design requires no separate ground connection
- Replaceable emitter point
- Compact, rugged, easy to install
- Stay Set Hose for accurate placing
- Low air consumption

EXAIR_Cat36_25_FROMINDESIGN.indb 148 12/20/24 3:47 PM

How The GEN4 Ion Air Jet Works

The Gen4 Ion Air Jet functions the same as the Gen4 Ion Air Gun without the blowgun handle. For details on how it works, see page 147 "*How The Gen4 Ion Air Gun Works*".

GEN4 Ion Air Jet Performance

Pressure Supply		Air Consumption		Sound Level	Dissipates 5kV*
PSIG	BAR	SCFM	SLPM	dBA	SECONDS
20	1.4	7.4	209	67	0.45
40	2.8	11.5	325	74	0.33
60	4.1	15.8	447	79	0.24
80	5.5	22.0	622	82	0.18
100	6.9	24.0	679	85	0.18

*6" (152mm) from target. For airflow pattern, see Model 6013 High Velocity Air Jet on page 61.

GEN4 Ion Air Jet Dimensions

DOWNLOAD drawings at EXAIR.com

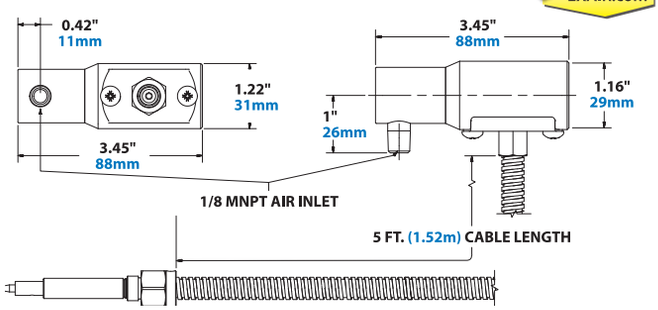

GEN4 Ion Air Jet Specifications

Model 7960 or 7961 Gen4 Power Supply (5kV) is required for Gen4 Ion Air Jet operation. See page 151 for details.

Certifications: The Gen4 Ion Air Jet and Gen4 Power Supply are UL Component Recognized to U.S. and Canadian safety standards, and are CE and RoHS compliant.

Electrical: For use with 5 kVrms, 5 milliamperes (max.) power supply.

Electrical Hazard: Shockless (less than 40 microamperes short circuited).

Do not use near flammable materials or gases.

Materials of Construction

Metal Parts: Brass and Stainless Steel

Plastic Parts: UL rated 94 HB

Emitter: Stainless Steel

Maximum Ambient Temperature: 165°F (74°C)

Compressed Air: 1/8 NPT inlet provided on Gen4 Ion Air Jet. 1/4 NPT inlet provided on Gen4 Stay Set Ion Air Jet.

GEN4 Ion Air Jet	
Model #	Description
8194	Gen4 Ion Air Jet Only includes 5' (1.52m) armored and electromagnetically shielded cable*
8294	Gen4 Ion Air Jet and Gen4 Power Supply
8494	Gen4 Ion Air Jet Kit includes Gen4 Power Supply, filter separator and pressure regulator (with coupler).

GEN4 Stay Set Ion Air Jet	
Model #	Description
8194-9362	Gen4 Stay Set Ion Air Jet includes 5' (1.52m) armored and electromagnetically shielded cable*, one outlet magnetic base with shutoff valve and 12" (305mm) Stay Set Hose.
8294-9362	Gen4 Stay Set Ion Air Jet and Model 7960 Gen4 Power Supply (115V, 230V, 50/60Hz)
8494-9362	Gen4 Stay Set Ion Air Jet Kit (see detail at right)

*For special length cables, please contact the factory.

Accessories and Components	
Model #	Description
7960	2 Outlet Selectable Voltage Gen4 Power Supply (115V, 230V, 50/60Hz)
7961	4 Outlet Selectable Voltage Gen4 Power Supply (115V, 230V, 50/60Hz)
9001	Auto Drain Filter Separator, 3/8 NPT, 65 SCFM (1,841 SLPM)
9008	Pressure Regulator with Gauge, 1/4 NPT, 50 SCFM (1,415 SLPM)
7905	Static Meter



Model 8494 Gen4 Ion Air Jet Kit includes the Gen4 Ion Air Jet, Model 7960 Gen4 Power Supply, filter separator and pressure regulator (with coupler).



Model 8494-9362 Gen4 Stay Set Ion Air Jet Kit includes the Gen4 Stay Set Ion Air Jet, Model 7960 Gen4 Power Supply, filter separator and pressure regulator (with coupler).

EXAIR_Cat36_25_FROMINDESIGN.indb 149 12/20/24 3:47 PM

GEN4® Ionizing Point™

Single point ionizer for spot neutralization!



Gen4 Ionizing Points remove static from a card slitting operation.

What Is The GEN4 Ionizing Point?

EXAIR's Gen4 Ionizing Point is a compact, single point ionizer ideal for winding, rewinding or slitting operations. It can also be mounted through a duct to neutralize static charges due to moving air or materials.

The shockless Gen4 Ionizing Point delivers a high concentration of positive and negative ions for fast static decay. It can neutralize any surface within 2" (51mm).

GEN4 Ionizing Point Dimensions

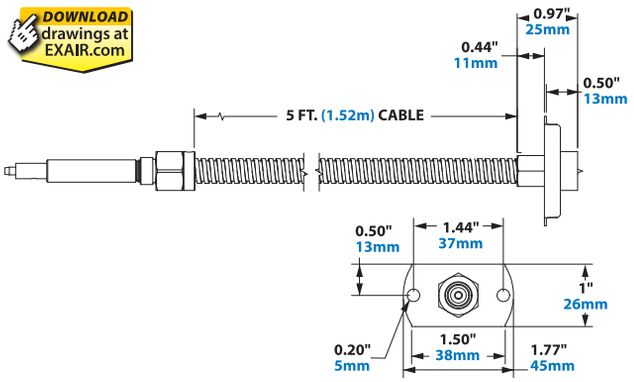

GEN4 Ionizing Point Performance

	Distance From Charged Surface		
	0.50" (13mm)	1" (25mm)	2" (51mm)
Dissipates 5kV (seconds)	0.12	0.18	0.24

Applications

- Winding
- Rewinding
- Slitting
- Neutralizing ducted air
- Labeling
- Form and Fill
- Neutralizing static for print quality.

Advantages

- Electromagnetically shielded high voltage cable
- Armored high voltage cable protects against abrasion, cuts
- Integrated ground design requires no separate ground connection
- Low cost
- Replaceable emitter point
- Rapid static decay
- Shockless
- Non-radioactive
- Compact

GEN4 Ionizing Point Specifications

EXAIR Model 7960 or 7961 Gen4 Power Supply (5kV) is required for Gen4 Ionizing Point operation.
See page 151 for details.

Certifications: The Gen4 Ionizing Point and Gen4 Power Supply are UL Component Recognized to U.S. and Canadian safety standards, and are CE and RoHS compliant.

Electrical: For use with 5 kVrms, 5 milliamperes (max.) power supply.

Electrical Hazard: Shockless (less than 40 microamperes short circuited).

Do not use near flammable materials or gases.

Materials of Construction

Metal Parts: Stainless Steel

Plastic Parts: UL rated 94 HB

Emitter: Stainless Steel

Maximum Ambient Temperature: 165°F (74°C)



The Model 8299 Gen4 Ionizing Point System includes the Gen4 Ionizing Point and Model 7960 Gen4 Power Supply.

GEN4 Ionizing Point	
Model #	Description
8199	Gen4 Ionizing Point Only includes 5' (1.52m) shielded cable*
8299	Gen4 Ionizing Point System (see detail above)

* For special length cables, please contact the factory.

Accessories and Components	
Model #	Description
7960	2 Outlet Selectable Voltage Gen4 Power Supply (115V, 230V, 50/60Hz)
7961	4 Outlet Selectable Voltage Gen4 Power Supply (115V, 230V, 50/60Hz)
7905	Static Meter

EXAIR_Cat36_25_FROMINDESIGN.indb 150 12/20/24 3:47 PM

GEN4® Power Supplies

Selectable Voltage:
For use with all Gen4 Static Eliminators!

IDEA! AWARDS BRONZE



The Model 7960 Gen4 Power Supply has 115VAC or 230VAC selectable voltage, lighted power switch, integral fuse on the primary, electromagnetically shielded modular power cable and (2) 5kV outlets.



The Model 7961 Gen4 Power Supply has 115VAC or 230VAC selectable voltage, lighted power switch, integral fuse on the primary, electromagnetically shielded modular power cable and (4) 5kV outlets.

Why Use GEN4 Power Supplies?

The two and four outlet Gen4 Power supplies have selectable voltage which allows you to choose input voltages of 115VAC or 230VAC. The modular cable with electromagnetic shielding protects sensitive electronics against electromagnetic interference while easing connections and routing. An integrated fuse on the primary protects against voltage spikes.

GEN4 Power Supplies

The Two and Four Outlet selectable voltage Gen4 Power Supplies require an input of 115VAC, 50/60 Hz or 230VAC, 50/60 Hz. A 6' (1.83m) modular power cord and lighted power switch are included. Power Supplies are UL Component Recognized to U.S. and Canadian safety standards, and are CE and RoHS compliant.

GEN4 Power Supply Dimensions

DOWNLOAD drawings at EXAIR.com

INPUT VOLTAGE: 115/230 VAC
INPUT CURRENT: .2/.1 A MAX
FREQUENCY: 50/60 HZ

OUTPUT VOLTAGE: 5000 Vrms
OUTPUT CURRENT: 5 mA MAX

Model 7960

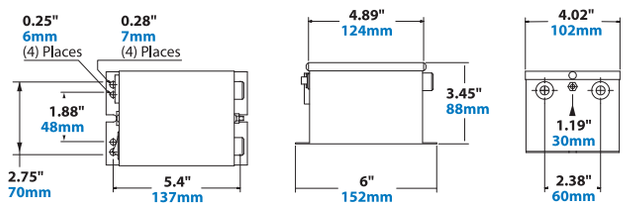

Model 7961

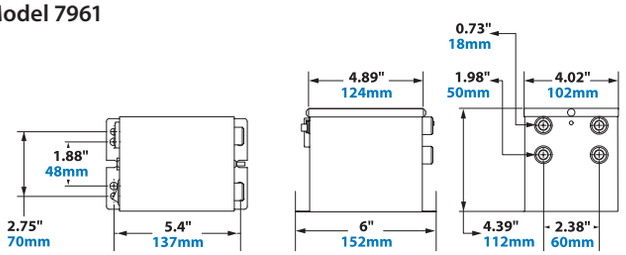

Advantages

- Replaceable rocker switch
- Durable, stainless steel high voltage connections
- Selectable voltage 115VAC or 230VAC
- Electromagnetically shielded modular power cable
- Fuse protects against voltage spikes
- Modular power supply cable eases connections and routing.

GEN4 Power Supplies: Selectable Voltage

Model #	Description
7960	2 Outlet Selectable Voltage Gen4 Power Supply (115V, 230V, 50/60Hz)
7961	4 Outlet Selectable Voltage Gen4 Power Supply (115V, 230V, 50/60Hz)

EXAIR_Cat36_25_FROMINDESIGN.indb 151 12/20/24 3:47 PM

INTELLISTAT® Ion Air Gun™

Lightweight solution for static and particulate elimination in sensitive processes!

Rated Class 5 for clean rooms and controlled environments per ISO 14644-1



What is the INTELLISTAT® Ion Air Gun?

The patented Intellistat is the newest innovation in a long line of EXAIR static elimination solutions. This intelligent product utilizes balanced and ionized compressed air to neutralize static and remove troublesome particulates during clean processes, test procedures and sensitive assembly work. With a +/-30 volt offset, the Intellistat was designed to consume minimal compressed air while simultaneously delivering precise blowoff and exceptional static decay rates capable of reducing 5000 volts to less than 500 in under one second. The design hosts an efficient, low voltage transformer converting 120V to 24V to assure safety, while also utilizing an EXAIR engineered air nozzle ensuring it meets all OSHA requirements for sound level and dead-end pressure.







Why the INTELLISTAT® Ion Air Gun?

Coming equipped with a short-throw, fast acting and effortless trigger, the Intellistat's lightweight frame (less than 200 grams) allows extended use without fatigue, while also providing a dependable and low maintenance solution. The Model 8500 Intellistat Ion Air Gun is also fitted with handy features such as a 6mm air connection, red and green LED lights to signify ionized air is being produced, and a hook for convenient hanging and storage. The 316SS emitter point is so simple to change, it can be completed in less than one minute. The housing is made of durable static dissipative polycarbonate to further minimize any potential for static electricity discharge around sensitive electronics, sensors or materials. It will produce clean, ionized compressed air essential for removing dust, static, or particulate contaminates in sterile environments such as laboratories, clean rooms, or for scientific testing.

EU Regd. Des. No. 00770318-0001
Pat. D903,817
ⒹEXAIR LLC, Mexico No. 60723, Canada No. 194141

Applications

- Precision parts assembly
- Maintain charge neutrality in laboratory processes
- Remove particles from parts and surfaces in clean environments
- Printed circuit board manufacturing
- Maintain cleanliness during electronics manufacturing and assembly
- Eliminating electrostatic discharge
- Remove debris from medical products
- Clean glass containers, slides and lenses

Advantages

- Rapid static decay
- Low voltage operation
- Quick change emitter point
- Comfortable, short throw trigger for ionization
- Light weight for prolonged use
- OSHA safe air outlet
- LED indicators for proper and improper functionality

EXAIR_Cat36_25_FROMINDESIGN.indb 152 12/20/24 3:47 PM

How The INTELLISTAT Ion Air Gun Works



Pressing the full finger, short throw trigger (1) activates the static eliminating ions and airflow. Proper or improper functionality is indicated by a green or red LED (2).

The non-marring nozzle (3) provides quiet performance and OSHA compliance. A hanger hook (4) is included to keep the Intellistat conveniently stored.

INTELLISTAT Ion Air Gun Specifications

Certifications: The Intellistat Ion Air Gun is UL listed and CE and RoHS compliant.

Power Supply Input: 100-240V — 50/60 Hz 0.7A Max

Power Supply Output: EXAIR Model 902067 Power Supply (24VDC, 1.0A Max) is required for Intellistat Ion Air Gun operation. Included with Intellistat Ion Air Gun.

Electrical Hazard: Shockless (less than 40 microamperes short circuited)

Do not use near flammable materials or gases.

Balance: ±30V

Size of Hand Unit: 6-3/8"W × 6-3/4"L × 1"H

Weight of Hand Unit: 0.42 lbs

Operating Temperature: 32°F to 105°F (0-41°C)

Do not use near flammable materials or gases.

Materials of Construction

Plastic Parts: Static Resistant Polycarbonate

Emitters: Stainless Steel

Gas Input: 30psig - 125psig Clean Dry Compressed Air or Nitrogen

Air Connection: 6mm tube

Cleanroom Classification: ISO 14644-1 Class 5, operational.

INTELLISTAT Ion Air Gun Performance

Flow		Air Consumption		Sound Level
PSIG	BAR	SCFM	SLPM	dBA
30	2.1	2.7	76.46	76
80	5.5	5.8	164.21	81

INTELLISTAT Ion Air Nozzle Force / Discharge Time

Pressure Supply		Force*			Discharge Time**	
PSIG	BAR	LBS	OZ	GRAMS	SECONDS	
30	2.1	0.02	0.32	9.1	1.2	1000V down to 100V
					1.2	5000V down to 500V
80	5.5	0.1	1.6	45.4	0.6	1000V down to 100V
					0.6	5000V down to 500V

* 12" (305mm) from target. **Discharge rate taken from 1" away.

Intellistat Ion Air Gun	
Model #	Description
8500	Intellistat Ion Air Gun includes 24VDC Power Supply with Power Cable and 10 feet x 6mm OD compressed air tubing.

Accessories and Components	
Model #	Description
9004	Automatic Drain Filter Separator, 1/4 NPT, 43 SCFM (1,218 SLPM)
9008	Pressure Regulator with Gauge, 1/4 NPT, 50 SCFM (1,415 SLPM)
7905	Static Meter
902067	24VDC Power Supply

INTELLISTAT Ion Air Gun Dimensions

DOWNLOAD drawings at EXAIR.com

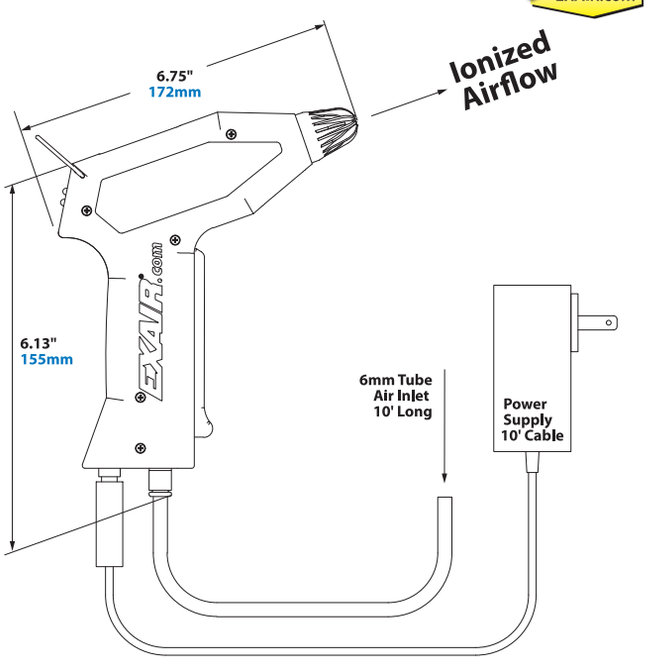

EXAIR_Cat36_25_FROMINDESIGN.indb 153 12/20/24 3:47 PM

INTELLISTAT® Ion Air Nozzle™

A mountable nozzle for hands free static elimination at assembly stations and benchtop applications!

Rated Class 5 for clean rooms and controlled environments per ISO 14644-1



2024 Plant Engineering PRODUCT of the YEAR Bronze Award

What is the INTELLISTAT® Ion Air Nozzle?

The patented Model 8505 Intellistat Ion Air Nozzle is EXAIR's latest hands-free innovation in a long line of static elimination solutions. This intelligent product provides a balanced ionized air stream to neutralize static and remove troublesome particulate during sensitive assembly work, test procedures and clean processes. With a +/-30 volt offset, the Intellistat nozzle was designed to use minimal compressed air while delivering a focused blowoff and exceptional static decay rates capable of reducing 1000 volts to 100 volts in 0.6 seconds. The design includes an efficient, low voltage transformer which converts 120VAC to 24V DC to assure safety. An EXAIR engineered air nozzle delivers the air well below the OSHA standards for noise exposure and dead-end pressure, which maintains safety compliance.



Why the INTELLISTAT® Ion Air Nozzle?

Including a compact stainless steel adjustable mounting bracket, the Intellistat nozzle can be mounted to benchtops and machine frames, for example, to provide hands-free operation when needing both hands to package, test or assemble parts and products. The Intellistat Ion Air Nozzle is designed with other convenient features including a 6mm push-in air connection, and green and red LEDs which indicate proper functionality. The housing is made of durable static dissipative polycarbonate to further minimize any potential for static electricity discharge around sensitive electronics, sensors or materials. The Intellistat Ion Air Nozzle produces an ionized airstream that is essential for removing static, dust, debris and particulate in sterile environments such as pharmaceutical and medical laboratories, clean rooms and electronics labs.

EU Regd. Des. No. 009025463-0001
UK Registered Design No. 6211314

Applications

- Precision parts assembly
- Maintain charge neutrality in laboratory processes
- Remove particles from parts and surfaces in clean environments
- PCB manufacturing
- Maintain cleanliness during electronics manufacturing, assembly and testing
- Eliminate electrostatic discharge
- Remove debris from medical products
- Clean lenses, glass containers and slides

Advantages

- Mountable, hands-free operation
- Quick change emitter point
- Rapid static decay
- Low voltage operation
- OSHA safe air outlet and noise level
- LED indicators for proper and improper functionality

EXAIR_Cat36_25_FROMINDESIGN.indb 154 12/20/24 3:47 PM

How The INTELLISTAT® Ion Air Nozzle Works

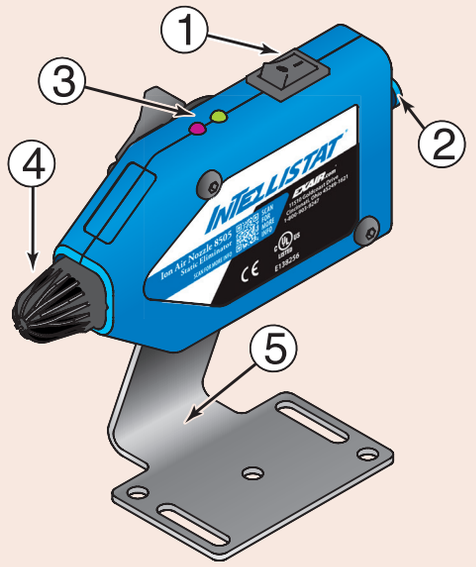

After connecting the 24V power supply, activate the power switch (1) and turn on a compressed air source to supply the 6mm push-in fitting (2) to activate the static eliminating ions and airflow. Proper or improper functionality is indicated by a green or red LED (3). The non-marring nozzle (4) provides quiet performance and OSHA compliance. The compact mounting bracket (5) is included to provide hands-free operation.

INTELLISTAT® Ion Air Nozzle Specifications

Certifications: The Intellistat Ion Air Nozzle is UL listed and CE and RoHS compliant.

Power Supply Input: 100-240VAC — 50/60 Hz 0.7A Max

Power Supply Output: EXAIR Model 902067 Power Supply (24VDC, 1.0A Max) is required for Intellistat Ion Air Nozzle operation. Included with Intellistat Ion Air Nozzle.

Electrical Hazard: Shockless (less than 40 microamperes short circuited)

Do not use near flammable materials or gases.

Balance: ±30V

Operating Temperature: 32°F to 105°F (0-41°C)

Do not use near flammable materials or gases.

Materials of Construction

Plastic Parts: Static Resistant Polycarbonate

Emitters: Stainless Steel

Gas Input: 30psig - 125psig Clean Dry Compressed Air or Nitrogen

Air Connection: 6mm tube

Cleanroom Classification: ISO 14644-1 Class 5, operational.

INTELLISTAT® Ion Air Nozzle Performance

Flow		Air Consumption		Sound Level
PSIG	BAR	SCFM	SLPM	dBA
30	2.1	2.7	76.46	76
80	5.5	5.8	164.21	81

INTELLISTAT® Ion Air Nozzle Force / Discharge Time

Pressure Supply		Force*			Discharge Time**	
PSIG	BAR	LBS	OZ	GRAMS	SECONDS	
30	2.1	0.02	0.32	9.1	1.2	1000V down to 100V
					1.2	5000V down to 500V
80	5.5	0.1	1.6	45.4	0.6	1000V down to 100V
					0.6	5000V down to 500V

* 12" (305mm) from target. **Discharge rate taken from 1" away.

INTELLISTAT® Ion Air Nozzle	
Model #	Description
8505	Intellistat Ion Air Nozzle includes 24VDC Power Supply with Power Cable, 10 feet x 6mm OD compressed air tubing and mounting bracket.

Accessories and Components	
Model #	Description
9004	Automatic Drain Filter Separator, 1/4 NPT, 43 SCFM (1,218 SLPM)
9008	Pressure Regulator with Gauge, 1/4 NPT, 50 SCFM (1,415 SLPM)
7905	Static Meter
902067	24VDC Power Supply

INTELLISTAT® Ion Air Nozzle Dimensions

DOWNLOAD drawings at EXAIR.com

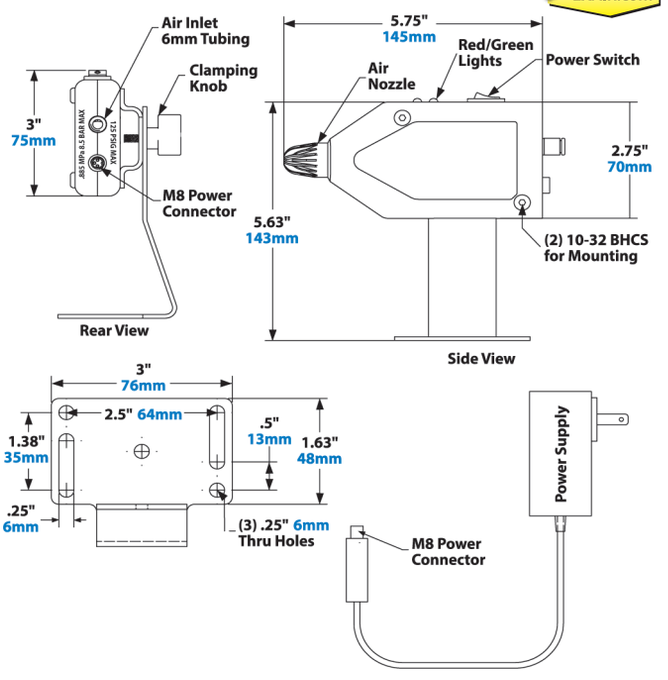

EXAIR_Cat36_25_FROMINDESIGN.indb 155 12/20/24 3:47 PM

VARISTAT Benchtop Ionizer™

Mountable hands-free device for static elimination at assembly stations and benchtop applications



What is the VARISTAT?

The EXAIR Varistat Benchtop Ionizer is a fan-driven static eliminator designed to neutralize static charges on surfaces in demanding industrial settings where static can become troublesome. With the help of ionizing technology, the Varistat supplies a constant stream of ion-balancing airflow to keep products static-free and particulate-free with hands-free operation and without the need of compressed air. Manually adjustable, the Varistat provides full coverage static elimination for workbenches, part assembly, web cleaning and more.

Why the VARISTAT?

The Varistat can be easily mounted on equipment or placed on workbenches to assist with consistent static neutralization. Capable of reducing 1000 volts to 100 volts in 0.8 seconds, the Varistat Ionizer removes surface static at a distance with incredible efficiency. The Varistat is engineered to fit various industrial applications and unique processes by offering customizable options such as an adjustable stand for mounting, selectable voltage, variable fan speed and adjustable polarity.

This static eliminator features ion producing emitter points and two 30 PPI replaceable foam filters to ensure optimal performance over extended periods of use. Also offering a built-in LED display that indicates proper function, the Varistat is designed with important safety features such as its current limiting circuit to protect against electrical hazards, and operating quietly and well below OSHA standards for noise exposure. The Varistat static eliminator is a reliable and effective solution for reducing static charges on sensitive products and protecting against static, dust, debris and other pesky particulate.



Applications

- Web cleaning
- Electronics assembly
- Molding machinery
- Slitting, sheeting and winding
- Cleaning parts
- Shrink wrappers
- Package cleaning
- Printing equipment
- Benchtop assembly

Advantages

- Mountable, hands-free operation
- Rapid static decay
- Low voltage operation
- OSHA safe air outlet and noise level
- LED indicators for proper and improper functionality

EXAIR_Cat36_25_FROMINDESIGN.indb 156 12/20/24 3:47 PM

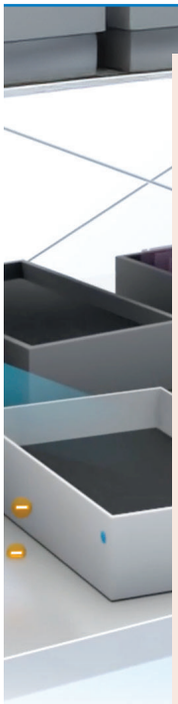

How the VARISTAT Benchtop Ionizer works



After connecting the 115V or 230V power cable, plug into outlet 1) and check to make sure voltage selector switch 2) is set correctly; then activate power switch to activate static eliminating ions and airflow 3). A green light will indicate that power is turned on, improper functionality is indicated by a flashing red LED 4). Adjust fan speed with dial 5), and polarity with "+" and "-" buttons located on top 6). Adjust angle and height with knobs located on the side 7). Mounting bracket included for hands-free operation 8).

VARISTAT Benchtop Ionizer Specifications

Certifications: The Varistat Ionizer is UL Listed, RoHS, OSHA and CE compliant

Input Voltage: 120-240 VAC, 50/60 Hz - Selectable

Input Current: .6A/.4A

Emitter Voltage: 5-7 kV

Balance: ±100V, manually adjustable to <10V

Dimensions: 13 1/2 in. × 10 1/2 in. × 10 in. (343mm × 267mm × 254mm)

Weight: 9.1 lbs (4.13 kg)

Air Output: 10" × 1.5" (254mm × 38mm) - covers up to 16" × 10' (406mm × 3048mm) area

Filter: **Two replaceable foam filters, 30 ppi**

Static Discharge: 0.8 seconds to discharge 1000-100 V - measured 12" from charged area with fans at high speed

Sound Level: 67 dBA measured 3' in front of unit with fans at high speed

Indicator LEDs: Middle green LED indicates unit is on

Blue LEDs indicate balance adjustment positive and negative

Red LED (above green LED):
2 flashes - Electrical Failure
3 flashes - Control Board Malfunction
4 flashes - Fan Malfunction

VARISTAT Mounting Hole Locations:

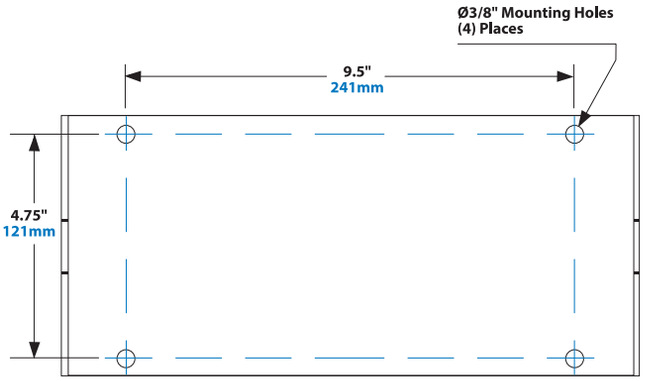

VARISTAT Benchtop Ionizer	
Model #	**Description**
8600	Veristat Benchtop Ionizer with (2) filter kits, 115V power cable
8600-230	Veristat Benchtop Ionizer with (2) filter kits, 230V power cable

Accessories and Components – Replacement Parts	
Model #	**Description**
902425	Replacement Filter (30 PPI)
902358	Fan Speed Knob
7564	Stand Knob
7657	Stand Grommet

VARISTAT Benchtop Ionizer Dimensions

DOWNLOAD drawings at EXAIR.com

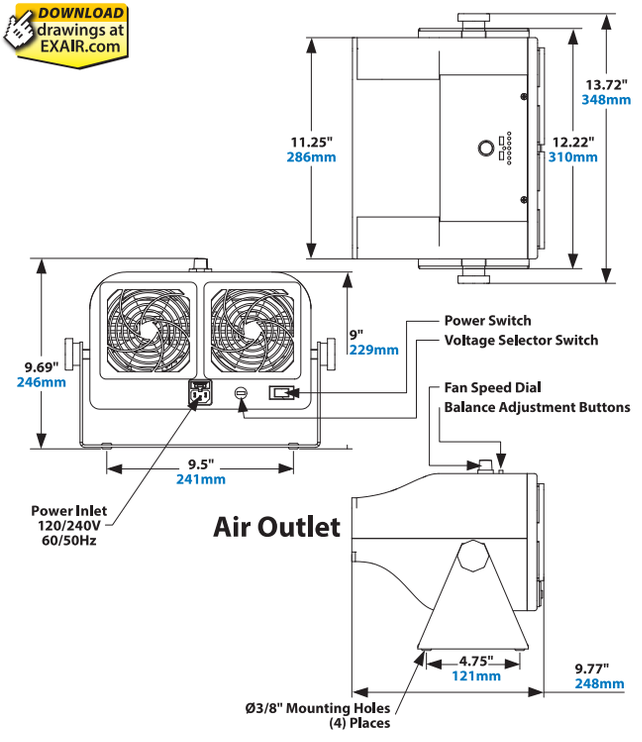

EXAIR_Cat36_25_FROMINDESIGN.indb 157 12/20/24 3:47 PM

E-Vac® Vacuum Generators

Vacuums for lifting, clamping, mounting and placement!



What Is The E-Vac?

EXAIR's compressed air powered E-Vac single stage vacuum generators are the low cost way to create a vacuum for:

- Pick and place
- Clamping
- Lifting
- Chucking
- Alignment
- Surface mounting
- Vacuum forming

E-Vac compressed air powered vacuum pumps provide instantaneous response and are most commonly used for pick and place operations. They are available in a variety of sizes and flows for a wide range of applications.



Why The E-Vac?

The E-Vac vacuum generators have been engineered for high efficiency to minimize air consumption. These single stage, all aluminum units provide consistent, steady vacuum, unlike mechanical vacuum pumps. Dust and small particulates easily pass through the vacuum generator and they have no moving parts, making them maintenance free.

EXAIR's E-Vac Vacuum Generator is available in 2 styles:

In-Line E-Vac Vacuum Generator



In-Line E-Vac

These single stage, cylindrical units are compact and easy to mount at the point of use. They can be held in place by threading them directly onto a compressed air line or with the use of a mounting clip. There are 7 models available for use with porous materials, like cardboard, with vacuum levels up to 21" Hg (71 kPa) and vacuum flows up to 18.5 SCFM (524 SLPM). There are 7 models available for use with non-porous materials such as glass, with vacuum levels up to 27" Hg (91 kPa) with vacuum flows up to 15.8 SCFM (447 SLPM).

Adjustable E-Vac Vacuum Generator


Adjustable E-Vac

This series of vacuum generators permits easy adjustment by simply loosening the locknut and turning the exhaust to increase or decrease the level of vacuum and vacuum flow. This style is also an excellent choice where large particulate may be present and passed through the vacuum system. There are 4 models with adjustable vacuum up to 25" Hg (85 kPa) and vacuum flow up to 81 SCFM (2,294 SLPM).

Applications

- Pick and place parts and equipment
- Bag/package opening
- Label placement
- Vacuum forming
- Mold evacuation
- Vacuum filling
- Leak testing
- Evacuate containers
- Clamping and chucking
- Paper alignment and feed in printing equipment
- Vacuum packaging
- Surface mounting
- Vacuum press for wood veneers and laminates
- Carton forming
- Robotic tooling
- Vacuum liquids for testing

Advantages

- Compact, portable
- Single stage design eliminates fluctuations in vacuum
- Quiet
- Instantaneous vacuum
- Easy to mount at point of use
- Lightweight, rugged
- No moving parts – no maintenance
- 18 models
- Fast response – increases cycle time
- Durable 6061 aluminum construction
- Safe operation - no electricity

EXAIR_Cat36_25_FROMINDESIGN.indb 158 12/20/24 3:47 PM

How to Build An E-Vac System:

1. Select the E-Vac type.

A. Determine if the part to be lifted is porous or non-porous (page 160 and 161).

B. Select a style - In-Line Low Vacuum, In-Line High Vacuum, or Adjustable (pages 160, 161 and 163). The E-Vac type determines max. vacuum available for lifting the part and vacuum cup selection.

Porous	low vacuum generators max. vacuum = 21" Hg (71 kPa)
Non-porous	high vacuum generators max. vacuum = 27" Hg (91 kPa)
Adjustable E-Vac	vacuum generators max. vacuum = 25" Hg (85 kPa)

Need Help Selecting the Correct E-Vac?
Our Application Engineers can assist you in determining the correct model E-Vac and vacuum cups (if required). Call 1-800-903-9247 or visit www.exair.com/appassist.htm

2. Determine the weight of the part.

3. Multiply the weight by the vacuum cup safety factor (see page 165) for the total vacuum cup capacity needed.

4. Determine the number of vacuum cups needed by considering the following:

A. How many cups are needed to distribute the weight for stable lifting and placement?

B. What is the weight that each vacuum cup can lift based on maximum vacuum available (E-Vac type)?

C. Select vacuum cups from chart on page 165 based on max. vacuum available (E-Vac type) and holding weight/cup.

5. To choose an E-Vac model number, consider the entire vacuum system from the E-Vac to the part.

A. Number of vacuum cups per E-Vac.

B. Length and size of vacuum tubing.

C. Vacuum cup size and type.

- The volume of air to evacuate from your vacuum system and the vacuum flow of the E-Vac you've selected (pages 160, 161 and 164) will determine the time it takes from E-Vac activation to vacuum cup holding the part. As the vacuum level in the system increases, the volume of evacuating air decreases.
- A lower volume of air in the vacuum system and/or a higher capacity (SCFM/SLPM) E-Vac will give faster pick-up times.
- An exact pick-up time cannot be calculated.
- If the E-Vac vacuum generator doesn't meet your needs, return it for a different model, with no restocking charge (U.S. and Canada only).

Here is an example using the steps outlined above:

A sheet of material measures 3' × 3' (.91m × .91m) and weighs 25 lbs (11.3kg). Each sheet is in a stack and will be placed on a conveyor.

If it is porous, like wood, and positioned vertically:

1. Choose a porous, low vacuum In-Line E-Vac. The maximum vacuum is 21" Hg (71 kPa).
2. The weight is 25 lbs (11.3kg).
3. If the part is picked-up and hung on an overhead conveyor vertically, the safety factor is 4. The vacuum cup capacity needed is 4 × 25 = 100 lbs (45.4kg).
4. Four vacuum cups will be used for stability when lifting the sheet. Each cup will need at least a 25 lb (11.3kg) capacity. In the table on page 165, at 21"Hg (71 kPa), the Model 900755 Vacuum Cup will hold up to 25.3 lbs (11.5kg).
5. Use 4 small round vacuum cups that are positioned close to one another. The vacuum system has a small to medium volume and pick-up and release time is not critical. To reduce the sound level, use the straight through muffler.

Order: (1) Model 800008M In-Line E-Vac
(4) Model 900755 Vacuum Cups

See Page 168 for other accessories.

If it is non-porous, like glass, and positioned horizontally:

1. Choose a non-porous, high vacuum In-Line E-Vac. The maximum vacuum is 27" Hg (91 kPa).
2. The weight is 25 lbs (11.3kg).
3. If the part is picked-up and placed on a belt conveyor horizontally, the safety factor is 2. The vacuum cup capacity needed is 2 × 25 = 50 lbs (22.7kg).
4. Four vacuum cups will be used for stability when lifting the sheet. Each cup will need at least a 12.5 lb (5.7kg) capacity. In the table on page 165, at 27" Hg (91 kPa), the Model 900754 Vacuum Cup will hold up to 20.8 lbs (9.4kg).
5. Use 4 small round vacuum cups that are positioned close to one another. The vacuum system has a small to medium volume and pick-up and release time is not critical. To reduce the sound level, use the straight through muffler.

Order: (1) Model 810006M In-Line E-Vac
(4) Model 900754 Vacuum Cups

See Page 168 for other accessories.

The Model 840008M Adjustable E-Vac can be substituted for picking up the wood or the glass since the vacuum level and vacuum flow is easily adjusted to suit the porous or non-porous application. The Adjustable E-Vac is especially useful for loads that vary.

EXAIR_Cat36_25_FROMINDESIGN.indb 159 12/20/24 3:47 PM

E-Vac® Vacuum Generators

Low Vacuum Generators For Porous Applications

Low vacuum units up to 21" Hg (71 kPa) with vacuum flows up to 18.5 SCFM (524 SLPM) are typically used for porous materials such as cardboard and delicate materials. The low level vacuum prevents any warping, marring, dimpling or disfiguring of the surface due to excessive vacuum. This style generates more vacuum flow to overcome porosity and leakage. There are 7 In-Line models that vary by flow and vacuum level.

Choose the E-Vac by the SCFM (SLPM) flow that best suits the performance needed for your application (*see Performance Table below*).

E-Vac Kits give you the ability to experiment with an assortment of vacuum cups. Kits include a muffler, an assortment of (4) pairs of vacuum cups (closely matched to the performance of that E-Vac), (2) straight, (2) elbow and (1) tee vacuum fittings, 10' (3m) of vacuum tubing and a mounting clip.

E-Vac Deluxe Kits include the same items as the standard kit with the addition of an automatic drain filter separator for the compressed air supply and pressure regulator (with coupler).



In-Line E-Vac Vacuum Generators for porous applications.



Create your own vacuum system!

In-Line E-Vac with Straight Through Muffler, push-in connectors, vacuum tubing and a round vacuum cup (shown).

In-Line E-Vac Low Vacuum Generators For Porous Applications	Model 1.5 SCFM 43 SLPM	Model 2.1 SCFM 60 SLPM	Model 3.1 SCFM 88 SLPM	Model 5.4 SCFM 153 SLPM	Model 8.4 SCFM 238 SLPM	Model 12.6 SCFM 357 SLPM	Model 16.8 SCFM 476 SLPM
In-Line E-Vac Only	800001	800002	800003	800005	800008	800013	800017
In-Line E-Vac with Straight Through Muffler	800001M	800002M	800003M	800005M	800008M	800013M	800017M
In-Line E-Vac Kit with Straight Through Muffler	801001M	801002M	801003M	801005M	801008M	801013M	801017M
In-Line E-Vac Deluxe Kit with Straight Through Muffler	802001M	802002M	802003M	802005M	802008M	802013M	802017M

Note: Replace 'M' with 'H' for Standard Muffler

In-Line E-Vac Low Vacuum Generator Performance (Porous)

In-Line E-Vac Model	Air Consumption SCFM @ 80 PSIG	Air Consumption SLPM @ 5.5 BAR	Sound Level in dBA			Vacuum Flow (SCFM/SLPM) vs. Vacuum Level ("Hg/ kPa)																	
			No Muffler	Standard Muffler	Straight Through Muffler	0		3/10		6/20		9/31		12/41		15/51		18/61		21/71		Max Vac	
800001	1.5	42.5	80	72	60	1.52	43.0	1.41	39.9	1.25	35.4	1.10	31.1	0.95	26.9	0.85	24.1	0.56	15.9	0.00	0.0	21	71
800002	2.1	59.5	80	72	63	2.22	62.9	2.05	58.0	1.91	54.1	1.77	50.1	1.45	41.1	0.95	26.9	0.56	15.9	0.00	0.0	21	71
800003	3.1	87.8	89	74	70	3.75	106.2	3.52	99.7	3.15	89.2	2.75	77.9	2.15	60.9	1.20	34.0	0.56	15.9	0.00	0.0	21	71
800005	5.4	152.9	92	83	66	5.59	158.3	5.23	148.1	4.51	127.7	3.75	106.2	3.34	94.6	2.51	71.1	1.25	35.4	0.00	0.0	21	71
800008	8.4	237.9	97	88	74	7.70	218.0	6.95	196.8	6.30	178.4	5.30	150.1	4.23	119.8	3.15	89.2	1.31	37.1	0.00	0.0	21	71
800013	12.6	356.8	99	91	78	15.50	438.9	14.50	410.6	13.15	372.4	11.35	321.4	8.70	246.3	4.03	114.1	0.00	0.0	0.00	0.0	18	61
800017	16.8	475.7	101	91	81	18.50	523.8	17.20	487.0	14.70	416.2	12.40	351.1	9.80	277.5	5.00	141.6	0.00	0.0	0.00	0.0	18	61

EXAIR_Cat36_25_FROMINDESIGN.indb 160 12/20/24 3:47 PM

High Vacuum Generators For Non-Porous Applications

High vacuum units up to 27" Hg (91 kPa) with vacuum flows up to 15.8 SCFM (447 SLPM) are typically used for non-porous materials such as glass, steel sheet, and plastic. There are 7 In-Line models that vary by flow and vacuum level.

Choose the E-Vac by the SCFM (SLPM) flow that best suits the performance needed for your application (*see Performance Table below*).

E-Vac Kits give you the ability to experiment with an assortment of vacuum cups. Kits include a muffler, an assortment of (4) pairs of vacuum cups (closely matched to the performance of that E-Vac), (2) straight, (2) elbow and (1) tee vacuum fittings, 10' (3m) of vacuum tubing and a mounting clip.

E-Vac Deluxe Kits include the same items as the standard kit with the addition of an automatic drain filter separator for the compressed air supply and pressure regulator (with coupler).

EXAIR E-Vacs are available in other materials upon request. Contact an application engineer for an alternate material quote.



In-Line E-Vac Vacuum Generators for non-porous applications.



The In-Line E-Vac with Standard Muffler (shown above) is also available with your choice of accessories that can be found on page 168.

In Line E-Vac High Vacuum Generators For Non Porous Applications	Model 2.3 SCFM 65 SLPM	Model 3.3 SCFM 93 SLPM	Model 6.2 SCFM 176 SLPM	Model 8.4 SCFM 238 SLPM	Model 13.2 SCFM 374 SLPM	Model 23.1 SCFM 654 SLPM	Model 30.8 SCFM 872 SLPM
In-Line E-Vac Only	810002	810003	810006	810008	810013	810023	810031
In-Line E-Vac with Straight Through Muffler	810002M	810003M	810006M	810008M	810013M	810023M	810031M
In-Line E-Vac Kit with Straight Through Muffler	811002M	811003M	811006M	811008M	811013M	811023M	811031M
In-Line E-Vac Deluxe Kit with Straight Through Muffler	812002M	812003M	812006M	812008M	812013M	812023M	812031M

Note: Replace 'M' with 'H' for Standard Muffler

In-Line E-Vac High Vacuum Generator Performance (Non-Porous)

In-Line E-Vac Model	Air Consumption SCFM @ 80 PSIG	Air Consumption SLPM @ 5.5 BAR	Sound Level in dBA: No Muffler	Sound Level in dBA: Standard Muffler	Sound Level in dBA: Straight Through Muffler	Vacuum Flow (SCFM/SLPM) vs. Vacuum Level ("Hg/ kPa): 0		3/10		6/20		9/31		12/41		15/51		18/61		21/71		24/81		27/91		Max Vac	
810002	2.3	65.1	86	81	70	1.22	34.5	1.16	33.0	1.00	28.3	0.90	25.5	0.87	24.6	0.74	21.0	0.56	16.0	0.46	13.0	0.20	5.7	0.00	0.0	27	91
810003	3.3	93.4	87	82	73	1.73	49.0	1.59	45.0	1.48	41.9	1.24	35.1	1.09	30.9	1.02	28.9	0.78	22.1	0.67	19.0	0.49	13.9	0.00	0.0	27	91
810006	6.2	175.6	91	82	77	2.75	78.0	2.65	75.0	2.26	64.0	2.05	58.0	1.87	53.0	1.59	45.0	1.13	32.0	0.92	26.0	0.77	21.7	0.00	0.0	27	91
810008	8.4	237.9	97	90	78	4.40	124.6	4.10	116.1	3.75	106.2	3.15	89.2	2.75	77.9	2.39	67.7	1.75	49.6	1.27	36.0	0.99	28.0	0.00	0.0	27	91
810013	13.2	373.8	100	92	83	6.85	194.0	6.50	184.1	5.81	164.5	4.89	138.5	4.12	116.7	3.51	99.4	2.61	73.9	1.92	54.4	1.31	37.1	0.00	0.0	27	91
810023	23.1	654.1	102	92	84	11.95	338.4	11.80	334.1	10.45	295.9	9.02	255.4	8.10	229.4	6.52	184.6	4.54	128.6	3.65	103.4	2.67	75.6	0.00	0.0	27	91
810031	30.8	872.1	105	92	87	15.75	446.0	15.25	431.8	12.67	358.8	11.12	314.9	10.25	290.2	7.97	225.7	5.98	169.3	5.04	142.7	3.41	96.6	0.00	0.0	27	91

EXAIR_Cat36_25_FROMINDESIGN.indb 161 12/20/24 3:47 PM

E-Vac® Vacuum Generators

In-Line E-Vacs

EXAIR manufactures two versions of the In-Line E-Vac – Low Vacuum and High Vacuum. The application will dictate which type of vacuum is most suitable. The dimensions and performance for each model are shown.

How The In-Line E-Vac Works

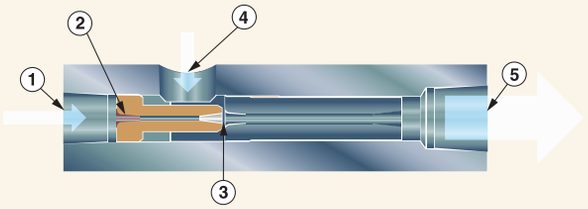

Compressed air flows through the inlet (1), then through a single directed nozzle (2). As the airstream exhausts, it expands and increases in velocity prior to passing through the venturi (3). A vacuum inlet tangential to the primary airflow (4) is located at the suction point between the orifice and the venturi. The airflow that is drawn through the vacuum inlet mixes with the primary airstream, then exhausts on the opposite end (5).

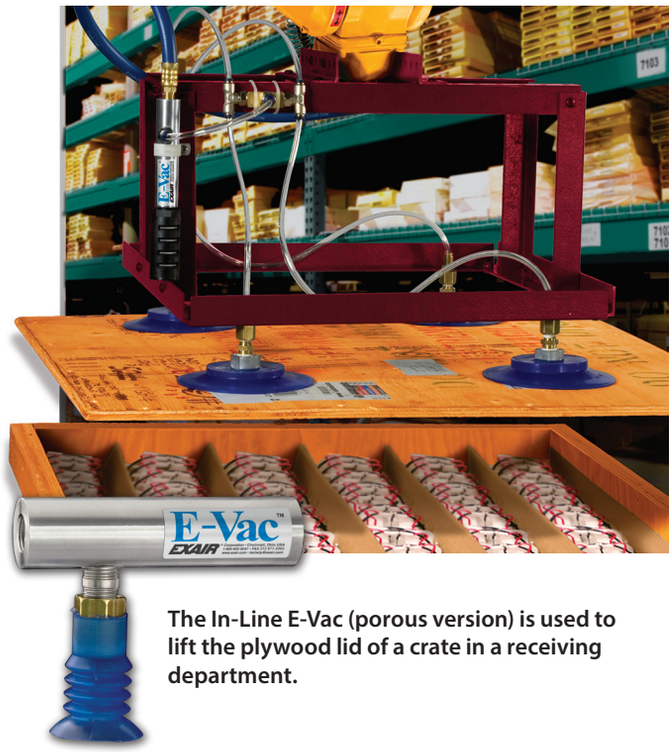

The In-Line E-Vac (porous version) is used to lift the plywood lid of a crate in a receiving department.

Need Help Selecting the Correct E-Vac?

Not sure how much vacuum is required for your application? Our Application Engineers can assist you in determining the correct model E-Vac and vacuum cups (if required). Call 1-800-903-9247 or visit www.exair.com/appassist.htm

In-Line E-Vac Dimensions

DOWNLOAD drawings at EXAIR.com

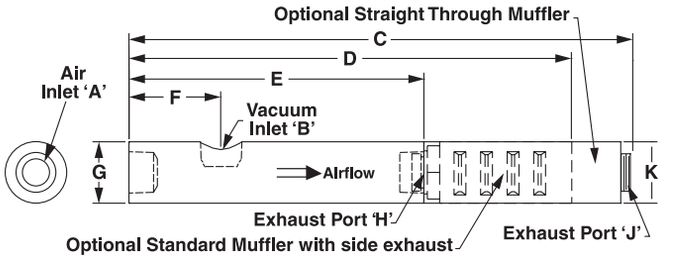

In-Line Vacuum Generator Dimensions

Model	Air Inlet A	Vacuum Inlet B		C	D	E	F	G	H	J	K
800001, 800002, 800003, 810002, 810003, 810006	1/8 NPT	1/8 NPT	in	N/A	N/A	3.00	0.88	0.75	1/4 NPT	N/A	N/A
			mm	N/A	N/A	76	22	19		N/A	N/A
800001H, 800002H, 800003H, 810002H, 810003H, 810006H	1/8 NPT	1/8 NPT	in	N/A	5.00	3.00	0.88	0.75	1/4 NPT	N/A	0.81
			mm	N/A	127	76	22	19		N/A	21
800001M, 800002M, 800003M, 810002M, 810003M, 810006M	1/8 NPT	1/8 NPT	in	5.25	N/A	3.00	0.88	0.75	1/4 NPT	1/4 NPS	0.75
			mm	133	N/A	76	22	19		1/4 NPS	19
800005, 800008, 810008, 810013	1/4 NPT	3/8 NPT	in	N/A	N/A	4.50	1.50	1.00	3/8 NPT	N/A	N/A
			mm	N/A	N/A	114	38	25		N/A	N/A
800005H, 800008H, 810008H, 810013H	1/4 NPT	3/8 NPT	in	N/A	7.50	4.50	1.50	1.00	3/8 NPT	N/A	1.25
			mm	N/A	191	114	38	25		N/A	32
800005M, 800008M, 810008M, 810013M	1/4 NPT	3/8 NPT	in	7.75	N/A	4.50	1.50	1.00	3/8 NPT	3/8 NPS	1.00
			mm	197	N/A	114	38	25		3/8 NPS	25
800013, 800017, 810023, 810031	1/2 NPT	1/2 NPT	in	N/A	N/A	6.00	1.88	1.25	1/2 NPT	N/A	N/A
			mm	N/A	N/A	152	48	32		N/A	N/A
800013H, 800017H, 810023H, 810031H	1/2 NPT	1/2 NPT	in	N/A	9.00	6.00	1.88	1.25	1/2 NPT	N/A	1.25
			mm	N/A	229	152	48	32		N/A	32
800013M, 800017M, 810023M, 810031M	1/2 NPT	1/2 NPT	in	10.25	N/A	6.00	1.88	1.25	1/2 NPT	1/2 NPS	1.25
			mm	260	N/A	152	48	32		1/2 NPS	32

EXAIR_Cat36_25_FROMINDESIGN.indb 162 12/20/24 3:47 PM

Adjustable E-Vac® Vacuum Generators

A simple turn can increase or decrease vacuum and flow!

What Is The Adjustable E-Vac?

EXAIR's Adjustable E-Vac is a series of low cost, compressed air powered vacuum generators where the vacuum and flow rates can be easily adjusted to suit the application requirements. These vacuum pumps are ideal for a wide variety of pick and place, box opening, clamping, lifting, chucking, and surface mounting applications. They are maintenance free and have no moving parts to wear out.

Why The Adjustable E-Vac?

Engineered for high efficiency, the Adjustable E-Vac minimizes compressed air use by allowing it to be tuned to the application. With a simple turn of the unit, the vacuum and flow levels can be changed to overcome porosity and increase or decrease the lifting power. The straight-through, single stage aluminum construction requires no vacuum filter and simply passes contaminants from dirty environments through the unit so there is no clogging or loss of suction.

Adjustable E-Vac is available in 4 sizes that have adjustable vacuum rates up to 25" Hg (85 kPa) and flow rates up to 81 SCFM (2,294 SLPM). Kit configurations that include vacuum cups, fittings, tubing and a mounting clip are available.



The vacuum level of the Adjustable E-Vac can quickly be changed from lifting lightweight pavers to heavy cement blocks.

How The Adjustable E-Vac Works

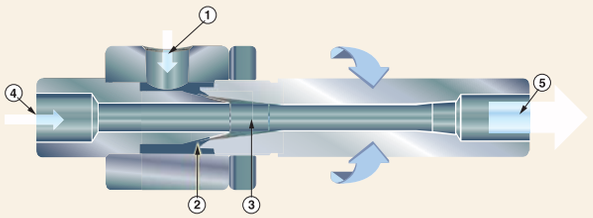

Compressed air flows through the inlet (1), then through an adjustable annular nozzle (2). As the airstream enters the vacuum flow, it expands and increases in velocity (3). A vacuum flow is induced, creating suction (4). The airflow that is drawn through the vacuum inlet mixes with the primary airstream, then exhausts on the opposite end (5).

Adjustable E-Vac Dimensions

DOWNLOAD drawings at EXAIR.com

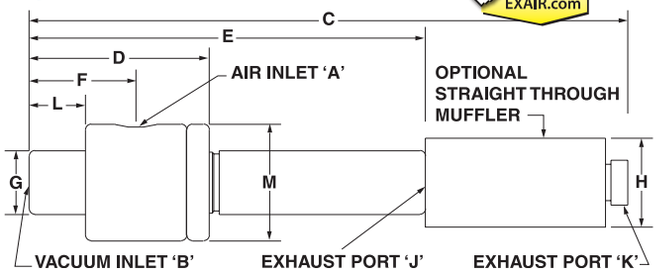

Adjustable Vacuum Generator Dimensions

Model	Air Inlet A	Vacuum Inlet B		C	D	E	F	G	H	L	M	Exhaust Port J	Exhaust Port K
840008	1/8 NPT	1/4 NPT	in	N/A	2.00	4.38	1.19	0.72	N/A	0.63	1.31	1/4 NPT	N/A
			mm	N/A	51	111	30	18	N/A	16	33		
840008M	1/8 NPT	1/4 NPT	in	6.63	2.00	4.38	1.19	0.72	0.75	0.63	1.31	1/4 NPT	1/4 NPS
			mm	168	51	111	30	18	19	16	33		
840015	3/8 NPT	1/2 NPT	in	N/A	2.38	5.44	1.31	0.97	N/A	0.63	1.56	1/2 NPT	N/A
			mm	N/A	60	138	33	25	N/A	16	40		
840015M	3/8 NPT	1/2 NPT	in	9.69	2.38	5.44	1.31	0.97	1.25	0.63	1.56	1/2 NPT	1/2 NPS
			mm	246	60	138	33	25	32	16	40		
840030	3/8 NPT	1/2 NPT	in	N/A	2.50	6.19	1.44	1.22	N/A	0.75	1.94	3/4 NPT	N/A
			mm	N/A	64	157	37	31	N/A	19	49		
840030M	3/8 NPT	1/2 NPT	in	13.63	2.50	6.19	1.44	1.22	2.00	0.75	1.94	3/4 NPT	3/4 NPS
			mm	346	64	157	37	31	51	19	49		
840060	1/2 NPT	3/4 NPT	in	N/A	2.75	6.50	1.56	1.47	N/A	0.75	2.19	1 NPT	N/A
			mm	N/A	70	165	40	37	N/A	19	56		
840060M	1/2 NPT	3/4 NPT	in	13.94	2.75	6.50	1.56	1.47	2.00	0.75	2.19	1 NPT	1 NPS
			mm	354	70	165	40	37	51	19	56		

EXAIR_Cat36_25_FROMINDESIGN.indb 163 12/20/24 3:47 PM

E-Vac® Vacuum Generators

Adjustable E-Vac Vacuum Generators

Choose the Adjustable E-Vac by the SCFM (SLPM) flow that best suits the performance needed for your application (*see Performance Table below*).

Adjustable E-Vac Kits give you the ability to experiment with an assortment of vacuum cups. E-Vac Kits include a muffler, an assortment of (4) pairs of vacuum cups (closely matched to the performance of that E-Vac), (2) straight, (2) elbow and (1) tee vacuum fittings, 10' (3m) of vacuum tubing and a mounting clip.

Adjustable E-Vac Deluxe Kits include the same items as the standard kit with the addition of an automatic drain filter separator for the compressed air supply and pressure regulator (with coupler).



Adjustable E-Vac Vacuum Generators have vacuum levels up to 25" Hg (85 kPa) that can be used with porous and non-porous materials.

Adjustable E-Vac Performance

The amount of vacuum created varies with the porosity of the load being picked up. Units come from the factory set to 15" Hg (51 kPa). A maximum of 25" Hg (85 kPa) can be achieved on a solid, non-porous surface, but will require increasing the air consumption and vacuum flow.

Adjustable E Vac	Model 8.2 SCFM 232 SLPM	Model 15.4 SCFM 436 SLPM	Model 26.4 SCFM 748 SLPM	Model 62.7 SCFM 1,775 SLPM
Adjustable E-Vac Only	840008	840015	840030	840060
Adjustable E-Vac with Straight Through Muffler	840008M	840015M	840030M	840060M
Adjustable E-Vac Kit with Straight Through Muffler	841008M	841015M	841030M	841060M
Adjustable E-Vac Deluxe Kit with Straight Through Muffler	842008M	842015M	842030M	842060M

Adjustable Vacuum Generator Performance (15" Hg/ 51 kPa)

Model	Air Consumption SCFM @ 80 PSIG	Air Consumption SLPM @ 5.5 BAR	Sound Level in dBA		Vacuum Flow (SCFM/SLPM) vs. Vacuum Level ("Hg / kPa) (Set to 15" Hg/51 kPa)											
			No Muffler	Straight Through Muffler	0		3/10		6/20		9/31		12/41		15/51	
840008	8.2	232.2	89	77	5.80	164.2	4.68	132.6	3.71	105.0	2.59	73.4	1.53	43.2	0.0	0.0
840015	15.4	436.1	95	77	18.70	529.5	16.00	453.1	12.02	340.3	7.75	219.4	4.05	114.7	0.0	0.0
840030	26.4	747.5	99	74	36.70	1039.2	32.00	906.1	25.63	725.8	17.68	500.5	7.69	217.8	0.0	0.0
840060	62.7	1775.4	107	85	81.00	2293.6	67.00	1897.2	56.33	1595.1	29.00	821.2	11.13	315.3	0.0	0.0

Adjustable Vacuum Generator Performance (25" Hg/ 85 kPa)

Model	Air Consumption SCFM @ 80 PSIG	Air Consumption SLPM @ 5.5 BAR	Sound Level in dBA		Vacuum Flow (SCFM/SLPM) vs. Vacuum Level ("Hg / kPa) (Set to 25" Hg/85 kPa)																	
			No Muffler	Straight Through Muffler	0		3/10		6/20		9/31		12/41		15/51		18/61		21/71		24/81		25/85	
840008	12.2	345.5	104	89	5.80	164.2	5.58	157.9	5.18	146.5	4.80	135.9	4.33	122.5	3.83	108.3	2.94	83.2	1.93	54.5	0.37	10.5	0.0	0.0
840015	25.9	733.4	107	89	18.00	509.7	16.53	467.9	15.70	444.6	14.18	401.4	12.13	343.3	8.98	254.1	5.65	160.0	2.69	76.1	0.55	15.6	0.0	0.0
840030	44.8	1268.6	107	82	32.00	906.1	29.00	821.2	26.83	759.8	24.12	682.9	20.92	592.3	14.63	414.1	9.90	280.3	6.13	173.7	1.19	33.8	0.0	0.0
840060	105.2	2978.8	114	92	70.00	1982.1	66.33	1878.3	62.33	1765.0	55.50	1571.5	45.00	1274.2	30.67	868.4	18.37	520.1	8.38	237.4	2.10	59.5	0.0	0.0



Compressed air use is minimized by selecting the exact vacuum level required to lift the heavy, porous cardboard cartons.



A series of bellows cups lift one plastic part at a time off of a pallet.

EXAIR_Cat36_25_FROMINDESIGN.indb 164 12/20/24 3:47 PM

Choosing A Suitable Vacuum Cup

Round Cups are best suited to smooth, flat surfaces. They will grip and release quickly. These cups hold their shape with extended use and grip well to vertical surfaces. Round cups with cleats are better at lifting heavy loads. Cups without cleats can be used for light lifting.



Oval Cups provide the most vacuum due to the larger surface area. They provide more vacuum power than round cups and are suited to lifting heavy loads. They are designed to handle flat rigid sheet materials like wood, glass, cardboard boxes and composites.



Bellows Cups are best suited to textured, uneven surfaces. The folds, called convolutions, provide a collapsible area that allows the cup to quickly compress when it touches the uneven surface. The attach and release time is greater due to the significant volume of the cup.



Vacuum Cup Safety Factor

A safety factor of 2 is recommended when the vacuum cup is positioned horizontally.

A safety factor of 4 is recommended when the vacuum cup is positioned vertically.

Some companies or local codes may require a specific safety factor.

Using The Tables Below

Determine the weight of the part to be lifted. Multiply it by the safety factor of (2) when the cup will be positioned horizontally, or by (4) when positioned vertically.

Using the table below, look through the numbers highlighted in orange for the weight capacity per vacuum cup. Use enough vacuum cups to distribute the weight evenly for stable lifting and placement. The model number(s) for the vacuum cup(s) that can handle that weight are directly above (in that column) and are highlighted in blue. Details for each vacuum cup can be found on page 166.

To the left of the vacuum cup weight you've selected (in that same row) is the vacuum level highlighted in green that is needed. Performance data for the In-Line E-Vacs designed for specific vacuum levels can be found on pages 160-161. For loads that vary, Adjustable E-Vacs are the best choice (performance shown on page 163).

Weight in lbs that a vacuum cup can hold at a given vacuum

Vacuum Cup Models		900762 900766	900752 900767	900763	900764	900753 900768	900754 900769	900765	900755 900770	900756 900757 900758 900771	900759	900760	900761
Area of cup in^2		0.4	0.8	1.0	1.5	1.8	3.1	4.4	4.9	8.3	14.2	19.6	28.3
Vacuum "Hg	5	0.5	1.0	1.2	1.8	2.2	3.9	5.3	6.0	10.2	17.4	24.1	34.7
	10	1.0	1.9	2.5	3.7	4.3	7.7	10.7	12.1	20.4	34.8	48.2	69.4
	15	1.5	2.9	3.7	5.5	6.5	11.6	16.0	18.1	30.6	52.3	72.3	104.2
	20	2.1	3.9	4.9	7.4	8.7	15.4	21.4	24.1	40.7	69.7	96.4	138.9
	21	2.2	4.1	5.2	7.8	9.1	16.2	22.4	25.3	42.8	73.2	101.3	145.8
	27	2.8	5.2	6.6	10.0	11.7	20.8	28.9	32.6	55.0	94.1	130.2	187.5

Weight in kilograms that a vacuum cup can hold at a given vacuum

Vacuum Cup Models		900762 900766	900752 900767	900763	900764	900753 900768	900754 900769	900765	900755 900770	900756 900757 900758 900771	900759	900760	900761
Area of cup cm^2		3	5	6	10	11	20	28	32	54	92	127	182
Vacuum kPa	17	0.2	0.4	0.6	0.8	1.0	1.7	2.4	2.7	4.6	7.9	10.9	15.7
	34	0.5	0.9	1.1	1.7	2.0	3.5	4.8	5.5	9.2	15.8	21.9	31.5
	51	0.7	1.3	1.7	2.5	3.0	5.2	7.3	8.2	13.9	23.7	32.8	47.2
	68	0.9	1.7	2.2	3.4	3.9	7.0	9.7	10.9	18.5	31.6	43.7	63.0
	71	1.0	1.8	2.3	3.5	4.1	7.3	10.2	11.5	19.4	33.2	45.9	66.1
	91	1.3	2.4	3.0	4.5	5.3	9.4	13.1	14.8	25.0	42.7	59.1	85.0

EXAIR_Cat36_25_FROMINDESIGN.indb 165 12/20/24 3:47 PM

Vacuum Cup Dimensions

EXAIR vacuum cups are vinyl. They are ideal for general purpose applications and provide excellent resistance to wear. The Durometer rating (used to indicate the flexibility and stiffness of the cup) is A50. Temperature range is 32° to 125°F (0° to 52°C).

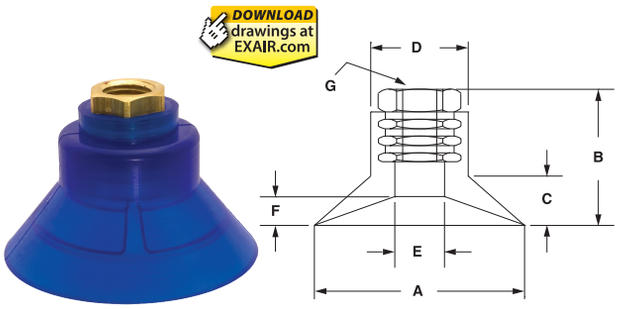

Small Round

Vacuum Cups - Small Round									
Model		A	B	C	D	E	F	G	Cleats
900752	in	1.00	1.12	0.25	0.81	0.45	0.17	1/4 FNPT	No
	mm	25	28	6	21	11	4		
900753	in	1.50	0.90	0.28	1.25	1.06	0.12	1/4 FNPT	Yes
	mm	38	23	7	32	27	3		
900754	in	2.00	1.00	0.25	1.56	1.31	0.18	1/4 FNPT	Yes
	mm	51	25	6	40	33	5		
900755	in	2.50	1.80	0.72	1.35	0.95	0.62	1/4 FNPT	Yes
	mm	64	46	18	34	24	16		
900756	in	3.50	1.10	0.56	0.98	0.51	0.37	1/4 FNPT	No
	mm	89	28	14	25	13	9		

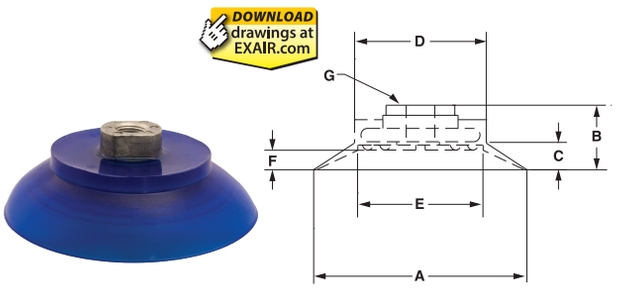

Large Round

Vacuum Cups - Large Round									
Model		A	B	C	D	E	F	G	Cleats
900757	in	3.25	1.15	0.50	2.23	1.87	0.37	3/8 FNPT	Yes
	mm	83	29	13	57	47	9		
900758	in	3.25	1.15	0.50	2.23	1.87	0.37	1/4 FNPT	Yes
	mm	83	29	13	57	47	9		
900759	in	4.25	1.18	0.50	2.75	2.43	0.37	3/8 FNPT	Yes
	mm	108	30	13	70	62	9		
900760	in	5.00	1.75	1.12	3.25	2.65	0.62	3/8 FNPT	Yes
	mm	127	44	28	83	67	16		
900761	in	6.00	1.31	0.50	4.75	4.90	0.12	1/2 FNPT	Yes
	mm	152	33	13	121	124	3		

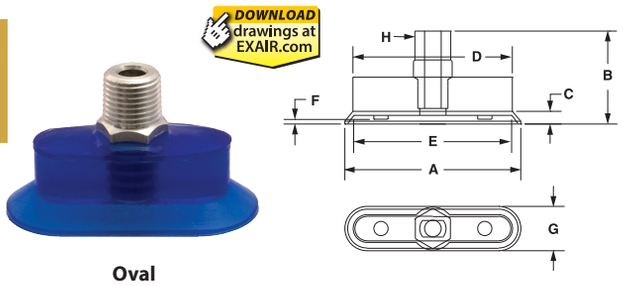

Oval

Vacuum Cups - Oval										
Model		A	B	C	D	E	F	G	H	Cleats
900762	in	1.00	1.06	0.12	0.81	0.76	0.09	0.50	1/8 MNPT	No
	mm	25	27	3	21	19	2	13		
900763	in	2.00	1.06	0.12	1.81	1.76	0.09	0.50	1/8 MNPT	No
	mm	51	27	3	46	45	2	13		
900764	in	1.73	1.03	0.21	1.35	1.21	0.09	0.87	1/8 MNPT	Yes
	mm	44	26	5	34	31	2	22		
900765	in	2.96	0.93	0.19	0.92	2.34	0.20	1.47	1/8 FNPT	No
	mm	75	24	5	23	59	5	37		

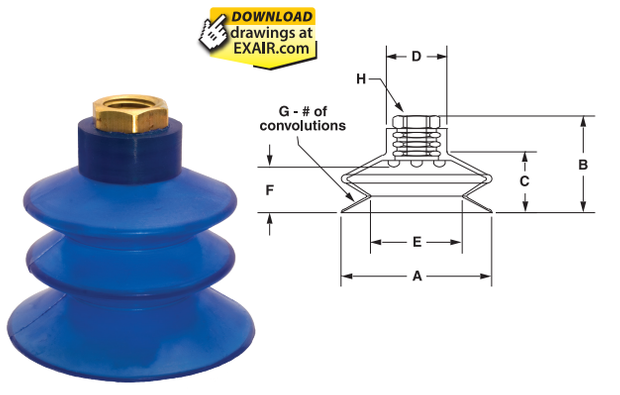

Bellows

Vacuum Cups - Bellows										
Model		A	B	C	D	E	F	G	H	Cleats
900766	in	0.73	1.43	0.75	0.67	0.45	0.79	3	1/4 FNPT	No
	mm	19	36	19	17	11	20			
900767	in	1.00	1.48	0.85	0.56	0.44	0.85	4	1/8 FNPT	No
	mm	25	38	22	14	11	22			
900768	in	1.50	1.12	0.71	1.06	1.00	0.31	1	1/4 FNPT	Yes
	mm	38	28	18	27	25	8			
900769	in	2.00	1.54	0.89	1.00	1.17	0.68	1	1/4 FNPT	Yes
	mm	51	39	23	25	30	17			
900770	in	2.50	2.40	1.75	1.00	1.12	1.80	2	1/4 FNPT	No
	mm	64	61	44	25	28	46			
900771	in	3.25	3.00	2.20	1.00	1.53	2.00	2	3/8 FNPT	No
	mm	83	76	56	25	39	51			

MNPT = NPT Male
FNPT = NPT Female

EXAIR_Cat36_25_FROMINDESIGN.indb 166 12/20/24 3:47 PM

Increased Energy And Vacuum Efficiency

Energy and vacuum efficiency are not limited to the Adjustable E-Vac vacuum generators. All E-Vac styles and models can offer significant improvements when looking to reduce the amount of compressed air used for a specific vacuum application. Once the appropriate amount of vacuum and flow for the application are determined, it is important to select the appropriate model that will deliver the best performance while using the least amount of compressed air that it takes to do the job.

Many companies have a centralized vacuum system where the vacuum is generated at a location that is far away from the point of use. The long runs of piping through the plant produce line loss and it is often difficult to obtain that perfect balance of vacuum and flow required for an application. The compact, In-line E-Vac vacuum generators eliminate this problem since they can be mounted at the point where the vacuum source is needed. EXAIR's Application Engineers can help you to select the E-Vac vacuum generator and vacuum cups that provide the right amount of lifting capability while minimizing the amount of compressed air usage.

Other Applications For E-Vac

E-Vacs are used in many other "non-lifting" applications. They are commonly used for vessel evacuation, clamping, chucking, and other work holding applications. Many types of automated equipment use vacuum to evacuate, grip, hold, align and insert parts. These vacuums can be used for surface mounting, vacuum packaging, bag opening, label placement, carton forming and container evacuation.

Another popular application is using the E-Vac for liquid sampling. This process can easily be accomplished using an E-Vac vacuum generator attached to a liquid holding tube. When the tube is dipped into a vat, tank or container, the compressed air is turned on so it draws a specific volume of liquid up into the tube. When the compressed air is turned off, the liquid flows from the tube and can be dispensed into a container or machine to be analyzed.

Accessories Needed To Build Your Vacuum System

EXAIR offers a variety of mufflers, tubing, check valves, and fittings, shown on page 168, that make it easy to build a vacuum system best suited to your vacuum application.

When using E-Vac vacuum generators, it is important to use a source of clean, dry compressed air that will keep them operating at their peak performance. Automatic drain filter separators to keep the compressed air free of contaminants and moisture can be found on page 234. Oil removal filters that remove oil particulates that are common to many compressed air systems are also shown. Pressure regulators, shutoff valves, compressed air hose, and solenoid valves (to electrically turn the compressed air on and off) can be found on pages 234 through 239.

- **Mufflers**

  Optional silencing mufflers are available that permit maximum exhaust of the E-Vac unit so cycle speed is not reduced. The Standard Muffler (for use with In-Line E-Vacs only) has a closed end and is suitable for applications that are free of dust and debris. The Straight Through Muffler is recommended where particulates are present since it will not accumulate debris that can erode performance. Straight Through Mufflers offer the best sound level reduction (up to 26 dBA). Sound levels are shown on pages 160, 161 and 164.

- **Fittings and Tubing**

  The vacuum port of the E-Vac has an NPT thread (a vacuum cup can be threaded directly into it). For vacuum cups that are remotely located, push-in connector fittings (most have global threads for use with NPT and BSP), or hose barb fittings can be installed on the E-Vac and the vacuum cup. Polyurethane vacuum tubing is available (10', 20', 30', 40' and 50' lengths) to connect them. For best performance, the length of the tubing should be minimized to achieve the best attach and release times.

- **Check Valve**

  A vacuum check valve is available to hold the vacuum in case of compressed air loss. E-Vac vacuum generators that are used without a check valve will release the load if there is a significant drop in compressed air pressure or the supply of compressed air is lost.

EXAIR_Cat36_25_FROMINDESIGN.indb 167 12/20/24 3:47 PM

E-Vac® Vacuum Generators



Mufflers

Standard

Model #	Description	Thread
900800	Standard Muffler	1/4 MNPT
900801	Standard Muffler	3/8 MNPT
900802	Standard Muffler	1/2 MNPT



Straight Through

Model #	Description	Thread
890001	Straight Through	1/4 MNPS
890002	Straight Through	3/8 MNPS
890003	Straight Through	1/2 MNPS
890004	Straight Through	3/4 MNPS
890005	Straight Through	1 MNPS



Check Valves

Model #	Description	Thread
900804	Check Valve	1/4 FNPT
900805	Check Valve	3/8 FNPT
900806	Check Valve	1/2 FNPT



E-Vac Accessories

Push-In Connector

Model #	Description
900773	1/4 Tube × 1/8 FNPT
900774	1/4 Tube × 1/8 Male Global Thread
900775	1/4 Tube × 1/4 Male Global Thread
900776	1/4 Tube × 3/8 Male Global Thread
900777	3/8 Tube × 1/8 Male Global Thread
900778	3/8 Tube × 1/4 Male Global Thread
900779	3/8 Tube × 3/8 Male Global Thread
900780	3/8 Tube × 1/2 Male Global Thread



Push-In Swivel Elbow Connector

Model #	Description
900781	1/4 Tube × 1/8 Male Global Thread
900782	1/4 Tube × 1/4 Male Global Thread
900783	1/4 Tube × 3/8 Male Global Thread
900784	3/8 Tube × 1/8 Male Global Thread
900785	3/8 Tube × 1/4 Male Global Thread
900786	3/8 Tube × 3/8 Male Global Thread
900787	3/8 Tube × 1/2 Male Global Thread



Push-In Swivel Branch Tee Connector

Model #	Description
900788	1/4 Tube × 1/8 Male Global Thread
900789	1/4 Tube × 1/4 Male Global Thread
900790	3/8 Tube × 1/4 Male Global Thread
900791	3/8 Tube × 3/8 Male Global Thread

MNPT = NPT Male
FNPT = NPT Female



E-Vac Accessories - continued

Push-In Bulkhead Connector

Model #	Description
900792	Female Union - 1/4 Tube × 1/4 Tube
900793	Female Union - 3/8 Tube × 3/8 Tube
900809	Female Union - 1/4 Tube × 1/4 NPT
900810	Female Union - 3/8 Tube × 1/4 NPT



Vacuum Tubing

Tubing lengths are 10', 20', 30', 40', and 50'. Select the tubing model number (diameter) and indicate the length with a dash. Example: A Model 900795-20 is 1/4" tubing × 20' long.

Model #	Description
900795-	1/4" O.D. Polyurethane Tubing
900796-	3/8" O.D. Polyurethane Tubing



Mounting Clip

Model #	Description
900798	Mounting Clip with Strap



Hose Barbs

Model #	Description
900969	1/4 MNPT × 1/4 Hose Barb
900970	1/4 MNPT × 3/8 Hose Barb
900971	1/4 MNPT × 1/2 Hose Barb
900972	1/2 MNPT × 1/4 Hose Barb
900973	1/2 MNPT × 3/8 Hose Barb
900974	1/2 MNPT × 1/2 Hose Barb
900975	1/2 MNPT × 3/4 Hose Barb
900976	3/4 MNPT × 3/8 Hose Barb
900977	3/4 MNPT × 1/2 Hose Barb
900978	3/4 MNPT × 3/4 Hose Barb
900979	3/4 MNPT × 1 Hose Barb
900980	1 MNPT × 3/4 Hose Barb
900981	1 MNPT × 1 Hose Barb



Hose

Hose lengths are 10', 20', 30', 40', and 50'. Select the hose model number (diameter) and indicate the length with a dash. Example: A Model 901845-20 is 1/4" hose × 20' long.

Model #	Description
901845-	1/4" I.D. Hose
900689-	3/8" I.D. Hose
900690-	1/2" I.D. Hose
900063-	3/4" I.D. Hose
900064-	1" I.D. Hose



Vacuum Gauge

Model #	Description	Thread
900811	Vacuum Gauge (-30" Hg/-1 BAR/-100 kPa-0)	1/8 MNPT

MNPT = NPT Male
FNPT = NPT Female

EXAIR_Cat36_25_FROMINDESIGN.indb 168 12/20/24 3:47 PM

An INTELLIGENT COMPRESSED AIR® Product

Line Vac™

Convey parts, materials, waste - with no moving parts!

- ☑ **High Conveying Rates!**
- ☑ **Ideal For Long Distance!**
- ☑ **Mounting Brackets Available!**



What Is The Line Vac?

A fast, low cost way to convey:

- Plastic pellets
- Scrap trim
- Textiles
- Bulk solids
- Food products
- Chips
- Paper
- Pills/tablets
- Small parts
- Shavings
- Sawdust
- Granules



EXAIR's compressed air operated Line Vac connects to standard hose or tube to create a powerful in-line conveyor. The compact design features large throat diameters for maximum throughput capability. Eleven sizes in aluminum and ten in stainless steel are suited to a wide variety of transfer applications.

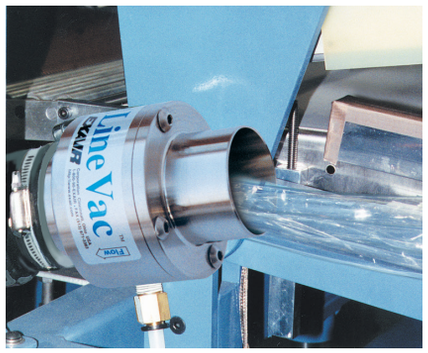

A Model 6084 2" (51mm) Line Vac transports scrap cellophane trim to a waste barrel.

Why The Line Vac?

Line Vac conveyors are ideal for moving large volumes of material over long distances. A small amount of compressed air is injected through directed nozzles to produce a vacuum on one end and high output flows on the other, with instantaneous response. The material flow rate is easily controlled with a pressure regulator. An optional bracket permits easy mounting. No moving parts or electricity assures maintenance free operation.

Built to Last 5 yr. WARRANTY
See our Terms & Conditions



The Model 6083 1-1/2" (38mm) Line Vac conveys plastic granules to the gravity feed hopper on an extruder.

Applications

- Hopper loading
- Fiber tensioning
- Material conveying
- Waste/trim removal
- Chip removal
- Part transfer
- Filling operations

Advantages

- Compact
- Quiet
- No moving parts
- Fits standard hose or tube
- Aluminum or stainless steel
- Many sizes
- High throughput capability

EXAIR_Cat36_25_FROMINDESIGN.indb 169 12/20/24 3:47 PM

Line Vac

How The Line Vac Works

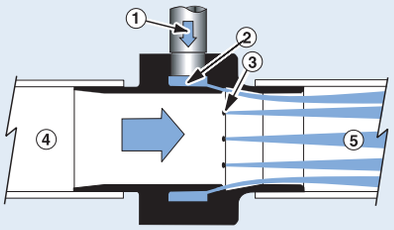

Compressed air flows through the inlet (1) into an annular plenum chamber (2). It is then injected into the throat through directed nozzles (3). These jets of air create a vacuum at the intake (4) which draws material in and accelerates it through the unit (5) for conveying over long vertical or horizontal distances.



Line Vacs are available in many sizes in both aluminum and stainless steel.

Line Vac Conveying Rates

Line Vacs are available in a number of styles, materials, and sizes. Each has a large, smooth, straight bore that allows as much material to pass through as possible. Infinite control of the flow rate through the Line Vac can be controlled by a pressure regulator. Kits include a pressure regulator that is sized properly for flow.

The actual conveying rate is affected by the size, mass and geometry of the part to be conveyed along with the length, lift and number of bends in the hose, tube or pipe. These variables make it difficult to determine the exact conveying rate for any product, however, our Application Engineers can assist you by comparing the material you want to convey with something that has already been tested.

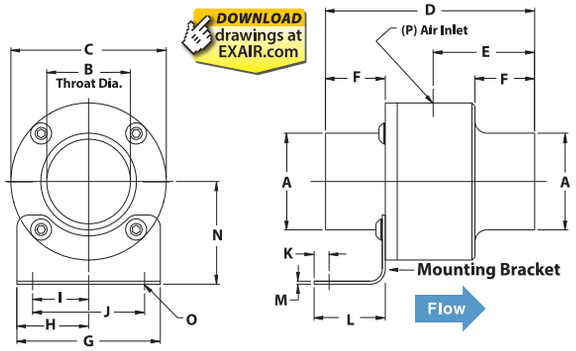

Line Vac Dimensions

Line Vac Models			Hose Size A		B	C	D	E	F	G	H	I	J	K	L	M	N	O	P
Alum.	St. St.	Heavy Duty																	
6078	6058, 6058-316	N/A	in	0.38	0.19	1	2.18	1	0.63	1.25	0.63	0.41	0.82	0.17	1.13	0.06	1.07	0.18	1/8 NPT
			mm	10	5	25	55	25	16	32	16	10	21	4	29	2	27	5	
6079	6059, 6059-316	N/A	in	0.50	0.31	1.25	2.62	1.23	0.75	1.25	0.63	0.34	0.68	0.13	1	0.06	1.18	0.18	1/8 NPT
			mm	13	8	32	66	31	19	32	16	9	17	3	25	2	30	5	
6080	6060, 6060-316, HT6060, HT6060-316	150075	in	0.75	0.50	1.88	3.88	1.88	1	2	1	0.76	1.52	0.25	1.38	0.06	1.44	0.20	1/4 NPT
			mm	19	13	48	99	48	25	51	25	19	39	6	35	2	37	5	
6081	6061, 6061-316, HT6061, HT6061-316	150100	in	1	0.75	2.13	3.88	1.88	1	2	1	0.65	1.30	0.26	1.32	0.06	1.56	0.20	1/4 NPT
			mm	25	19	54	99	48	25	51	25	17	33	7	34	2	40	5	
6082	6062, 6062-316, HT6062, HT6062-316	150125	in	1.25	1	2.38	3.88	1.88	1	2.50	1.25	1	2	0.31	1.61	0.06	1.68	0.28	1/4 NPT
			mm	32	25	61	99	48	25	64	32	25	51	8	41	2	43	7	
6083	6063, 6063-316, HT6063, HT6063-316	150150	in	1.50	1.25	2.75	4.38	2.13	1.25	2.50	1.25	0.86	1.73	0.25	1.44	0.06	1.88	0.28	3/8 NPT
			mm	38	32	70	111	54	32	64	32	22	44	6	37	2	48	7	
6084	6064, 6064-316, HT6064, HT6064-316	150200	in	2	1.75	3.25	4.38	2.13	1.25	3	1.50	1.17	2.34	0.28	1.48	0.06	2.13	0.28	3/8 NPT
			mm	51	45	83	111	54	32	76	38	30	59	7	38	2	54	7	
6085	6065, 6065-316, HT6065, HT6065-316	150250	in	2.50	2.25	3.75	4.38	2.13	1.25	3	1.50	1	2	0.31	1.44	0.06	2.38	0.28	3/8 NPT
			mm	64	57	95	111	54	32	76	38	25	51	8	37	2	60	7	
6086	6066, 6066-316, HT6066, HT6066-316	150300	in	3	2.75	4.25	5.63	2.75	1.75	3.25	1.63	1.20	2.41	0.41	1.44	0.06	2.63	0.28	1/2 NPT
			mm	76	70	108	143	70	45	83	41	31	61	10	37	2	67	7	
6087	6067	N/A	in	4	3.75	5.25	5.63	2.75	1.75	3.25	1.63	1.34	2.70	0.31	1.59	0.06	3.13	0.28	1/2 NPT
			mm	102	95	133	143	70	45	83	41	34	69	8	40	2	80	7	
6088	N/A	N/A	in	5	4.75	6.25	5.63	2.75	1.75	4.13	2.06	1.70	3.47	0.33	1.52	0.06	3.63	0.28	1/2 NPT
			mm	127	121	159	143	70	45	105	52	43	88	8	39	2	92	7	

EXAIR_Cat36_25_FROMINDESIGN.indb 170 12/20/24 3:47 PM

Line Vac Performance

80 PSIG (5.5 BAR)	Air Consumption		Vacuum	
Model	SCFM	SLPM	"H_20	kPa
6058, 6058-316, 6078	5.60	158	-120	-29.9
6059, 6059-316, 6079	7	198	-100	-24.9
6060, HT6060, 6060-316, HT6060-316, 6080	10.70	303	-72	-18
6061, HT6061, 6061-316, HT6061-316, 6081	14.70	416	-42	-11
6062, HT6062, 6062-316, HT6062-316, 6082	25.90	733	-42	-11
6063, HT6063, 6063-316, HT6063-316, 6083	33	934	-36.8	-9
6064, HT6064, 6064-316, HT6064-316, 6084	45	1,274	-28.5	-7
6065, 6065-316, HT6065, HT6065-316, 6085	58.50	1,656	-23.5	-6
6066, 6066-316, HT6066, HT6066-316, 6086	68.50	1,939	-14.7	-4
6067, 6087	95	2,690	-13.6	-3.4
6088	128	3,625	-10.5	-2.6



Line Vac Kits include a Line Vac, mounting bracket, filter separator and pressure regulator (with coupler).

Sound levels for the individual Line Vac units are not provided. The length, bends and configuration of the hose, tube or pipe used in conjunction with the Line Vac to form the complete conveying system will determine the actual sound levels (which can vary greatly).

Selecting The Right Model

Line Vac is available in a wide range of sizes to fit your application. Some of the criteria used to select the proper model are:

- Diameter of parts being conveyed
- Diameter of hose or tube
- Rate (weight or volume)
- Stainless steel (Type 303 and 316) or aluminum

Aluminum is the economical choice for general purpose conveying. Our standard stainless steel models (Type 303) offer good corrosion resistance and are ideal for food service, abrasive or corrosive applications. For critical applications including certain foods and pharmaceutical products, Type 316 stainless steel models provide excellent corrosion resistance.

Line Vac Comparison		
Material Type	Temperature Rating	Corrosion Resistance
Aluminum Line Vac	275°F (135°C)	Fair
Stainless Steel Line Vac (Type 303)	400°F (204°C)	Good
Stainless Steel Line Vac (Type 316)	400°F (204°C)	Excellent
High Temperature Stainless Steel Line Vac (Type 303)	900°F (482°C)	Good
High Temperature Stainless Steel Line Vac (Type 316)	900°F (482°C)	Excellent
Heavy Duty Line Vac Hardened Alloy Construction	400°F (204°C)	Good
Flanged Line Vac (Type 316)	400°F (204°C)	Excellent

The High Temperature Line Vac models are suited for temperatures up to 900°F (482°C). Frequently used for sampling hot flue gases, this High Temperature Line Vac can resist back pressure from long pipe lengths with numerous bends. The Heavy Duty Line Vac shown on page 178 moves the highest volumes and resists wear.

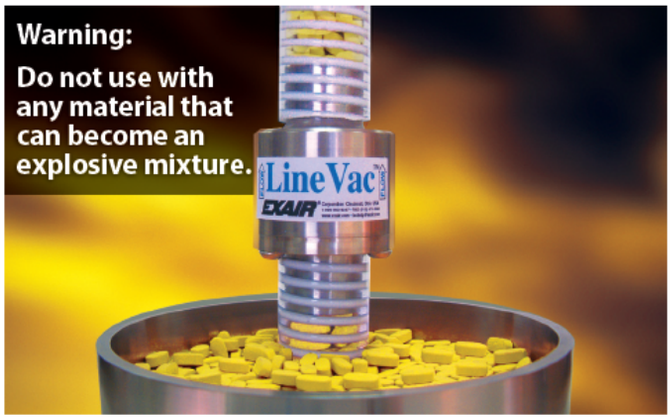

A 316 Stainless Steel Line Vac is used by a pharmaceutical company to convey pills and tablets to a packaging station.



High Temperature Line Vacs can resist temperatures to 900°F (482°C) and are available from stock in hose or threaded models.

For assistance with product selection, contact an Application Engineer at 1-800-903-9247.

EXAIR_Cat36_25_FROMINDESIGN.indb 171 12/20/24 3:47 PM

Line Vac

Clear PVC Hose

EXAIR stocks 3/8" (10mm), 1/2" (13mm), 3/4" (19mm), 1" (25mm), 1-1/4" (32mm), 1-1/2" (38mm), 2" (51mm), 2-1/2" (64mm) and 3" (76mm) I.D. PVC hose in lengths up to 50' (15.2m). Ideal for conveying applications, the hose is very flexible and has a smooth internal bore that eliminates material build up. The reinforced, heavy wall of this clear hose provides visual confirmation that the material is moving when air is supplied to the Line Vac. Temperature rating is -4 to 150°F (-20 to 66°C).



Special Line Vacs

EXAIR manufactures special Line Vacs suited to specific application requirements. Configurations and materials can be made to facilitate your requirements.

If you have special requirements, please contact an Application Engineer to discuss the application.

The Line Vac can be engineered to retrofit existing machinery. The Line Vac *(shown below)* has special flanges that permit direct mounting to a machine used in the manufacturing of silicon wafers for the semiconductor industry.

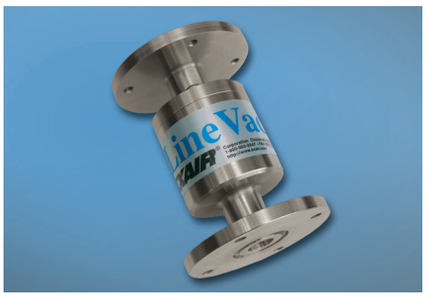

A special 3/4" (19mm) Stainless Steel Line Vac evacuates fumes from a silicon wafer etching operation.

This flanged Line Vac is used to remove acidic vapors resulting from surface etching of a silicon wafer. Ordinarily, EXAIR's Stainless Steel Air Amplifier would have been used since it moves much higher volumes of air. In this case, the Line Vac was the better choice since the exhaust piping was long with many bends that would have created high back pressure. The directed nozzles of the Line Vac overcame this downstream resistance.



This special 1-1/2" (38mm) Line Vac is made of PVDF to withstand a chloride washdown.

The special flanged Line Vac *(shown above)* is made of PVDF, a plastic that has high chemical resistance. In this case, the 1-1/2" (38mm) Line Vac was regularly exposed to a chloride wash, a chemical that would corrode stainless steel. QF flanges were provided on each end to allow easy removal of the conveying hoses for cleaning purposes.



This special Line Vac is used to fill small packets.

Filling small packets with fine powders or granulated materials such as salt or barite is done using small tubes that are gravity fed from a hopper. This works well when the material is dry, however, moist materials would often pack the tube, blocking the flow. The special funnel shaped Line Vac *(shown bottom center)* created a suction on the existing tube to permit continuous product flow.

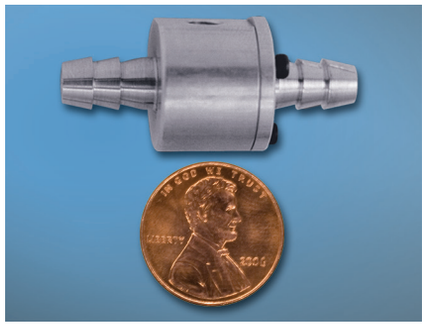

A special miniature Line Vac used to vacuum microscopic debris measures the same size as a penny!

The special miniature Line Vac with barb fittings *(shown above)* was designed for a manufacturer of integrated circuit chips. It was used to remove microscopic debris during the chip making process. This small Line Vac generated high vacuum and was the perfect configuration for the confined working space. It has also been used by another manufacturer to vacuum liquid and chips from small drilled holes.

EXAIR_Cat36_25_FROMINDESIGN.indb 172 12/20/24 3:47 PM

Refilling A Vibratory Bowl

The Problem: A manufacturer of metal products deburrs aluminum sleeves in a vibratory bowl filled with abrasive media. As the parts complete the deburring cycle, they are discharged to a screened bed. The abrasive media drops through the bed and the finished parts roll into a box. Refilling the bowl was a back breaking operation that required repetitious lifting of heavy buckets.

The Solution: A **Model 6064 2" (51mm) Stainless Steel Line Vac** was installed on the vibratory bowl. In minutes, the media was conveyed back up to the bowl through a hose, without the heavy lifting.

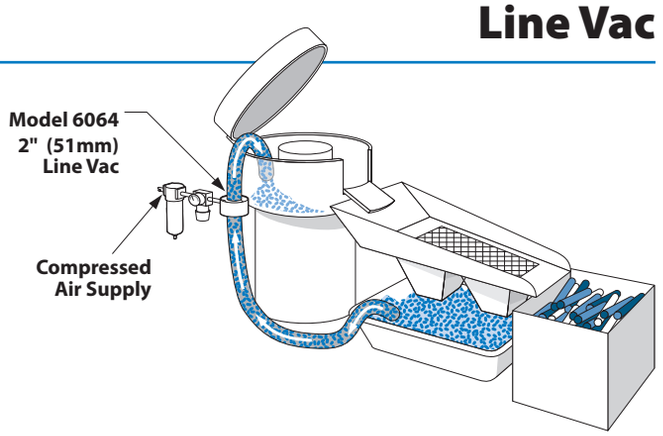

Comment: The ability to convey the abrasive media with air was the key to success. The Line Vac is easy to use, and in this case, was the best choice since it will hold up better to the abrasive media conveyed through it.

Conveying Plastic Pellets

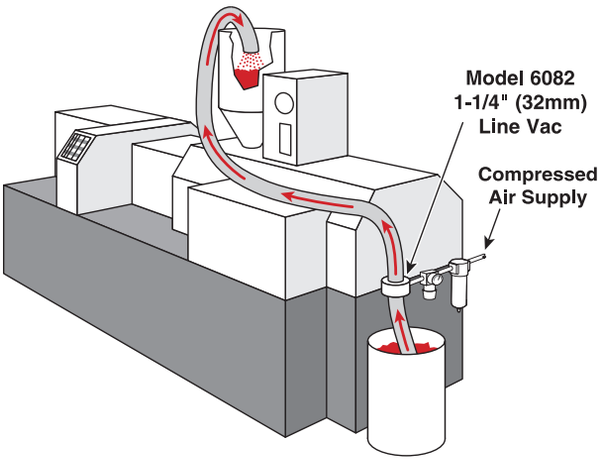

The Problem: Injection molding machines transform plastic pellets into various plastic products. The pellets are gravity fed from a hopper on top of the machine. The "bucket and ladder" method of replenishing the hopper was inefficient and expensive.

The Solution: A **Model 6982 1-1/4" (32mm) Line Vac Kit** was used to convey the pellets up to the hopper. The mounting bracket included with the kit was used to secure the Line Vac to the machine. A filter assured no contamination of the plastic material and a regulator controlled the plastic flow rate.

Comment: Unlike mechanical transfer systems that break down or wear out, the **Line Vac has no moving parts.** This low cost method of conveying also gives precise control of material flow into the hopper.

Line Vac for Matrix Removal from Labeling Application

The Problem: A manufacturer applies labels to their products. After they have been applied, there is a waste stream that is referred to as "the matrix". The matrix is the release liner that labels are affixed to in bulk format prior to being used. The normal method for taking up this waste stream was to use a winder. However, after some amount of time, the winder inevitably becomes filled. Once full, the line is stopped and the winder is manually emptied. They needed a better way to dispose of the matrix.

The Solution: The **Line Vac** presents a unique advantage in that it can pull the matrix from the machine and convey it out to a waste receptacle. This requires no winder, no stopping the line and no emptying. This solution freed up personnel for other tasks and increased production. The compact design and powerful operation of the Line Vac allowed it to be placed close to the generation of scrap, trim, or waste. Its powerful conveying capacity allowed it to transport the material to a remote and central location.

Comment: This application illustrates the versatility of the Line Vac product line. Commonly used for hopper loading products in the plastics industry, a Line Vac is also a strong performer for applications like waste/trim removal, assembly parts conveyance, blasting media recovery, gas sampling and chip removal. Its large variety of materials and sizes makes it well suited for industrial, pharmaceutical, laboratory, high temperature and corrosive environments. No moving parts or electricity assures maintenance free operation.



1" (25mm) Line Vacs remove and discard a label matrix.

EXAIR_Cat36_25_FROMINDESIGN.indb 173 12/20/24 3:47 PM

Line Vac

Line Vac Only Models					
Inlet/Outlet Diameter	Aluminum Line Vac Model	Type 303 Stainless Steel Line Vac Model	Type 316 Stainless Steel Line Vac Model	High Temperature Type 303 Stainless Steel Line Vac Model	High Temperature Type 316 Stainless Steel Line Vac Model
3/8" (10mm)	6078	6058	6058-316	N/A	N/A
1/2" (13mm)	6079	6059	6059-316	N/A	N/A
3/4" (19mm)	6080	6060	6060-316	HT6060	HT6060-316
1" (25mm)	6081	6061	6061-316	HT6061	HT6061-316
1-1/4" (32mm)	6082	6062	6062-316	HT6062	HT6062-316
1-1/2" (38mm)	6083	6063	6063-316	HT6063	HT6063-316
2" (51mm)	6084	6064	6064-316	HT6064	HT6064-316
2-1/2" (64mm)	6085	6065	6065-316	HT6065	HT6065-316
3" (76mm)	6086	6066	6066-316	HT6066	HT6066-316
4" (102mm)	6087	6067	N/A	N/A	N/A
5" (127mm)	6088	N/A	N/A	N/A	N/A

Line Vac Kit Models					
Line Vac Kits - include the Line Vac, mounting bracket, filter separator and pressure regulator (with coupler).					
Inlet/Outlet Diameter	Aluminum Line Vac Kit Model	Type 303 Stainless Steel Line Vac Kit Model	Type 316 Stainless Steel Line Vac Kit Model	High Temperature Type 303 Stainless Steel Line Vac Kit Model	High Temperature Type 316 Stainless Steel Line Vac Kit Model
3/8" (10mm)	6978	6958	6958-316	N/A	N/A
1/2" (13mm)	6979	6959	6959-316	N/A	N/A
3/4" (19mm)	6980	6960	6960-316	HT6960	HT6960-316
1" (25mm)	6981	6961	6961-316	HT6961	HT6961-316
1-1/4" (32mm)	6982	6962	6962-316	HT6962	HT6962-316
1-1/2" (38mm)	6983	6963	6963-316	HT6963	HT6963-316
2" (51mm)	6984	6964	6964-316	HT6964	HT6964-316
2-1/2" (64mm)	6985	6965	6965-316	HT6965	HT6965-316
3" (76mm)	6986	6966	6966-316	HT6966	HT6966-316
4" (102mm)	6987	6967	N/A	N/A	N/A
5" (127mm)	6988	N/A	N/A	N/A	N/A

Accessories	
Model #	Description
6994	Mounting Bracket for 3/8" (10mm) and 1/2" (13mm) Line Vac Units
6995	Mounting Bracket for 3/4" (19mm) and 1" (25mm) Line Vac Units
6996	Mounting Bracket for 1-1/4" (32mm) and 1-1/2" (38mm) Line Vac Units
6997	Mounting Bracket for 2" (51mm) and 2-1/2" (64mm) Line Vac Units
6998	Mounting Bracket for 3" (76mm) and 4" (102mm) Line Vac Units
6999	Mounting Bracket for 5" (127mm) Line Vac Unit
9001	Auto Drain Filter Separator, 3/8 NPT, 65 SCFM (1,841 SLPM)
9032	Auto Drain Filter Separator, 1/2 NPT, 90 SCFM (2,549 SLPM)
9002	Auto Drain Filter Separator, 3/4 NPT, 220 SCFM (6,230 SLPM)
9005	Oil Removal Filter, 3/8 NPT, 15-37 SCFM (425-1,048 SLPM)
9006	Oil Removal Filter, 3/4 NPT, 50-150 SCFM (1,416-4,248 SLPM)
9008	Pressure Regulator with Gauge, 1/4 NPT, 50 SCFM (1,416 SLPM)
9033	Pressure Regulator with Gauge, 1/2 NPT, 100 SCFM (2,832 SLPM)
9009	Pressure Regulator with Gauge, 3/4 NPT, 220 SCFM (6,230 SLPM)
Hose is available in 10', 20', 30', 40' and 50' lengths. Select the hose model number (diameter) and indicate the length with a dash. Example: A Model 6931-20 is 1" ID Hose × 20' long.	
6928-	Hose 3/8" ID
6929-	Hose 1/2" ID
6930-	Hose 3/4" ID
6931-	Hose 1" ID
6932-	Hose 1-1/4" ID
6933-	Hose 1-1/2" ID
6934-	Hose 2" ID
6935-	Hose 2-1/2" ID
6936-	Hose 3" ID

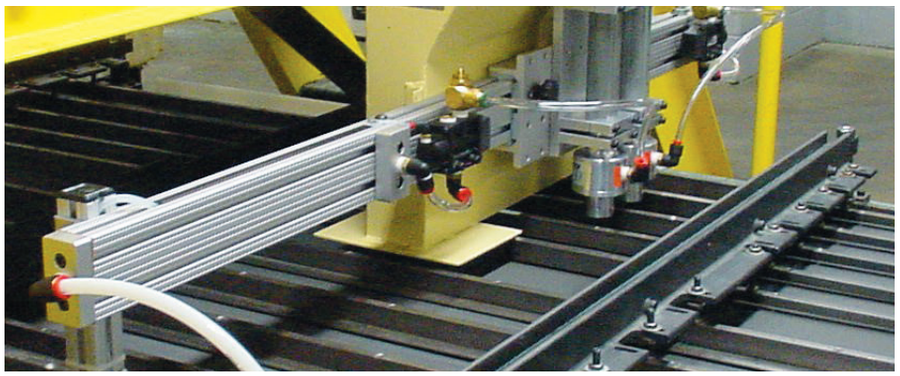

(2) Model 6083 1-1/2" (38mm) Line Vacs convey rejected metal caps from a fluorescent lamp operation to a scrap bin.

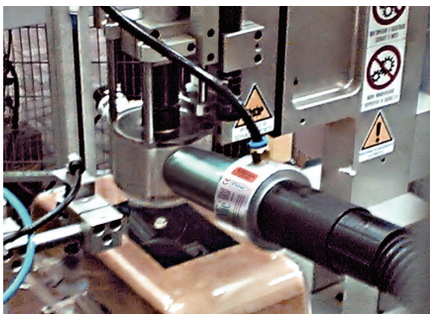

1-1/4" (32mm) Line Vac is mounted on a burr removal tool to suction the plastic shavings and transport them to a waste container.

EXAIR_Cat36_25_FROMINDESIGN.indb 174 12/20/24 3:47 PM

An INTELLIGENT COMPRESSED AIR® Product

Threaded Line Vac™

Low cost conveyor uses ordinary pipe!

Ideal for long distance conveying!



Plastic color concentrate pellets are added to a plastic extrusion process.

What Is The Threaded Line Vac?

A fast, low cost way to convey:

- Plastic pellets
- Scrap trim
- Textiles
- Bulk solids
- Chips
- Paper
- Small parts
- Shavings
- Sawdust
- Granules

EXAIR's Threaded Line Vac air operated conveyors convert ordinary pipe into a powerful conveying system for parts, scrap, trim and other bulk materials. The Threaded Line Vac attaches easily to plumbing pipe couplers, making it easy to build a complete system using ordinary pipe and fittings available from any home center, hardware store or plumbers supply. Performance is the same as our standard Line Vac shown on page 169.

Threaded Line Vac conveyors are ideal for conveying large volumes of material over long distances. They eject a small amount of compressed air to produce a vacuum on one end with high output flows on the other. Response is instantaneous. Regulating the compressed air pressure provides infinite control of the conveying rate. Models from 3/8 NPT to 3 NPT are available in aluminum and stainless steel, which are suited to a wide variety of conveying applications. An optional mounting bracket permits easy mounting. No moving parts or electricity assures maintenance free operation.



A drawer slide manufacturer conveys ball bearings with the Model 141125 1-1/4 NPT Stainless Steel Threaded Line Vac to an assembly station.

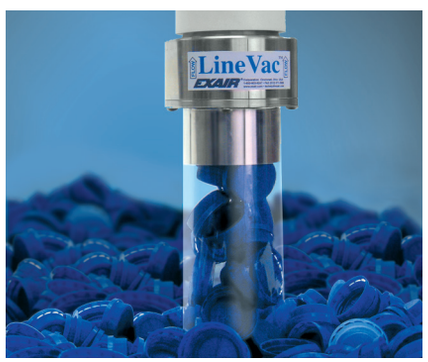

A special Threaded Line Vac has a smooth diameter for hose on the intake and threads on the exhaust that attach to PVC pipe.

Applications

- Hopper loading
- Fiber tensioning
- Material conveying
- Waste/trim removal
- Chip removal
- Part transfer
- Filling operations

Advantages

- Compact
- Quiet
- No moving parts
- Fits standard pipe
- Aluminum or stainless steel
- Available from stock
- High throughput capability

EXAIR_Cat36_25_FROMINDESIGN.indb 175 12/20/24 3:47 PM

Threaded Line Vac

Dimensions

DOWNLOAD drawings at EXAIR.com

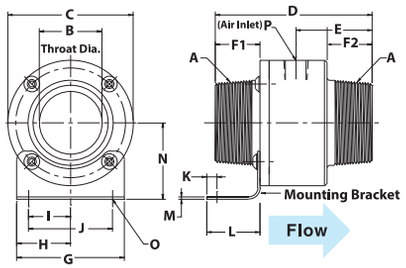

Threaded Line Vac Performance

80 PSIG (5.5 BAR)	Air Consumption		Vacuum	
Model	SCFM	SLPM	"H_20	kPa
140038, 141038, 141038-316	5.60	158	-120	-29.9
140050, 141050, 141050-316	7	198	-100	-24.9
140075, 141075, 141075-316, HT141075, HT141075-316	10.70	303	-72	-18
140100, 141100, 141100-316, HT141100, HT141100-316	14.70	416	-42	-11
140125, 141125, 141125-316, HT141125, HT141125-316	25.90	733	-42	-11
140150, 141150, 141150-316, HT141150, HT141150-316	33	934	-36.8	-9
140200, 141200, 141200-316, HT141200, HT141200-316	45	1,274	-28.5	-7
140250, 141250, 141250-316, HT141250, HT141250-316	58.50	1,656	-23.5	-6
140300, 141300, 141300-316, HT141300, HT141300-316	68.50	1,939	-14.7	-4

Threaded Line Vac Dimensions

Line Vac Models			A Pipe Size		B	C	D	E	F1	F2	G	H	I	J	K	L	M	N	O	P
Alum.	303 St. St.	316 St. St.																		
140038	141038	141038-316	3/8 NPT	in	0.19	1.00	2.83	1.13	1.23	0.72	1.25	0.63	0.41	0.82	0.17	1.13	0.06	1.07	0.18	1/8 NPT
				mm	5	25	72	29	31	18	32	16	10	21	4	29	2	27	5	
140050	141050	141050-316	1/2 NPT	in	0.31	1.25	3.38	1.38	1.31	0.88	1.25	0.63	0.34	0.68	0.13	1.00	0.06	1.18	0.18	1/8 NPT
				mm	8	32	86	35	33	22	32	16	9	17	3	25	2	30	5	
140075	141075	141075-316	3/4 NPT	in	0.50	1.88	3.88	1.88	1	1	2	1	0.76	1.52	0.25	1.38	0.06	1.44	0.20	1/4 NPT
				mm	13	48	99	48	25	25	51	25	19	39	6	35	2	37	5	
140100	141100	141100-316	1 NPT	in	0.75	2.13	4.25	2.06	1.19	1.19	2	1	0.65	1.30	0.25	1.32	0.06	1.56	0.20	1/4 NPT
				mm	19	54	108	52	30	30	51	25	17	33	6	34	2	40	5	
140125	141125	141125-316	1-1/4 NPT	in	1	2.38	4.63	2.25	1.38	1.38	2.50	1.25	1	2	0.31	1.61	0.06	1.68	0.28	1/4 NPT
				mm	25	60	118	57	35	35	64	32	25	51	8	41	2	43	7	
140150	141150	141150-316	1-1/2 NPT	in	1.25	2.75	4.63	2.25	1.38	1.38	2.50	1.25	0.86	1.73	0.25	1.44	0.06	1.88	0.28	3/8 NPT
				mm	32	70	118	57	35	35	64	32	22	44	6	37	2	48	7	
140200	141200	141200-316	2 NPT	in	1.75	3.25	4.63	2.25	1.38	1.38	3	1.50	1.17	2.34	0.28	1.48	0.06	2.13	0.28	3/8 NPT
				mm	44	83	118	57	35	35	76	38	30	59	7	38	2	54	7	
140250	141250	141250-316	2-1/2 NPT	in	2.25	3.75	5.38	2.56	1.81	1.69	3	1.50	1	2	0.31	1.44	0.06	2.38	0.28	3/8 NPT
				mm	57	95	137	65	46	43	76	38	25	51	8	37	2	60	7	
140300	141300	141300-316	3 NPT	in	2.75	4.25	5.67	2.75	1.81	1.75	3.25	1.63	1.20	2.41	0.41	1.44	0.06	2.63	0.28	1/2 NPT
				mm	70	108	144	70	46	45	83	41	31	61	10	37	2	67	7	

Threaded Line Vac Dimensions

Line Vac Models			A Pipe Size		B	C	D	E	F1	F2	G	H	I	J	K	L	M	N	O	P
Heavy Duty	High Temp 303 SS	High Temp 316 SS																		
151075	HT141075	HT141075-316	3/4 NPT	in	0.50	1.88	3.88	1.88	1	1	2	1	0.76	1.52	0.25	1.38	0.06	1.44	0.20	1/4 NPT
				mm	13	48	99	48	25	25	51	25	19	39	6	35	2	37	5	
151100	HT141100	HT141100-316	1 NPT	in	0.75	2.13	4.25	2.06	1.19	1.19	2	1	0.65	1.30	0.25	1.32	0.06	1.56	0.20	1/4 NPT
				mm	19	54	108	52	30	30	51	25	17	33	6	34	2	40	5	
151125	HT141125	HT141125-316	1-1/4 NPT	in	1	2.38	4.63	2.25	1.38	1.38	2.50	1.25	1	2	0.31	1.61	0.06	1.68	0.28	1/4 NPT
				mm	25	60	118	57	35	35	64	32	25	51	8	41	2	43	7	
151150	HT141150	HT141150-316	1-1/2 NPT	in	1.25	2.75	4.63	2.25	1.38	1.38	2.50	1.25	0.86	1.73	0.25	1.44	0.06	1.88	0.28	3/8 NPT
				mm	32	70	118	57	35	35	64	32	22	44	6	37	2	48	7	
151200	HT141200	HT141200-316	2 NPT	in	1.75	3.25	4.63	2.25	1.38	1.38	3	1.50	1.17	2.34	0.28	1.48	0.06	2.13	0.28	3/8 NPT
				mm	44	83	118	57	35	35	76	38	30	59	7	38	2	54	7	
151250	HT141250	HT141250-316	2-1/2 NPT	in	2.25	3.75	5.38	2.56	1.81	1.69	3	1.50	1	2	0.31	1.44	0.06	2.38	0.28	3/8 NPT
				mm	57	95	137	65	46	43	76	38	25	51	8	37	2	60	7	
151300	HT141300	HT141300-316	3 NPT	in	2.75	4.25	5.67	2.75	1.81	1.75	3.25	1.63	1.20	2.41	0.41	1.44	0.06	2.63	0.28	1/2 NPT
				mm	70	108	144	70	46	45	83	41	31	61	10	37	2	67	7	

Threaded Line Vac Models

Threaded Line Vac Only

Inlet/Outlet Thread Size	Aluminum Threaded Line Vac Only Model	Type 303 Stainless Steel Threaded Line Vac Only Model	High Temperature Type 303 Stainless Steel Threaded Line Vac Only Model	Type 316 Stainless Steel Threaded Line Vac Only Model	High Temperature Type 316 Stainless Steel Threaded Line Vac Only Model
3/8 NPT	140038	141038	N/A	141038-316	N/A
1/2 NPT	140050	141050	N/A	141050-316	N/A
3/4 NPT	140075	141075	HT141075	141075-316	HT141075-316
1 NPT	140100	141100	HT141100	141100-316	HT141100-316
1-1/4 NPT	140125	141125	HT141125	141125-316	HT141125-316
1-1/2 NPT	140150	141150	HT141150	141150-316	HT141150-316
2 NPT	140200	141200	HT141200	141200-316	HT141200-316
2-1/2 NPT	140250	141250	HT141250	141250-316	HT141250-316
3 NPT	140300	141300	HT141300	141300-316	HT141300-316

Threaded Line Vac Kit Models

Threaded Line Vac Kits - include the Line Vac, mounting bracket, filter separator and pressure regulator (with coupler).

Inlet/Outlet Thread Size	Aluminum Threaded Line Vac Kit Model	Type 303 Stainless Steel Threaded Line Vac Kit Model	High Temperature Type 303 Stainless Steel Threaded Line Vac Kit Model	Type 316 Stainless Steel Threaded Line Vac Kit Model	High Temperature Type 316 Stainless Steel Threaded Line Vac Kit Model
3/8 NPT	142038	143038	N/A	143038-316	N/A
1/2 NPT	142050	143050	N/A	143050-316	N/A
3/4 NPT	142075	143075	HT143075	143075-316	HT143075-316
1 NPT	142100	143100	HT143100	143100-316	HT143100-316
1-1/4 NPT	142125	143125	HT143125	143125-316	HT143125-316
1-1/2 NPT	142150	143150	HT143150	143150-316	HT143150-316
2 NPT	142200	143200	HT143200	143200-316	HT143200-316
2-1/2 NPT	142250	143250	HT143250	143250-316	HT143250-316
3 NPT	142300	143300	HT143300	143300-316	HT143300-316

Accessories

Model #	Description
6994	Mounting Bracket for 3/8 NPT and 1/2 NPT Threaded Line Vac Units
6995	Mounting Bracket for 3/4 NPT and 1 NPT Threaded Line Vac Units
6996	Mounting Bracket for 1-1/4 NPT and 1-1/2 NPT Threaded Line Vac Units
6997	Mounting Bracket for 2 NPT and 2-1/2 NPT Threaded Line Vac Units
6998	Mounting Bracket for 3 NPT Line Vac Units
9001	Auto Drain Filter Separator, 3/8 NPT, 65 SCFM (1,841 SLPM)
9005	Oil Removal Filter, 3/8 NPT, 15-37 SCFM (425-1,048 SLPM)
9008	Pressure Regulator with Gauge, 1/4 NPT, 50 SCFM (1,416 SLPM)



Threaded Line Vac Kits include the Threaded Line Vac, mounting bracket, filter separator and pressure regulator (with coupler).

EXAIR_Cat36_25_FROMINDESIGN.indb 177 12/20/24 3:47 PM

Heavy Duty Line Vac™

Our most powerful Line Vac moves high volumes of material and resists wear!





What Is The Heavy Duty Line Vac?

The Heavy Duty Line Vac is EXAIR's most powerful conveyor. The appearance is similar to the standard Line Vac but performance has been boosted dramatically. The Heavy Duty Line Vac has been engineered to convey materials over longer vertical and horizontal distances. The hardened alloy construction helps prevent premature wear that could occur with ordinary aluminum or stainless steel Line Vacs.

Why The Heavy Duty Line Vac?

Many applications require that materials be transported over longer distances. The Heavy Duty Line Vac can move more material over longer lengths. They have been designed for rugged, industrial applications.

The table below gives a quick comparison of our Light Duty Line Vac, standard Line Vac, and the Heavy Duty Line Vac models. For comparison, the test shows the 2" (51mm) model of each style conveying the same material over various lengths. Heavy Duty Line Vac conveys more material in less time.

	Rock Salt Conveying Rate Comparison	
	100 Feet (30.5m)	200 Feet (61m)
Model 130200 2" (51mm) Light Duty Line Vac	166 lbs/hr. (75.3 kg/hr.)	N/A
Model 6084 2" (51mm) Line Vac	334 lbs/hr. (151.5 kg/hr.)	85 lbs/hr. (38.6 kg/hr.)
Model 150200 2" (51mm) Heavy Duty Line Vac	524 lbs/hr. (237.7 kg/hr.)	200 lbs/hr. (90.7 kg/hr.)

Horizontal conveying tested at 80 PSIG (5.5 BAR)



The hardened alloy construction of the Heavy Duty Threaded Line Vac resists wear when conveying abrasive steel shot.

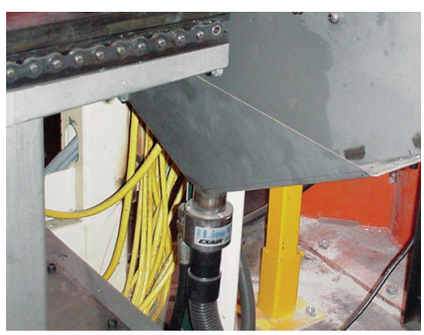

Metal parts are conveyed with the Model 150200 2" (51mm) Heavy Duty Line Vac as they drop off the edge of the conveyor.

Applications

- Hopper loading
- Fiber tensioning
- Material conveying
- Waste/trim removal
- Chip removal
- Part transfer
- Filling operations

Advantages

- Hardened alloy construction
- Highest throughput capability
- Compact
- Quiet
- No moving parts
- Fits standard hose, tube and pipe
- Available from stock

EXAIR_Cat36_25_FROMINDESIGN.indb 178 12/20/24 3:47 PM



Heavy Duty Threaded Line Vac

EXAIR's Heavy Duty Threaded Line Vac air operated conveyors convert ordinary pipe into a powerful conveying system for parts, scrap, trim and other bulk materials. The engineered Heavy Duty Threaded Line Vac attaches easily to ordinary NPT pipe and fittings available from any home center, hardware store or plumbers supply. With its hardened alloy construction, the Heavy Duty Threaded Line Vac withstands premature wear which could occur with aluminum and stainless steel.

Heavy Duty Line Vac Performance

80 PSIG (5.5 BAR)	Size		Air Consumption		Vacuum	
Model	in	mm	SCFM	SLPM	"H_20	kPa
150075, 151075	0.75	19	26	736	-144	-36
150100, 151100	1	25	35	991	-105	-26
150125, 151125	1.25	32	49	1,388	-83	-21
150150, 151150	1.50	38	55	1,557	-60	-15
150200, 151200	2	51	75	2,124	-42	-10
150250, 151250	2.50	64	90	2,548	-28	-7
150300, 151300	3	76	108	3,058	-20	-5

DOWNLOAD drawings at EXAIR.com

Dimensions

For Heavy Duty Line Vac Dimensions, see:

Line Vac.....pg 170
Threaded Line Vac .....pg 176

Heavy Duty Line Vac Models

Heavy Duty Line Vac Only
Heavy Duty Line Vac Kits - include the Line Vac, mounting bracket, filter separator and pressure regulator (with coupler).

Inlet/Outlet Diameter	Heavy Duty Line Vac Only Model	Heavy Duty Line Vac Kit Model	Inlet/Outlet Thread Size	Heavy Duty Threaded Line Vac Only Model	Heavy Duty Threaded Line Vac Kit Model
3/4" (19mm)	150075	152075	3/4 NPT	151075	153075
1" (25mm)	150100	152100	1 NPT	151100	153100
1-1/4" (32mm)	150125	152125	1-1/4 NPT	151125	153125
1-1/2" (38mm)	150150	152150	1-1/2 NPT	151150	153150
2" (51mm)	150200	152200	2 NPT	151200	153200
2-1/2" (64mm)	150250	152250	2-1/2 NPT	151250	153250
3" (76mm)	150300	152300	3 NPT	151300	153300

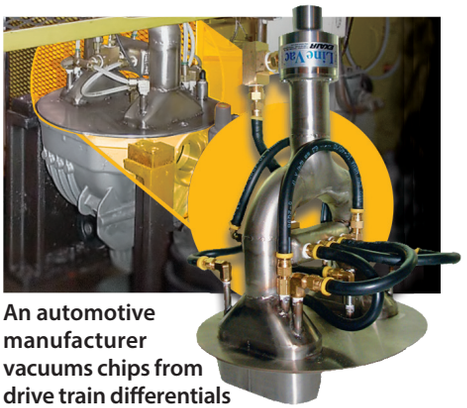

An automotive manufacturer vacuums chips from drive train differentials with a Model 150200 2" (51mm) Heavy Duty Line Vac.



Heavy Duty Line Vac Kits include a Heavy Duty Line Vac, mounting bracket, filter separator and pressure regulator (with coupler).

Accessories

Model #	Description
6995	Mounting Bracket for 3/4" (19mm) and 1" (25mm) Line Vac Units
6996	Mounting Bracket for 1-1/4" (32mm) and 1-1/2" (38mm) Line Vac Units
6997	Mounting Bracket for 2" (51mm) and 2-1/2" (64mm) Line Vac Units
6998	Mounting Bracket for 3" (76mm) Line Vac Units
9001	Auto Drain Filter Separator, 3/8 NPT, 65 SCFM (1,841 SLPM)
9032	Auto Drain Filter Separator, 1/2 NPT, 90 SCFM (2,549 SLPM)
9002	Auto Drain Filter Separator, 3/4 NPT, 220 SCFM (6,230 SLPM)
9005	Oil Removal Filter, 3/8 NPT, 15-37 SCFM (425-1,048 SLPM)
9006	Oil Removal Filter, 3/4 NPT, 50-150 SCFM (1,416-4,248 SLPM)
9008	Pressure Regulator with Gauge, 1/4 NPT, 50 SCFM (1,416 SLPM)
9033	Pressure Regulator with Gauge, 1/2 NPT, 100 SCFM (2,832 SLPM)
9009	Pressure Regulator with Gauge, 3/4 NPT, 220 SCFM (6,230 SLPM)

Hose is available in 10', 20', 30', 40' and 50' lengths. Select the hose model number (diameter) and indicate the length with a dash.
Example: A Model 6931-20 is 1" ID Hose x 20' long.

6930-	Hose 3/4" ID
6931-	Hose 1" ID
6932-	Hose 1-1/4" ID
6933-	Hose 1-1/2" ID
6934-	Hose 2" ID
6935-	Hose 2-1/2" ID
6936-	Hose 3" ID

If you have special requirements, please contact an Application Engineer to discuss the application.

EXAIR_Cat36_25_FROMINDESIGN.indb 179 12/20/24 3:47 PM

Sanitary Flange Line Vac™

Convey materials, parts, waste - with easy disassembly and cleanup!





What Is The Sanitary Flange Line Vac?

EXAIR's Sanitary Flange Line Vac is the best way to convey materials in systems which require frequent or mandatory cleaning. The Sanitary Flange Line Vac fits within your current sanitary flange piping system and converts it into a conveyor for waste, parts and bulk materials.

Why The Sanitary Flange Line Vac?

When your piping system requires sanitary flanges, which make it easy to dismantle and clean its components, the Sanitary Flange Line Vac will suit your needs. They are made from Type 316SS to provide superior corrosion resistance and cleanliness. These flanged Line Vacs limit entrapment areas where bacteria can grow and the clamp style sanitary flanges are compatible with ISO 2852. Sanitary Flange Line Vacs are designed with the same performance characteristics of EXAIR's standard and Threaded Line Vacs which makes them a versatile solution for your conveying needs. Conveying rates are easy to control by regulating the compressed air supply pressure.

The Sanitary Flange Line Vacs are available from stock in four common flange sizes, 1-1/2" (38mm), 2" (51mm), 2-1/2" (64mm) and 3" (76mm). All metal parts are made from Type 316SS. No moving parts or electricity assures maintenance free operation.

Sanitary Flange Line Vac Performance

80 PSIG (5.5 BAR)	Size		Air Consumption		Vacuum	
Model	in	mm	SCFM	SLPM	"H_2O	kPa
161150-316	1.5	38	33	934	-36.8	-9
161200-316	2	51	45	1,274	-28.5	-7
161250-316	2.5	64	58.5	1,657	-23.5	-6
161300-316	3	76	68.5	1,939	-14.7	-4

Horizontal conveying tested at 80 PSIG (5.5 BAR)

Applications

- Material conveying
- Part transfer
- Waste/trim removal
- Hopper loading
- Filling operations
- Chip removal
- Fiber tensioning

Advantages

- ISO 2852 compatible
- Type 316SS
- Fits standard sanitary flanges
- Four sizes available from stock
- No moving parts
- Compact
- High throughput capability
- Quiet

EXAIR_Cat36_25_FROMINDESIGN.indb 180 12/20/24 3:48 PM

Dimensions

DOWNLOAD drawings at EXAIR.com

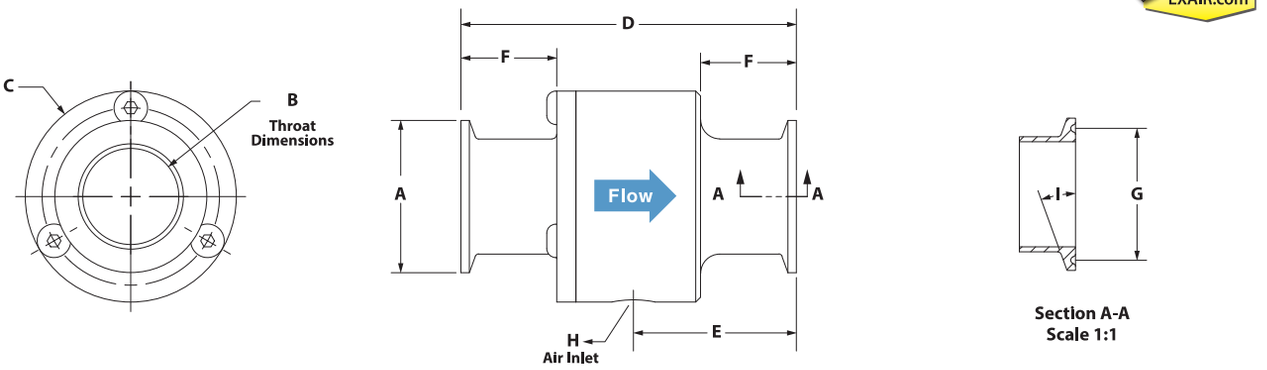

Sanitary Flange Line Vac Dimensions										
Sanitary Flange Line Vac Models		A	B	C	D	E	F	G	H (air inlet)	I
161150-316	in	2	1.25	2.75	4.38	2.13	1.25	1.69	3/8 NPT	20°
	mm	51	32	70	111	54	32	43		
161200-316	in	2.52	1.75	3.25	4.38	2.13	1.25	2.22	3/8 NPT	20°
	mm	64	44	83	111	54	32	56		
161250-316	in	3.05	2.25	3.75	4.38	2.13	1.25	2.78	3/8 NPT	20°
	mm	77	57	95	111	54	32	71		
161300-316	in	3.58	2.75	4.25	5.63	2.75	1.75	3.28	1/2 NPT	21.3°
	mm	91	70	108	143	70	44	83		

Sanitary Flange Line Vac Models

Sanitary Flange Line Vac Only

Sanitary Flange Line Vac Kits - include the Line Vac, mounting bracket, filter separator and pressure regulator (with coupler).

Inlet/Outlet Diameter	Sanitary Flange Line Vac Only Model	Sanitary Flange Line Vac Kit Model
1-1/2" (38mm)	161150-316	163150-316
2" (51mm)	161200-316	163200-316
2-1/2" (64mm)	161250-316	163250-316
3" (76mm)	161300-316	163300-316

Accessories

Model #	Description
9001	Auto Drain Filter Separator, 3/8 NPT, 65 SCFM (1,841 SLPM)
9002	Auto Drain Filter Separator, 3/4 NPT, 220 SCFM (6,230 SLPM)
9005	Oil Removal Filter, 3/8 NPT, 15-37 SCFM (425-1,048 SLPM)
9006	Oil Removal Filter, 3/4 NPT, 50-150 SCFM (1,416-4,248 SLPM)
9008	Pressure Regulator with Gauge, 1/4 NPT, 50 SCFM (1,416 SLPM)
9009	Pressure Regulator with Gauge, 3/4 NPT, 220 SCFM (6,230 SLPM)

Line Vac Drum Cover

Line Vac Drum Cover

EXAIR's fine mesh non-woven Drum Cover is built to fit over the top of 55 or 30 gallon drums. The breathable material allows the air from a Line Vac air operated conveyor to circulate, whether moving material in or out of the drum. The cover prevents contamination of your material and keeps material from escaping the drum, which keeps your work environment cleaner and safer. Since it is fabricated to fit 55 or 30 gallon drums, it is the simplest of solutions when needing a containment vessel for your transferred scrap, trim, waste, parts, chips or pellets. It is suitable for Line Vac conveyance hoses from 3/4" through 3" inside diameters and comes complete with hose clamps and a durable spring buckle strap for quick and easy installation.



If you have special requirements, please contact an Application Engineer to discuss the application.

Line Vac Drum Cover	
Model #	Description
6850	Drum Cover

EXAIR_Cat36_25_FROMINDESIGN.indb 181 12/20/24 3:48 PM

Light Duty Line Vac™

An effective way to convey small volumes of material over short distances!



What Is The Light Duty Line Vac?

EXAIR's Light Duty Line Vac is the ideal way to convey small volumes of materials over short distances. Like the Line Vac shown on page 169, the Light Duty Line Vac converts an ordinary hose or tube into a conveyor for scrap, trim and bulk materials.

Why The Light Duty Line Vac?

When lower throughputs at short distances are desired, the Light Duty Line Vac is a good choice. This simplified design utilizes a two-part threaded construction to provide effective conveying at a lower cost. Air consumption is reduced to a volume appropriate for moving small volumes of material at short distances. Conveying rates are easy to control by regulating the compressed air supply pressure.

The Light Duty Line Vac features inlet and outlet diameters common to hose and tube sizes. Eight sizes for diameters from 3/4" to 6" (19 to 152mm) are available. Standard construction is aluminum. (For corrosion resistant stainless steel models that are suitable for high temperature and food service, please see Line Vac models on page 174.) No moving parts or electricity assures maintenance free operation. (If higher conveying rates or mounting brackets are desired, see the Line Vac models on page 174.)



The low cost Model 130200 2" (51mm) Light Duty Line Vac conveys fibers to to fill pillows, stuffed animals, diapers, etc.

Applications

- Hopper loading
- Fiber tensioning
- Material conveying
- Waste/trim removal
- Chip removal
- Part transfer
- Filling operations

Advantages

- Compact
- Quiet
- No moving parts
- Fits standard hose or tube
- Aluminum
- Eight sizes
- Moderate throughput capability

Built to Last 5 yr. WARRANTY
See our Terms & Conditions



A Model 130125 1-1/4" (32mm) Light Duty Line Vac can fill or empty the packing peanuts from shipping cartons.

EXAIR_Cat36_25_FROMINDESIGN.indb 182 12/20/24 3:48 PM

Light Duty Line Vac Dimensions								
Model #		A	B	C	D	E	F	G
130075	in	0.75	0.50	1.88	4.53	2.31	1.06	1/4 NPT
	mm	19	13	48	115	59	27	
130100	in	1	0.75	2.13	4.53	2.41	1.06	1/4 NPT
	mm	25	19	54	115	61	27	
130125	in	1.25	1	2.38	4.53	2.41	1.06	1/4 NPT
	mm	32	25	60	115	61	27	
130150	in	1.50	1.25	2.75	4.63	2.41	1.06	3/8 NPT
	mm	38	32	70	117	61	27	
130200	in	2	1.75	3.25	4.66	2.47	1.06	3/8 NPT
	mm	51	45	83	118	63	27	
130300	in	3	2.75	4.25	5.06	2.75	1.06	3/8 NPT
	mm	76	70	108	129	70	27	
130400	in	4	3.75	5.25	5.06	2.75	1.06	1/2 NPT
	mm	102	95	133	129	70	27	
130600	in	6	5.75	7.38	5.56	2.88	1.06	1/2 NPT
	mm	152	146	187	141	73	27	

DOWNLOAD drawings at EXAIR.com

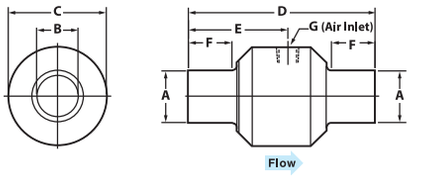

Light Duty Performance

80 PSIG (5.5 BAR)	Air Consumption	
Model #	SCFM	SLPM
130075	7.30	207
130100	10.70	303
130125	14.70	501
130150	20	566
130200	27.50	778
130300	45	1,274
130400	58.50	1,656
130600	80.20	2,270

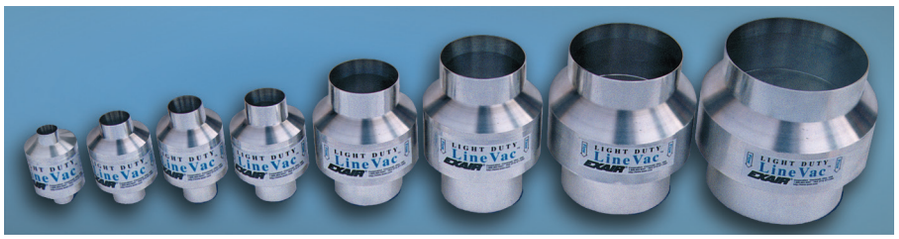

Light Duty Line Vacs are available in eight sizes for diameters from 3/4" to 6" (19 to 152mm).



Kits include a Light Duty Line Vac, filter separator and pressure regulator (with coupler).

Light Duty Line Vac Systems

Light Duty Line Vac Models		
Light Duty Line Vac Only **Light Duty Line Vac Kits -** include the Light Duty Line Vac, filter separator and pressure regulator (with coupler).		
Inlet/Outlet Diameter	Light Duty Line Vac Only Model	Light Duty Line Vac Kit Model
3/4" (19mm)	130075	132075
1" (25mm)	130100	132100
1-1/4" (32mm)	130125	132125
1-1/2" (38mm)	130150	132150
2" (51mm)	130200	132200
3" (76mm)	130300	132300
4" (102mm)	130400	132400
6" (152mm)	130600	132600

ORDER ONLINE at EXAIR.com

Accessories	
Model #	Description
9001	Auto Drain Filter Separator, 3/8 NPT, 65 SCFM (1,841 SLPM)
9002	Auto Drain Filter Separator, 3/4 NPT, 220 SCFM (6,230 SLPM)
9005	Oil Removal Filter, 3/8 NPT, 15-37 SCFM (425-1,048 SLPM)
9006	Oil Removal Filter, 3/4 NPT, 50-150 SCFM (1,416-4,248 SLPM)
9008	Pressure Regulator with Gauge, 1/4 NPT, 50 SCFM (1,416 SLPM)
9009	Pressure Regulator with Gauge, 3/4 NPT, 220 SCFM (6,230 SLPM)
Hose is available in 10', 20', 30', 40' and 50' lengths. Select the hose model number (diameter) and indicate the length with a dash. Example: A Model 6931-20 is 1" ID Hose x 20' long.	
6930-	Hose 3/4" ID
6931-	Hose 1" ID
6932-	Hose 1-1/4" ID
6933-	Hose 1-1/2" ID
6934-	Hose 2" ID
6936-	Hose 3" ID



PVC hose is available in lengths up to 50' (15.2m) and diameters up to 3" (76mm).

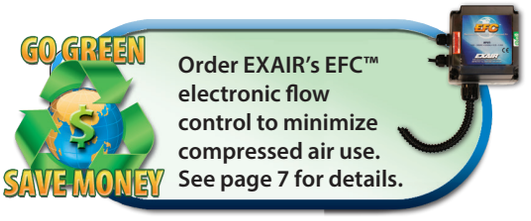

Order EXAIR's EFC™ electronic flow control to minimize compressed air use. See page 7 for details.

EXAIR_Cat36_25_FROMINDESIGN.indb 183 12/20/24 3:48 PM

EXAIR® Industrial Housekeeping Products

Eliminate expensive electric vacuum cleaners that wear out quickly!

What are EXAIR Industrial Housekeeping Products?

Busy industrial environments often produce byproducts, both liquid and solid, that can create troublesome messes that can be hard to handle for ordinary vacuums. Certain manufacturing processes, like manufacturing, milling, drilling, trimming, lubricating, washing and cleaning, all leave behind materials that must be cleaned, transported or repurposed in order to maintain smooth production flow.



EXAIR offers a full line of pneumatic products that are specifically engineered to quickly and quietly vacuum a wide variety of material into standard drums for easy switch-out, transfer, filtering, storage and more.

Why Pneumatic Vacuums?

Electric vacuums have limitations when used in industrial settings. Liquids, chips and other debris can overwork motors, and cause them to burn out quickly, leaving your process with expensive repairs or replacements. EXAIR vacuums operate solely on compressed air, meaning no electricity is needed at any point, making it safer to use in processes around, or involving liquids. Pneumatic vacuums also don't employ any motors or moving parts to wear out, making them relatively maintenance-free. This allows for extended use of the vacuums in applications requiring constant operation, as well as continued efficiency over long periods of time. EXAIR vacuums also meet all OSHA standards for noise exposure and vacuum quietly, while still maintaining the power and durability necessary for tough environments.

EXAIR's line of Industrial Housekeeping products offers adaptable and versatile solutions to handle your industrial cleanup needs.



EasySwitch® Wet-Dry Vac

The **EasySwitch Wet-Dry Vac** is an all-encompassing vacuum that offers both a dry and liquid cleanup solution with the simple switch of its patented filter lid. Capable of handling any job - wet, dry, light and heavy - the EasySwitch is a versatile cleanup solution for any process.



Reversible Drum Vac

The **Reversible Drum Vac** utilizes a two-way action, stainless-steel pump that allows for easy emptying and filling of drums. Able to empty or fill a 55-gallon drum in under two minutes, it's a great solution for processes needing easy pick up, transfer or storage of liquids.



High Lift Reversible Drum Vac

The **High Lift Reversible Drum Vac** employs the two-way action ideal for vacuuming and emptying drums but with the additional power necessary to pump liquids up to 15 ft in the air. Provides extra strength and lift for below grade areas such as sumps or tanks.



Chip Trapper

The **Chip Trapper** provides an efficient solution for cleaning debris like chips, swarf and shavings from used liquids. Employing a filter bag, particulate-filled liquids are pumped into the drum and then filter out any pesky debris and recycle valuable liquids.



High Lift Chip Trapper

The **High Lift Chip Trapper** offers a fast and easy way to filter chips and other debris from used liquids but with the extra power to handle lifting thicker and heavier liquids like coolants and oils higher in the air, or over longer distances.



Chip Vac

The **Chip Vac** is a durable industrial-duty vacuum designed with a powerful direct flow action for vacuuming media like metal, wood and plastic. Perfect for cleaning chips and other materials from work floors, machining centers, lathes, mills and more.



Heavy Duty HEPA Vac

The **Heavy Duty HEPA Vac** can transform an ordinary drum into a powerful HEPA (High Efficiency Particulate Air) quality industrial cleaner. Using a powerful micron filter, the HEPA vac is engineered to vacuum and filter contaminants in dusty environments or processes requiring frequent cleaning.



Heavy Duty Dry Vac

The **Heavy Duty Dry Vac** is EXAIR's strongest and most durable vacuum, able to handle rugged and abrasive cleanups. While useful in general purpose applications, it's also capable of handling tougher materials such as steel shot, garnet, metal chips and more.

EXAIR_Cat36_25_FROMINDESIGN.indb 184 12/20/24 3:48 PM

An INTELLIGENT COMPRESSED AIR® Product

EasySwitch® Wet-Dry Vac

Make the seamless transition from a dry material vacuum to liquids with ease!

What is the EasySwitch Vacuum?

EXAIR's patented* EasySwitch vacuum simplifies the filter change process when switching from vacuuming a dry material to a liquid or vice versa. Utilizing minimal compressed air, the EasySwitch is a powerful pneumatic vacuum that is ideal for any application - wet, dry, light and heavy.

The EasySwitch is designed to handle the toughest of industrial cleanup jobs with ease. EXAIR's EasySwitch vacuum uses a standard or HEPA certified filter when vacuuming dry material. The fast and simple conversion to vacuuming liquids is done by releasing one latch and simply removing the filter element. Using only compressed air, the EasySwitch vacuum creates a powerful vacuum without the need for electricity. Because the vacuum generator has no moving parts and uses no electricity, there is little concern for failed parts, motor failure or personnel safety associated with using electric vacuums for liquids.



Why the EasySwitch Vacuum?

The EasySwitch vacuum is an all-purpose pneumatic vacuum with the capability of handling any job dry or wet. Switching between vacuuming liquids or solids is as easy as removing the pleated filter when vacuuming liquids, and reinstalling directly into the open filter hatch when working with dry material. Like most of EXAIR's Intelligent Compressed Air® products, this compressed air-driven vacuum functions at a quiet 79 decibels without purchasing additional noise muffling accessories. This quiet operation feature protects operator hearing. In addition, the EasySwitch vacuum generally uses less compressed air to produce better or similar performance than other pneumatic competition. The EasySwitch vacuum also features accessory options of both a standard and anti-static vacuum hose, drum dolly for convenient movement, premium metal attachments and tool holder. Providing customers with an effective and adaptable method of cleanup, the EasySwitch vacuum is your all-encompassing solution to industrial housekeeping.

*Patent #11,969,134



Built to Last 5 yr. WARRANTY
See our Terms & Conditions

Industrial Housekeeping

Applications

- Coolant
- Chips
- Floor Cleanup
- Drains
- Shavings
- Sawdust
- Absorbent
- Mold and allergen removal

Advantages

- Easy to switch from liquid to dry material
- High performance with minimal air requirements
- Low sound level
- Maintenance free
- Safe – no electricity
- Spill free – auto safety shutoff
- No motors to clog or wear out
- Continuous duty

Warning:
Do Not Use With Combustible Dust

Warning:
Do Not Use With Any Material With A Low Flash Point Or With Flammable Liquids Such As Fuel Oil, Alcohol, Mineral Spirits, Gasoline Or Kerosene.

EXAIR_Cat36_25_FROMINDESIGN.indb 185 12/20/24 3:48 PM

EasySwitch Wet-Dry Vac

How The EasySwitch Wet-Dry Vac Works

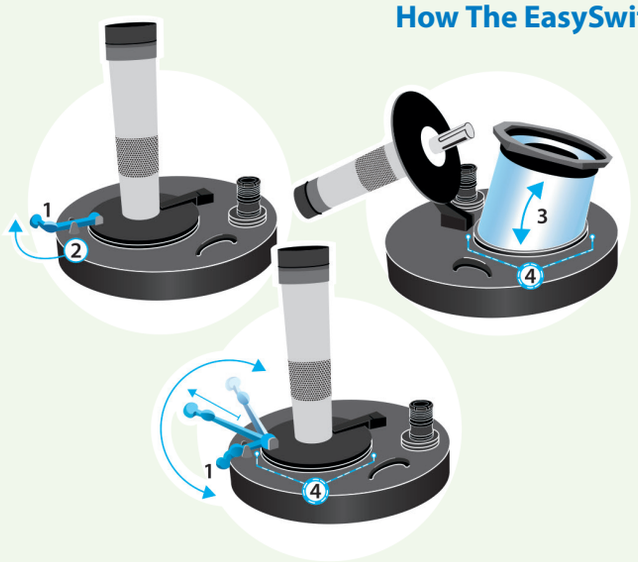

The EasySwitch vacuum utilizes a filter hatch, secured by one simple latch, for easy installation and replacement of filters. It does not require any additional springs, clips or closures. A rubber handle (1) is connected to the filter latch (2). Unlatching the handle from the drum lid will allow the hatch to be raised. When the hatch is raised, the filter (3) can be installed or uninstalled easily. The filter simply lifts out of the filter hatch hole, and be can reinstalled by placing the filter on top of edge gasket (4) on the filter hatch hole. For operation, close the hatch and secure the rubber handle (1). When the filter is installed, the vacuum will work with dry media and, when it is uninstalled, it will work with liquids. When the drum is filled with liquid, the vacuum is automatically turned off by a float shutoff.

Warning:

Wet: Do not use with any material with a low flash point or with flammable liquids such as fuel oil, alcohol, mineral spirits, gasoline or kerosene.

Dry: Do not use with combustible dust.

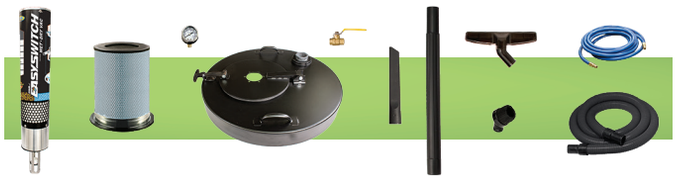

The Model 6101 EasySwitch Vac System includes a standard filter, 10' (3m) hose, 20' (6.1m) compressed air hose, plastic tools, shutoff valve and gauge. HEPA version also available.

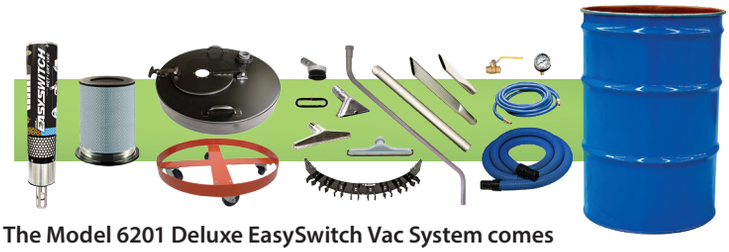

The Model 6201 Deluxe EasySwitch Vac System comes complete with standard filter, 10' (3m) static resistant hose, 20' (6.1m) compressed air hose, shutoff valve, gauge, heavy duty tools, tool holder and drum dolly. HEPA version also available.

Premium EasySwitch Vac Systems add a 55 gallon drum.

EasySwitch Wet-Dry Vac Specifications

Pressure Supply		Air Consumption		Lift		Vacuum Flow		Sound Level
PSIG	BAR	SCFM	SLPM	"H_2O	mm Hg	CFM	LPM	dBA
80	5.5	53	1,500	168	314	90	2,548	79
90	6.2	59	1,670	190	355	92	2,605	80
100	6.9	65	1,840	210	392	94	2,661	82

Conveying Rate Comparison for EasySwitch Wet-Dry Vac

Pressure Supply		Water		Plastic Tumbling Media		Steel Shot	
PSIG	BAR	GPM	LPM	Lbs/min	kg/min	Lbs/min	kg/min
80	5.5	36	136	68	31	54	24

EasySwitch Wet-Dry Vac Systems

Model #	Description
6101	55 Gallon EasySwitch Wet-Dry Vac System includes the EasySwitch Vac unit, EasySwitch drum lid, standard filter, pre-filter, 1/2" compressed air hose assembly, pressure gauge, 10' of 1.5" vacuum hose, crevice tool, 19" straight wand, skimmer tool and dust brush. (drum not included)
6201	55 Gallon Deluxe EasySwitch Wet-Dry Vac System - same as Model 6101 and adds a drum dolly, an upgrade to 10 feet of 1.5" antistatic hose, spill recovery kit, extension wand, round dust brush, 24" and 11" crevice tools, 12" wide floor tool and tool holder. (drum not included)
6301	55 Gallon Premium EasySwitch Wet-Dry Vac System - same as Model 6201 and adds a 55 gallon drum.
6103	55 Gallon HEPA EasySwitch Wet-Dry Vac System includes the EasySwitch Vac unit, EasySwitch drum lid, HEPA filter and pre-filter, 1/2" compressed air hose assembly, pressure gauge, 10' of 1.5" vacuum hose, crevice tool, 19" straight wand, skimmer tool and dust brush. (drum not included)
6203	55 Gallon Deluxe HEPA EasySwitch Wet-Dry Vac System - same as Model 6103 and adds a drum dolly, an upgrade to 10 feet of 1.5" antistatic hose, spill recovery kit, extension wand, round dust brush, 24" and 11" crevice tools, 12" wide floor tool and tool holder. (drum not included)
6303	55 Gallon Premium HEPA EasySwitch Wet-Dry Vac System - same as Model 6203 and adds a 55 gallon drum.

Accessories

Model #	Description	Model #	Description
902100	Standard Filter for EasySwitch Vac	902032	Replacement EasySwitch Vacuum Unit Gasket
902200	HEPA Filter	902184	Replacement Filter Port Gasket
902146	Pre-Filter for EasySwitch Vac	901176	Magnetic Tool Holder
902176	Replacement Muffler Material	902187	Latch Repair Kit
902031	Replacement Drum Lid Gasket	902190	Replacement E-Clip for Hinge

EXAIR_Cat36_25_FROMINDESIGN.indb 186 12/20/24 3:48 PM

An INTELLIGENT COMPRESSED AIR® Product

Reversible Drum Vac™

Pump 55 gallons in 90 seconds! Two-way pumping action!



EXAIR's Mini Reversible Drum Vac allows for quick and easy clean up of small messes.

What Is The Reversible Drum Vac?

A safe, maintenance free way to recover:

- Coolant
- Hydraulic oils
- Liquid spills
- Sludge and chips
- Tramp oil
- Waste water

Why The Reversible Drum Vac?

EXAIR's compressed air operated Reversible Drum Vac System attaches quickly to any closed head 30, 55 or 110 gallon drum. Its high powered vacuum fills a 55 gallon drum in less than two minutes. With the simple turn of a knob, the same stainless steel pump quickly empties the drum. Coolant sumps can be easily refilled, floor spills vacuumed, or contaminated liquids transferred to filtration tanks in minutes. The flow rate in and out of the drum can be controlled with the knob, making it ideal for dispensing liquids.



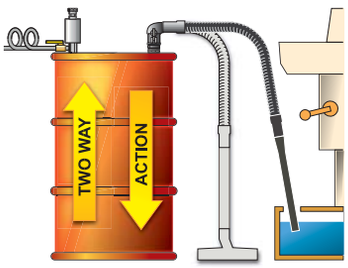

EXAIR's Mini Reversible Drum Vac System delivers the same two-way action for small jobs. It comes complete with a 5 gallon drum and all the tools.

Electrically operated "all purpose" vacuums aren't designed for use in industrial environments. As a result, motors wear out quickly and impellers clog. The Reversible Drum Vac does not use electricity and has no moving parts, assuring maintenance free operation. An automatic safety shutoff valve prevents spills or overfilling.



Model 6901 Spill Recovery Kit used with the Mini Reversible Drum Vac provides fast cleanup of messy spills.



Reversible Drum Vacs are designed to fit the 3/4 NPT bung of any closed top drum. This Model 6196-30 30 gallon system empties the coolant sump of a CNC.

Applications

- Coolant sumps
- Food processing
- Lathes
- Floor cleanup
- EDM machines
- Pits
- Screw machines
- Machining centers
- Tanks

Advantages

- No moving parts
- Maintenance free
- Stainless steel construction
- Safe – no electricity
- Built-in pressure/vacuum relief
- Compact and portable
- Installs quickly
- Spill free – auto safety shutoff
- Fits standard closed head drums

Built to Last 5 yr. WARRANTY

See our Terms & Conditions

EXAIR_Cat36_25_FROMINDESIGN.indb 187 12/20/24 3:48 PM

Reversible Drum Vac

How The Reversible Drum Vac Works

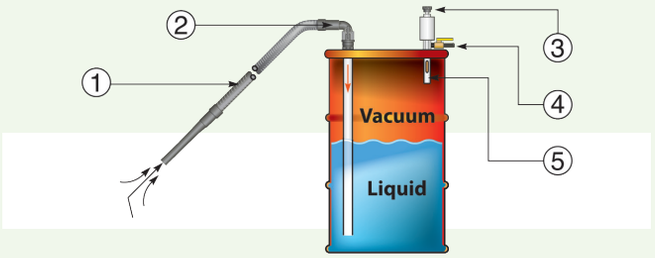

The flex hose (1) is attached to the barbed connection (2) on the Reversible Drum Vac system. The knob (3) on the Reversible Drum Vac pump is set to the "fill" position. The air supply valve (4) is opened to permit compressed air at 80-100 PSIG (5.5 - 6.9 BAR) to flow through the Reversible Drum Vac pump which pulls liquid through the flex hose and into the drum. When all liquid is in the drum, the air supply is turned off. If liquid exceeds the drum capacity, the safety shut-off valve (5) will prevent overfilling. The liquid can then be pumped back out of the flex hose (1) by setting the knob (3) on the Reversible Drum Vac pump to the "empty" position and opening the air supply valve.

Warning: Do not use with any material with a low flash point or with flammable liquids such as fuel oil, alcohol, mineral spirits, gasoline or kerosene.

Reversible Drum Vac System Specifications

Pressure Supply 80 PSIG (5.5 BAR)	Air Consumption		Lift		Water Flow Rate		Sound Level
DESCRIPTION	SCFM	SLPM	"H_2O	mm Hg	GPM	LPM	86 dBA
REVERSIBLE DRUM VAC	19	538	96	179	30	114	



The Model 6196, Model 6196-30 and Model 6196-110 Reversible Drum Vac Systems include a vacuum hose and an aluminum wand.



Model 6196-5 Mini Reversible Drum Vac System includes a 5 gallon drum w/lid, ABS spill recovery kit, vacuum hose and all tools.

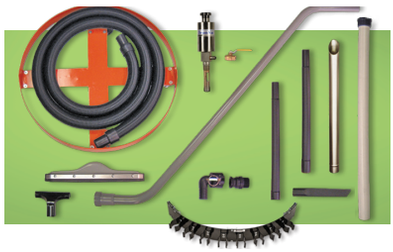

Model 6296 and Model 6296-30 Deluxe Reversible Drum Vac Systems include a drum dolly, ABS spill recovery kit, vacuum hose, tool holder and all tools.



Premium Reversible Drum Vac Systems include the drum, drum dolly, an upgrade to heavy duty aluminum tools, ABS spill recovery kit, tool holder and air hose.

Reversible Drum Vac Systems

Model #	Description
6196	55 Gallon Reversible Drum Vac System includes two-way pump assembly (1/4 NPT), shutoff valve, 10' (3m) flexible vacuum hose (1-1/2"/38mm I.D.) with 90° quick release elbow connection, (1) aluminum wand (drum not included).
6196-30	30 Gallon Reversible Drum Vac System - same as Model 6196 except fits a 30 gallon drum (drum not included).
6196-110	110 Gallon Reversible Drum Vac System - same as Model 6196 except fits a 110 gallon drum (drum not included).
6196-5	5 Gallon Mini Reversible Drum Vac System includes two-way pump assembly (1/4 NPT), shutoff valve, 5 gallon container with lid and lock ring, 10' (3m) flexible vacuum hose (1-1/2"/38mm I.D.) with 90° quick release elbow connection, aluminum wand, ABS spill recovery kit, (2) extension wands, crevice tool and skimmer tool.
6296	55 Gallon Deluxe Reversible Drum Vac System - same as Model 6196 and adds drum dolly, ABS spill recovery kit, (2) extension wands, crevice tool, skimmer tool and tool holder (drum not included).
6296-30	30 Gallon Deluxe Reversible Drum Vac System - same as Model 6296 except fits 30 gallon drum (drum not included).
6296-5	5 Gallon Deluxe Mini Reversible Drum Vac System - same as Model 6196-5 and adds drum dolly.
6396	55 Gallon Premium Reversible Drum Vac System - same as Model 6196 and adds the 55 gallon drum with lock ring and lid, drum dolly, ABS spill recovery kit, 11" (279mm) and 24" (610mm) aluminum crevice tools, skimmer tool, tool holder and 20' (6.1m) air hose.
6396-30	30 Gallon Premium Reversible Drum Vac System - same as Model 6396 except includes a 30 gallon drum.
6396-110	110 Gallon Premium Reversible Drum Vac System - same as Model 6396 except includes a 110 gallon drum.
6091	Reversible Drum Vac Only - included in all systems listed above.

Accessories

Model #	Description	Model #	Description
9001	Auto Drain Filter Separator, 3/8 NPT, 65 SCFM (1,841 SLPM)	901071	Heavy Duty Aluminum Tools plus Tool Holder
9005	Oil Removal Filter, 3/8 NPT, 15-37 SCFM (425-1,048 SLPM)	9041-5	5 Gallon Drum Dolly
901067-5	5 Gallon Drum with lock ring and lid	9041-30	30 Gallon Drum Dolly
901067-30	30 Gallon Drum with lock ring and lid	9041	55 Gallon Drum Dolly
901067	55 Gallon Drum with lock ring and lid	9041-110	110 Gallon Drum Dolly
901067-110	110 Gallon Drum with lock ring and lid	6901	Spill Recovery Kit includes a one-piece 54" (1372mm) ABS wand and 14" (356mm) double blade squeegee tool.
6569-20	20' (6.1m) Flexible Vacuum Hose (1-1/2"/38mm I.D.)	901176	Magnetic Tool Holder

EXAIR_Cat36_25_FROMINDESIGN.indb 188 12/20/24 3:48 PM

An INTELLIGENT COMPRESSED AIR® Product

High Lift Reversible Drum Vac™

Two-way pump provides maximum lift (up to 15 feet)!

Move thick liquids (up to 1400 cP) through 20' of hose!



What Is The High Lift Reversible Drum Vac?

A safe, powerful, and maintenance free way to recover:

- Coolant
- Hydraulic oils
- Liquid spills
- Sludge and chips
- Tramp oil
- Waste water

Why The High Lift Reversible Drum Vac?

EXAIR's compressed air operated High Lift Reversible Drum Vac System attaches quickly to any closed head 30, 55 or 110 gallon drum. Its high powered vacuum is able to lift liquids up to 15 feet and fill a 55 gallon drum in less than 85 seconds. With the simple turn of a knob, the same stainless steel pump quickly empties the drum. The High Lift Reversible Drum Vac has the extra power you need to move liquids from below grade work areas, sumps or tanks up to 15 feet deep!

Like all of EXAIR's industrial vacuums, the High Lift Reversible Drum Vac uses no electricity and has no moving parts which assures maintenance free operation. It is designed for continuous and heavy duty applications where electric vacuums fail due to motor wear or clogged impellers. This vacuum efficiently and safely uses the compressed air in your facility. An automatic safety shutoff valve prevents overfilling.

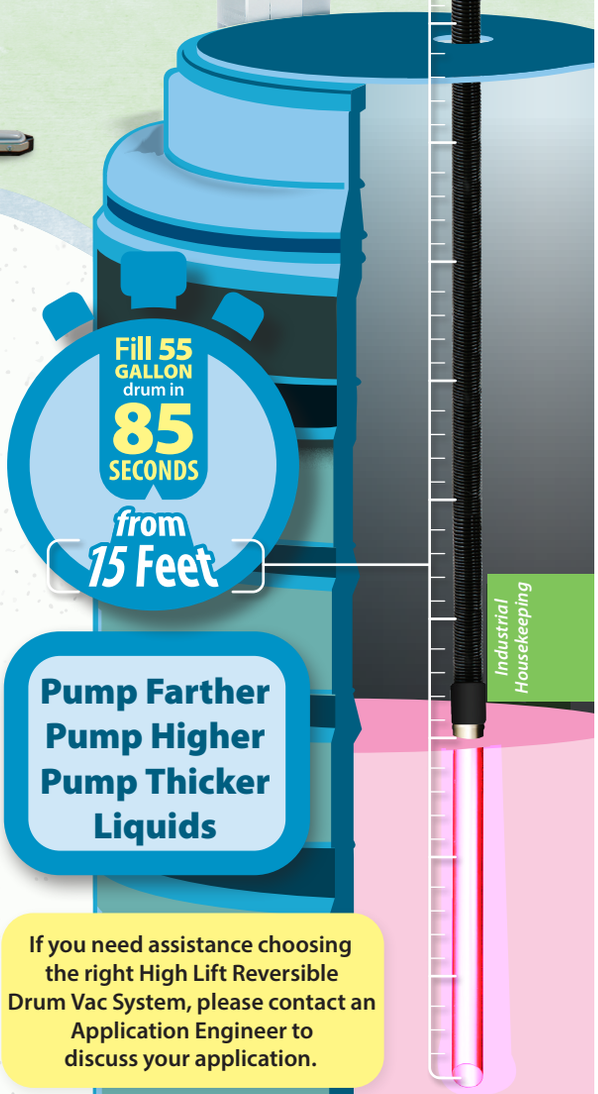

Applications

- Below grade coolant sumps
- Deep wells
- Underground storage tanks
- Pits
- Drains
- Deep hole broaching
- Bulk storage tanks
- Cisterns

Advantages

- No moving parts
- Maintenance free
- Stainless steel construction
- Safe – no electricity
- Built-in pressure/vacuum relief
- Compact and portable
- Installs quickly
- Spill free – auto safety shutoff
- Fits standard closed head drums

If you need assistance choosing the right High Lift Reversible Drum Vac System, please contact an Application Engineer to discuss your application.

EXAIR®
11510 Goldcoast Drive • Cincinnati, OH 45249-1621 • Phone (513) 671-3322
FAX (513) 671-3363 • E-mail: techelp@exair.com • www.exair.com

Order Direct We Ship From Stock

EXAIR_Cat36_25_FROMINDESIGN.indb 189 12/20/24 3:48 PM

High Lift Reversible Drum Vac

How The High Lift Reversible Drum Vac Works

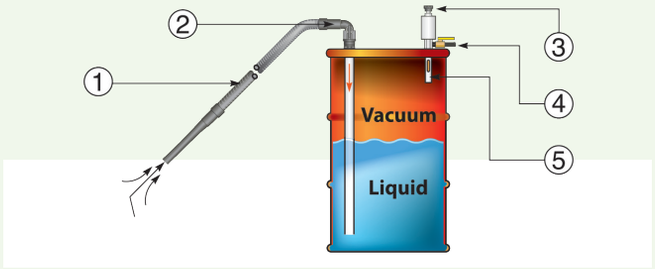

The flex hose (1) is attached to the barbed connection (2) on the Reversible Drum Vac system. The knob (3) on the High Lift Reversible Drum Vac pump is set to the "fill" position. The air supply valve (4) is opened to permit compressed air at 80-100 PSIG (5.5 - 6.9 BAR) to flow through the High Lift Reversible Drum Vac pump which pulls liquid through the flex hose and into the drum. When all liquid is in the drum, the air supply is turned off. If liquid exceeds the drum capacity, the safety shut-off valve (5) will prevent overfilling. The liquid can then be pumped back out of the flex hose (1) by setting the knob (3) on the High Lift Reversible Drum Vac pump to the "empty" position and opening the air supply valve.

Warning: Do not use with any material with a low flash point or with flammable liquids such as fuel oil, alcohol, mineral spirits, gasoline or kerosene.

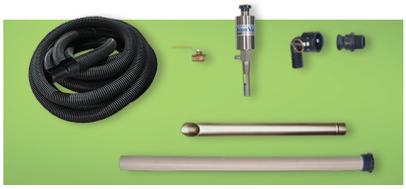

Model 6195, Model 6195-30 and Model 6195-110 High Lift Reversible Drum Vac Systems include a vacuum hose and an aluminum wand.



Model 6295 and Model 6295-30 Deluxe High Lift Reversible Drum Vac Systems include a drum dolly, ABS spill recovery kit, vacuum hose, tool holder and all tools.



Premium High Lift Reversible Drum Vac Systems include the drum, drum dolly, an upgrade to heavy duty aluminum tools, ABS spill recovery kit, tool holder and air hose.

High Lift Reversible Drum Vac System Specifications

Pressure Supply 80 PSIG (5.5 BAR)	Air Consumption		Lift		Water Flow Rate		Sound Level
DESCRIPTION	SCFM	SLPM	"H_2O	mm Hg	GPM	LPM	
HIGH LIFT REVERSIBLE DRUM VAC	43	1,218	180	336	30	114	83 dBA



Deluxe and Premium High Lift Drum Vac Systems include a drum dolly.

High Lift Reversible Drum Vac Systems	
Model #	**Description**
6195	55 Gallon High Lift Reversible Drum Vac System includes two-way pump assembly (1/4 NPT), shutoff valve, 20' (6.1m) flexible vacuum hose (1-1/2"/38mm I.D.) with 90° quick release elbow connection, (1) aluminum wand (drum not included).
6195-30	30 Gallon High Lift Reversible Drum Vac System - same as Model 6195 except fits a 30 gallon drum (drum not included).
6195-110	110 Gallon High Lift Reversible Drum Vac System - same as Model 6195 except fits a 110 gallon drum (drum not included).
6295	TOP PICK 55 Gallon Deluxe High Lift Reversible Drum Vac System - same as Model 6195 and adds drum dolly, ABS spill recovery kit, (2) extension wands, crevice tool, skimmer tool and tool holder (drum not included).
6295-30	30 Gallon Deluxe High Lift Reversible Drum Vac System - same as Model 6295 except fits 30 gallon drum (drum not included).
6395	55 Gallon Premium High Lift Reversible Drum Vac System - same as Model 6195 and adds the 55 gallon drum with lock ring and lid, drum dolly, ABS spill recovery kit, 11" (279mm) and 24" (610mm) aluminum crevice tools, skimmer tool, tool holder and 20' (6.1m) air hose.
6395-30	30 Gallon Premium High Lift Reversible Drum Vac System - same as Model 6395 except includes a 30 gallon drum.
6395-110	110 Gallon Premium High Lift Reversible Drum Vac System - same as Model 6395 except includes a 110 gallon drum.
6095	High Lift Reversible Drum Vac Only - included in all systems listed above.

Accessories			
Model #	**Description**	**Model #**	**Description**
9001	Auto Drain Filter Separator, 3/8 NPT, 65 SCFM (1,841 SLPM)	**901071**	Heavy Duty Aluminum Tools plus Tool Holder
9006	Oil Removal Filter, 3/4 NPT, 50-150 SCFM (1,416-4,248 SLPM)	**9041-30**	30 Gallon Drum Dolly
901067-30	30 Gallon Drum with lock ring and lid	**9041**	55 Gallon Drum Dolly
901067	55 Gallon Drum with lock ring and lid	**9041-110**	110 Gallon Drum Dolly
901067-110	110 Gallon Drum with lock ring and lid	**6901**	Spill Recovery Kit includes a one-piece 54" (1372mm) ABS wand and 14" (356mm) double blade squeegee tool.
6569-20	20' (6.1m) Flexible Vacuum Hose (1-1/2"/38mm I.D.)	**901176**	Magnetic Tool Holder

EXAIR_Cat36_25_FROMINDESIGN.indb 190 12/20/24 3:48 PM

Chip Trapper™

Filter the chips out of your used coolant and cutting oils!

Vacuums in the liquid with solids, pumps out only the liquid!



What Is The Chip Trapper?

The patented* Chip Trapper offers a fast, easy way to clean chips, swarf and shavings out of used coolants and other liquids. The Chip Trapper vacuums the coolant or liquid that is filled with debris and traps all the solids in a reusable filter bag. Only the liquid pumps back out. It is ideal for use on machines with sumps, parts washers, tanks and storage containers of contaminated liquids.

The Chip Trapper uses EXAIR's compressed air powered Reversible Drum Vac (included) that can fill or empty a 55 gallon drum in less than two minutes. Simply set the Reversible Drum Vac pump and directional flow control valve on top of the drum to "fill" for it to quickly vacuum the liquid with solids. Once the sump, pit or tank is empty, set the pump and directional valve to "empty" for it to pump out clean coolant/liquid. All the chips and other solids are trapped inside the reusable filter bag of the Chip Trapper.



SCAN & WATCH the video!
https://exair.co/04-ctrvid



The Chip Trapper vacuums dirty coolant and chips into the drum.

Why The Chip Trapper?

A sudden lack of coolant flow in a machining operation will likely damage the part and expensive tooling. Machine tools commonly discharge some chips and shavings into the coolant sump. As the chips accumulate and mound up, the coolant flow used to flood the part and tooling becomes restricted. Some high pressure coolant systems sound an audible alarm and abruptly shut down the machine when low coolant flow occurs. This results in downtime to fix the problem and clear the alarm. That isn't the case with standard machines where immediate damage can occur if the operator fails to spot the lack of coolant. Regular cleaning of the coolant sump with the Chip Trapper can quickly eliminate this very costly problem.



The Chip Trapper pumps the coolant back into the sump – free of chips and debris.

Applications

- CNC's
- Lathes
- Saws
- Mills
- Drills
- Parts washers
- Pits
- Tanks
- Containers
- Grinders

Advantages

- Removes unwanted solids from liquid
- Recycles coolants
- No moving parts
- No motors to clog or wear out
- Self priming stainless steel pump
- Safe - no electricity
- Built-in pressure/vacuum relief
- Drum is included
- Spill free – auto safety shutoff
- Quiet



Chip Trapper filters out solids from parts washer fluids.

*Patent #8153001 and #8268179

EXAIR_Cat36_25_FROMINDESIGN.indb 191 12/20/24 3:48 PM

Chip Trapper

How The Chip Trapper Works

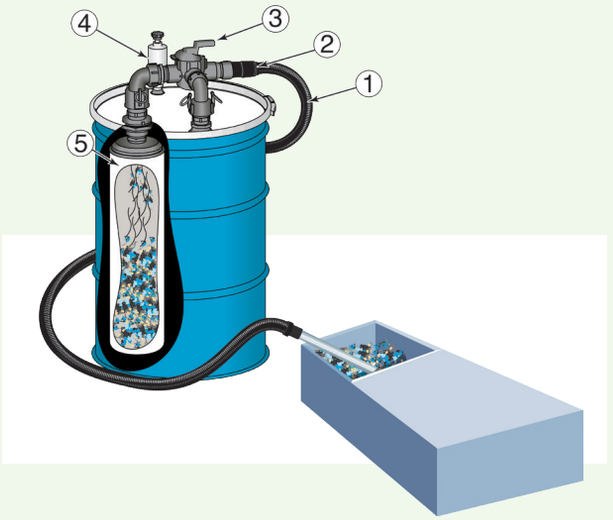

The vacuum hose (1) is attached to the barbed connection of the Chip Trapper (2). The directional flow control valve on top of the drum (3) and knob on the pump (4) are set to the "fill" position. The air supply valve is opened to permit compressed air at 80-100 PSIG (5.5 – 6.9 BAR) to flow through the pump which pulls the liquid through the hose, then into the reusable filter bag (5). When all liquid is in the drum, the air supply is automatically turned off. The filtered liquid can then be pumped out by setting the directional flow control valve on top of the drum and the knob on the pump to the "empty" position. Once the air supply valve is opened, the air pushes the liquid back through the hose while all solids remain in the reusable filter bag.

Warning: **Do not use with any material with a low flash point or with flammable liquids such as fuel oil, alcohol, mineral spirits, gasoline or kerosene.**

Chip Trapper System Specifications

Pressure Supply 80 PSIG (5.5 BAR)	Air Consumption		Water Flow Rate		Sound Level
DESCRIPTION	SCFM	SLPM	GPM	LPM	86 dBA
CHIP TRAPPER	19	538	30	114	

The filter bag included with the system provides 5 micron filtration.

Built To Last

The stainless steel pump has no motors or impellers to clog or wear out and there is no electricity or shock hazard! Safe operation is assured with a built-in pressure/vacuum relief and an automatic safety shutoff valve that prevents spills or overfilling.



The Chip Trapper includes the pump assembly with directional flow valve, a 30, 55 or 110 gallon drum, 10' (3m) chemical resistant hose, 20' (6.1m) compressed air hose, aluminum chip wand, (2) reusable 5 micron filter bags and drum dolly.

Order Direct
We Ship From Stock

Industrial Housekeeping

Chip Trapper Systems	
Model #	**Description**
6198	55 Gallon Chip Trapper System includes the Reversible Drum Vac pump assembly, directional flow valve, 55 gallon drum, lever lock drum lid, shutoff valve, 10' (3m) flexible vacuum hose (1-1/2"/38mm I.D.), 20' (6.1m) compressed air hose, chip wand, (2) filter bags and drum dolly.
6198-30	30 Gallon Chip Trapper System - same as Model 6198 except includes a 30 gallon drum
6198-110	110 Gallon Chip Trapper - same as Model 6198 except includes a 110 gallon drum.
6091	Reversible Drum Vac Only - included in all systems listed above.

Accessories			
Model #	**Description**	**Model #**	**Description**
901060-1	Replacement Filter Bag, 1 micron	**901060-200**	Replacement Filter Bag, 200 micron
901060	Replacement Filter Bag, 5 micron	**901060-SP**	Filter Bag Sample Pack- Includes one each 1, 25, 50, 100 & 200 micron bags
901060-25	Replacement Filter Bag, 25 micron	**6901**	Spill Recovery Kit includes a one-piece 54" (1372mm) ABS wand and 14" (356mm) double blade squeegee tool
901060-50	Replacement Filter Bag, 50 micron		
901060-100	Replacement Filter Bag, 100 micron	**9001**	Auto Drain Filter Separator, 3/8 NPT, 65 SCFM (1,841 SLPM)

EXAIR_Cat36_25_FROMINDESIGN.indb 192 12/20/24 3:48 PM

An INTELLIGENT COMPRESSED AIR® Product

High Lift Chip Trapper™

Filter chips and solids out of used coolant and liquids from below grade sumps or elevated tanks!

Vacuum in liquid with solids and pump out only the liquid, with 15 feet of lift!



What Is The High Lift Chip Trapper?

The patented* High Lift Chip Trapper offers a fast, easy way to clean chips, swarf and shavings out of used coolants and other liquids. The High Lift Chip Trapper vacuums the coolant or liquid that is filled with debris and traps all the solids in a reusable filter bag. Only the liquid pumps back out. It is ideal for use on pits, wells, below grade sumps, tanks and storage containers of contaminated liquids.

Why The High Lift Chip Trapper?

EXAIR's compressed air operated High Lift Chip Trapper System attaches quickly to the included 30, 55 or 110 gallon drum lid. Its high powered vacuum is able to lift liquids up to 15 feet or pump liquids from as far as 20 feet and fill a 55 gallon drum in less than 85 seconds. With the simple turn of a knob, the same stainless steel pump quickly empties the drum. The High Lift Chip Trapper has the extra power you need to move liquids from below grade work areas, sumps or tanks.

Wells, pits, below grade or elevated tanks can accumulate debris. This debris can cause problems when the liquid is transferred into a machine or process. Waste oil for heating or recycled lubricants which are suitable for dirtier jobs can be used without worry of solids damaging equipment. The heavy duty power of the High Lift Chip Trapper is capable of moving high viscosity liquids up to 1400 centipoise.

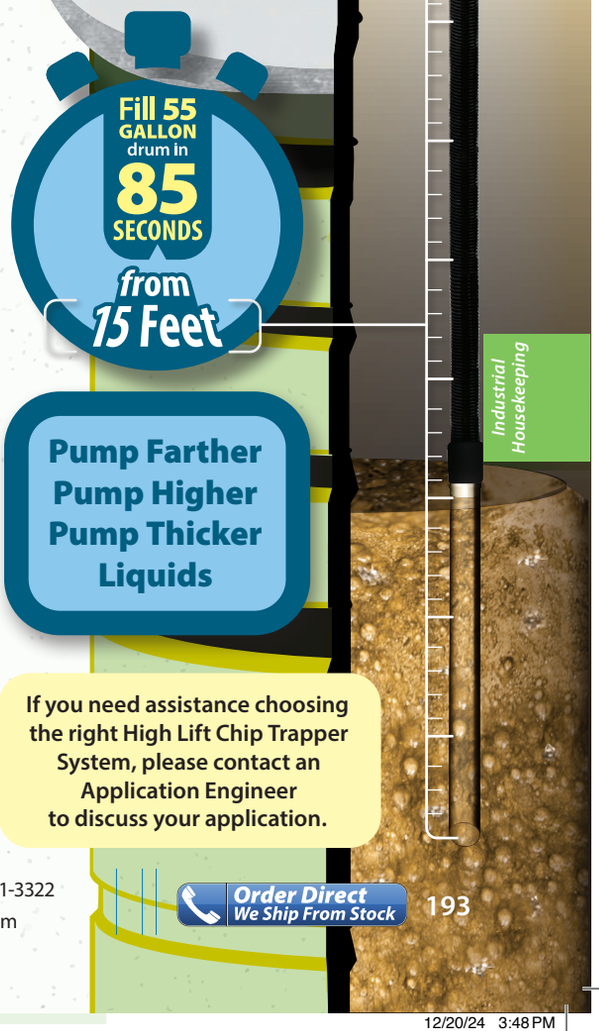

Applications

- Below grade coolant sumps
- Deep wells
- Underground storage tanks
- Pits
- Drains
- Deep hole broaching
- Bulk storage tanks
- Cisterns

Advantages

- Removes unwanted solids from liquid
- Recycles coolants
- No moving parts
- No motors to clog or wear out
- Self priming stainless steel pump
- Safe - no electricity
- Built-in pressure/vacuum relief
- Spill free – auto safety shutoff
- Quiet

*Patent #8153001 and #8268179

If you need assistance choosing the right High Lift Chip Trapper System, please contact an Application Engineer to discuss your application.

EXAIR®
11510 Goldcoast Drive • Cincinnati, OH 45249-1621 • Phone (513) 671-3322
FAX (513) 671-3363 • E-mail: techelp@exair.com • www.exair.com

EXAIR_Cat36_25_FROMINDESIGN.indb 193 12/20/24 3:48 PM

High Lift Chip Trapper

How The High Lift Chip Trapper Works

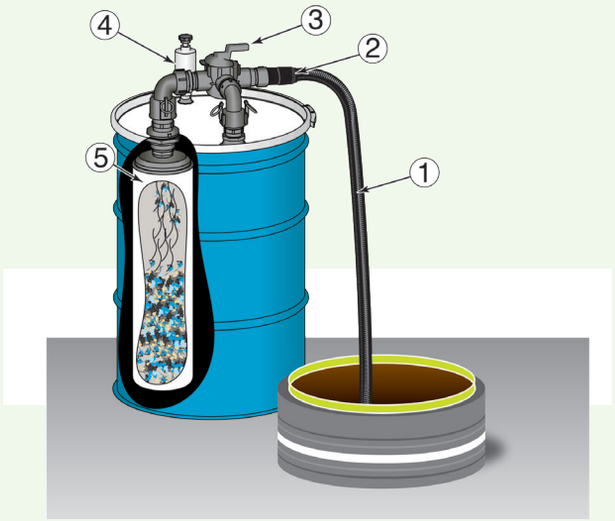

The vacuum hose (1) is attached to the barbed connection of the High Lift Chip Trapper (2). The directional flow control valve on top of the drum (3) and knob on the pump (4) are set to the "fill" position. The air supply valve is opened to permit compressed air at 80-100 PSIG (5.5 – 6.9 BAR) to flow through the pump which pulls the liquid through the hose, then into the reusable filter bag (5). When all liquid is in the drum, the air supply is turned off. The filtered liquid can then be pumped out by setting the directional flow control valve on top of the drum and the knob on the pump to the "empty" position. Once the air supply valve is opened, the air pushes the liquid back through the hose while all solids remain in the reusable filter bag.

Warning: Do not use with any material with a low flash point or with flammable liquids such as fuel oil, alcohol, mineral spirits, gasoline or kerosene.

High Lift Chip Trapper System Specifications

Pressure Supply 80 PSIG (5.5 BAR)	Air Consumption		Lift		Water Flow Rate		Sound Level
DESCRIPTION	SCFM	SLPM	"H_2O	mm Hg	GPM	LPM	83 dBA
HIGH LIFT CHIP TRAPPER	43	1,218	180	336	30	114	

Built To Last

The stainless steel pump has no motors or impellers to clog or wear out and there is no electricity or shock hazard! Safe operation is assured with a built-in pressure/vacuum relief and an automatic safety shutoff valve that prevents spills or overfilling.

Built to Last 5 yr. WARRANTY

See page 4 for complete details.



The High Lift Chip Trapper includes the pump assembly with directional flow valve, a 30, 55 or 110 gallon drum, 20' (6.1m) chemical resistant hose, 20' (6.1m) compressed air hose, aluminum chip wand, (2) reusable 5 micron filter bags and drum dolly.



The 5 micron filter bag traps all the chips so no solids get pumped back out of the drum.

High Lift Chip Trapper Systems	
Model #	**Description**
6190	55 Gallon High Lift Chip Trapper System includes the High Lift Reversible Drum Vac pump assembly, directional flow valve, 55 gallon drum, lever lock drum lid, shutoff valve, 20' (6.1m) flexible vacuum hose (1-1/2"/38mm I.D.), 20' (6.1m) compressed air hose, chip wand, (2) filter bags and drum dolly.
6190-30	30 Gallon High Lift Chip Trapper System - same as Model 6190 except includes a 30 gallon drum.
6190-110	110 Gallon High Lift Chip Trapper - same as Model 6190 except includes a 110 gallon drum.
6095	High Lift Reversible Drum Vac Only- Included in all systems listed above.

Accessories			
Model #	**Description**	**Model #**	**Description**
901060-1	Replacement Filter Bag, 1 micron	**901060-200**	Replacement Filter Bag, 200 micron
901060	Replacement Filter Bag, 5 micron	**901060-SP**	Filter Bag Sample Pack- Includes one each 1, 25, 50, 100 & 200 micron bags
901060-25	Replacement Filter Bag, 25 micron	**6901**	Spill Recovery Kit includes a one-piece 54" (1372mm) ABS wand and 14" (356mm) double blade squeegee tool
901060-50	Replacement Filter Bag, 50 micron		
901060-100	Replacement Filter Bag, 100 micron	**9001**	Auto Drain Filter Separator, 3/8 NPT, 65 SCFM (1,841 SLPM)

Chip Vac™

Vacuums chips directly into an open-top drum with no moving parts!



What Is The Chip Vac?



EXAIR's Chip Vac picks up dry or wet chips and delivers them directly to an ordinary open-top drum. The Chip Vac is used to clean chips from fixtures, floors and work surfaces of machining centers, lathes, saws, mills and other industrial equipment. The powerful suction is ideal for fast and efficient cleaning.

EXAIR's Mini Chip Vac System delivers the same cleaning power for small jobs. It comes complete with a 5 gallon drum and all the tools.

Why The Chip Vac?

The compressed air operated Chip Vac is an industrial duty vacuum designed specifically for vacuuming chips. It creates a powerful direct flow action that vacuums metal, wood or plastic chips into an ordinary drum. Designed for occasional use with dusty materials, the included filter bag keeps the surrounding air clean.

Electrically operated "all purpose" vacuums aren't designed for use in industrial environments. As a result, motors wear out quickly and impellers clog. The Chip Vac has no moving parts to wear out or break which ensures long life. Sound level is half that of electric vacs.

The Chip Vac Systems include a drum lid with a locking ring that fits an open top drum. In less than a minute, the Chip Vac can be removed and easily placed onto another drum to keep different materials separate for recycling. Constant heavy lifting and dumping of the vacuum cleaner tanks is eliminated since all chips are vacuumed directly into the drum.



The Chip Vac removes abrasive stainless steel chips from a CNC.



110 Gallon Chip Vac offers maximum capacity cleanup on a large machining operation.



The Mini Chip Vac allows for easy clean up of small messes.

Applications

- CNC's
- Lathes
- Saws
- Mills
- Drills
- Grinders
- Routers
- Molding machines
- Absorbent pick-up

Advantages

- No moving parts
- Low cost
- No motors to clog or wear out
- No electricity
- Chips go directly into a drum
- Powerful direct flow action
- Includes accessories
- 50% quieter than electric vacs

EXAIR_Cat36_25_FROMINDESIGN.indb 195 12/20/24 3:48 PM

Chip Vac

How The Chip Vac Works

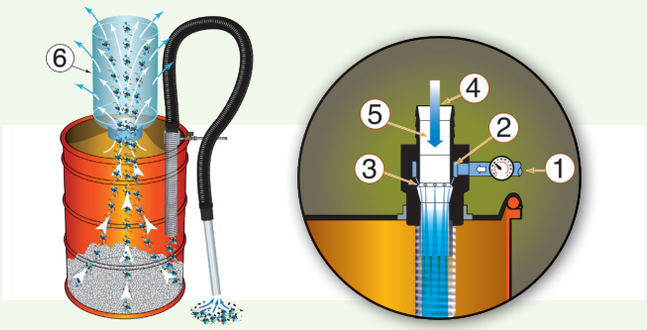

Compressed air, normally 80-100 PSIG (5.5 - 6.9 BAR), flows through the inlet (1) into an annular plenum chamber (2). It is then injected into the throat through directed nozzles (3). These jets of air create a vacuum at the intake (4) which draws material in, accelerates it through the unit (5), and directs it to the bottom of the drum. The airflow exhausts through the port in the drum lid. Airborne particles are trapped by the filter bag (6).

Warning: Do not use with combustible dust.

The Chip Vac System can be used with an open head steel, fiber or plastic drum that is in good condition (ANSI Standard #MH2-2004). To prevent material contamination, a poly drum liner can be inserted into the drum.



Deluxe and Premium Chip Vac Systems include a drum dolly.

Chip Vac System Specifications

Size	Pressure Supply		Air Consumption		INLET	Sound Level
	PSIG	BAR	SCFM	SLPM		
110, 55 & 30 Gallon	80	5.5	40	1,132	3/8 NPT	77 dBA
5 Gallon	80	5.5	33	934	3/8 NPT	

Air consumption has been minimized by using the appropriate amount of air required for vacuuming chips.



The Model 6193 Chip Vac System includes a vacuum hose, chip wand and plastic tools.



The Model 6193-5 Mini Chip Vac System includes a vacuum hose, 5 gallon drum, chip wand and plastic tools.



Premium Chip Vac Systems include the drum, drum dolly, an upgrade to static resistant hose, heavy duty aluminum tools, tool holder, air hose and quick connects fittings. (Model 6393 shown.)

Chip Vac Systems	
Model #	**Description**
6193	55 Gallon Chip Vac System includes the Chip Vac, lever lock drum lid, shutoff valve, filter bag, 10' (3m) flexible vacuum hose (1-1/2"/38mm I.D.), chip wand, (2) extension wands, crevice tool, brush, skimmer tool (drum not included).
6193-30	30 Gallon Chip Vac System - same as Model 6193 except fits a 30 gallon drum (drum not included).
6193-5	5 Gallon Mini Chip Vac System - includes the Chip Vac (3/8 NPT), shutoff valve, filter bag, 5 gallon container with lid and lock ring, 10' (3m) flexible vacuum hose (1-1/2"/38mm I.D.), aluminum chip wand, (2) extension wands, crevice tool, brush, skimmer tool.
6293	55 Gallon Deluxe Chip Vac System - same as Model 6193 and adds drum dolly and tool holder (drum not included).
6293-30	30 Gallon Deluxe Chip Vac System - same as Model 6293 except fits 30 gallon drum (drum not included).
6293-5	5 Gallon Deluxe Chip Vac System - same as Model 6193-5 and adds drum dolly.
6393	55 Gallon Premium Chip Vac System - same as Model 6193 and adds a 55 gallon drum, drum dolly, an upgrade to static resistant hose, an upgrade to heavy duty aluminum tools, 20' (6.1m) air hose, tool holder and quick connects fittings.
6393-30	30 Gallon Premium Chip Vac System - same as Model 6393 except includes 30 gallon drum.
6393-110	110 Gallon Premium Chip Vac System - same as Model 6393 except includes a 110 gallon drum.
6093	Chip Vac Only - included in all 30 gallon through 110 gallon systems listed above.
6093-5	Mini Chip Vac Only - included with 6193-5 and 6293-5 5 gallon systems.

Accessories			
Model #	**Description**	**Model #**	**Description**
6804	Replacement Filter Bag	**9041-5**	5 Gallon Drum Dolly
901176	Magnetic Tool Holder	**9041-30**	30 Gallon Drum Dolly
901071	Heavy Duty Aluminum Tools plus Tool Holder	**9041**	55 Gallon Drum Dolly
6569-20	20' (6.1m) Flexible Vacuum Hose (1-1/2" / 38mm I.D.)	**9041-110**	110 Gallon Drum Dolly

Industrial Housekeeping

TOP PICK

Chip Vac

How The Chip Vac Works

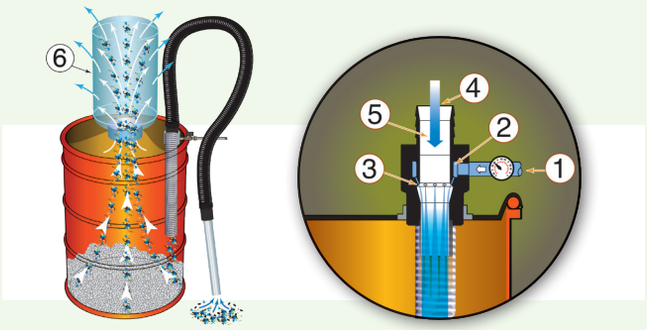

Compressed air, normally 80-100 PSIG (5.5 - 6.9 BAR), flows through the inlet (1) into an annular plenum chamber (2). It is then injected into the throat through directed nozzles (3). These jets of air create a vacuum at the intake (4) which draws material in, accelerates it through the unit (5), and directs it to the bottom of the drum. The airflow exhausts through the port in the drum lid. Airborne particles are trapped by the filter bag (6).

Warning: Do not use with combustible dust.

The Chip Vac System can be used with an open head steel, fiber or plastic drum that is in good condition (ANSI Standard #MH2-2004). To prevent material contamination, a poly drum liner can be inserted into the drum.



Deluxe and Premium Chip Vac Systems include a drum dolly.

Chip Vac System Specifications

Size	Pressure Supply		Air Consumption		INLET	Sound Level
	PSIG	BAR	SCFM	SLPM		
110, 55 & 30 Gallon	80	5.5	40	1,132	3/8 NPT	77 dBA
5 Gallon	80	5.5	33	934	3/8 NPT	

Air consumption has been minimized by using the appropriate amount of air required for vacuuming chips.



The Model 6193 Chip Vac System includes a vacuum hose, chip wand and plastic tools.



The Model 6193-5 Mini Chip Vac System includes a vacuum hose, 5 gallon drum, chip wand and plastic tools.



Premium Chip Vac Systems include the drum, drum dolly, an upgrade to static resistant hose, heavy duty aluminum tools, tool holder, air hose and quick connects fittings. (Model 6393 shown.)

Chip Vac Systems	
Model #	**Description**
6193	55 Gallon Chip Vac System includes the Chip Vac, lever lock drum lid, shutoff valve, filter bag, 10' (3m) flexible vacuum hose (1-1/2"/38mm I.D.), chip wand, (2) extension wands, crevice tool, brush, skimmer tool (drum not included).
6193-30	30 Gallon Chip Vac System - same as Model 6193 except fits a 30 gallon drum (drum not included).
6193-5	5 Gallon Mini Chip Vac System - includes the Chip Vac (3/8 NPT), shutoff valve, filter bag, 5 gallon container with lid and lock ring, 10' (3m) flexible vacuum hose (1-1/2"/38mm I.D.), aluminum chip wand, (2) extension wands, crevice tool, brush, skimmer tool.
6293	55 Gallon Deluxe Chip Vac System - same as Model 6193 and adds drum dolly and tool holder (drum not included).
6293-30	30 Gallon Deluxe Chip Vac System - same as Model 6293 except fits 30 gallon drum (drum not included).
6293-5	5 Gallon Deluxe Chip Vac System - same as Model 6193-5 and adds drum dolly.
6393	55 Gallon Premium Chip Vac System - same as Model 6193 and adds a 55 gallon drum, drum dolly, an upgrade to static resistant hose, an upgrade to heavy duty aluminum tools, 20' (6.1m) air hose, tool holder and quick connects fittings.
6393-30	30 Gallon Premium Chip Vac System - same as Model 6393 except includes 30 gallon drum.
6393-110	110 Gallon Premium Chip Vac System - same as Model 6393 except includes a 110 gallon drum.
6093	Chip Vac Only - included in all 30 gallon through 110 gallon systems listed above.
6093-5	Mini Chip Vac Only - included with 6193-5 and 6293-5 5 gallon systems.

Accessories			
Model #	**Description**	**Model #**	**Description**
6804	Replacement Filter Bag	**9041-5**	5 Gallon Drum Dolly
901176	Magnetic Tool Holder	**9041-30**	30 Gallon Drum Dolly
901071	Heavy Duty Aluminum Tools plus Tool Holder	**9041**	55 Gallon Drum Dolly
6569-20	20' (6.1m) Flexible Vacuum Hose (1-1/2" / 38mm I.D.)	**9041-110**	110 Gallon Drum Dolly

Industrial Housekeeping

TOP PICK

Chip Vac

How The Chip Vac Works

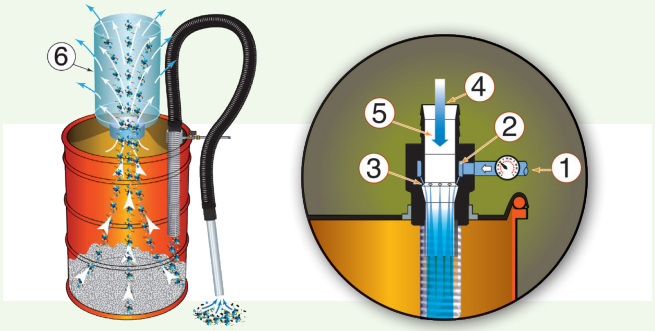

Compressed air, normally 80-100 PSIG (5.5 - 6.9 BAR), flows through the inlet (1) into an annular plenum chamber (2). It is then injected into the throat through directed nozzles (3). These jets of air create a vacuum at the intake (4) which draws material in, accelerates it through the unit (5), and directs it to the bottom of the drum. The airflow exhausts through the port in the drum lid. Airborne particles are trapped by the filter bag (6).

Warning: Do not use with combustible dust.

The Chip Vac System can be used with an open head steel, fiber or plastic drum that is in good condition (ANSI Standard #MH2-2004). To prevent material contamination, a poly drum liner can be inserted into the drum.



Deluxe and Premium Chip Vac Systems include a drum dolly.

Chip Vac System Specifications

Size	Pressure Supply		Air Consumption		INLET	Sound Level
	PSIG	BAR	SCFM	SLPM		
110, 55 & 30 Gallon	80	5.5	40	1,132	3/8 NPT	77 dBA
5 Gallon	80	5.5	33	934	3/8 NPT	

Air consumption has been minimized by using the appropriate amount of air required for vacuuming chips.



The Model 6193 Chip Vac System includes a vacuum hose, chip wand and plastic tools.



The Model 6193-5 Mini Chip Vac System includes a vacuum hose, 5 gallon drum, chip wand and plastic tools.



Premium Chip Vac Systems include the drum, drum dolly, an upgrade to static resistant hose, heavy duty aluminum tools, tool holder, air hose and quick connects fittings. (Model 6393 shown.)

Industrial Housekeeping

TOP PICK

Chip Vac Systems	
Model #	**Description**
6193	55 Gallon Chip Vac System includes the Chip Vac, lever lock drum lid, shutoff valve, filter bag, 10' (3m) flexible vacuum hose (1-1/2"/38mm I.D.), chip wand, (2) extension wands, crevice tool, brush, skimmer tool (drum not included).
6193-30	30 Gallon Chip Vac System - same as Model 6193 except fits a 30 gallon drum (drum not included).
6193-5	5 Gallon Mini Chip Vac System - includes the Chip Vac (3/8 NPT), shutoff valve, filter bag, 5 gallon container with lid and lock ring, 10' (3m) flexible vacuum hose (1-1/2"/38mm I.D.), aluminum chip wand, (2) extension wands, crevice tool, brush, skimmer tool.
6293	55 Gallon Deluxe Chip Vac System - same as Model 6193 and adds drum dolly and tool holder (drum not included).
6293-30	30 Gallon Deluxe Chip Vac System - same as Model 6293 except fits 30 gallon drum (drum not included).
6293-5	5 Gallon Deluxe Chip Vac System - same as Model 6193-5 and adds drum dolly.
6393	55 Gallon Premium Chip Vac System - same as Model 6193 and adds a 55 gallon drum, drum dolly, an upgrade to static resistant hose, an upgrade to heavy duty aluminum tools, 20' (6.1m) air hose, tool holder and quick connects fittings.
6393-30	30 Gallon Premium Chip Vac System - same as Model 6393 except includes 30 gallon drum.
6393-110	110 Gallon Premium Chip Vac System - same as Model 6393 except includes a 110 gallon drum.
6093	Chip Vac Only - included in all 30 gallon through 110 gallon systems listed above.
6093-5	Mini Chip Vac Only - included with 6193-5 and 6293-5 5 gallon systems.

Accessories			
Model #	**Description**	**Model #**	**Description**
6804	Replacement Filter Bag	**9041-5**	5 Gallon Drum Dolly
901176	Magnetic Tool Holder	**9041-30**	30 Gallon Drum Dolly
901071	Heavy Duty Aluminum Tools plus Tool Holder	**9041**	55 Gallon Drum Dolly
6569-20	20' (6.1m) Flexible Vacuum Hose (1-1/2" / 38mm I.D.)	**9041-110**	110 Gallon Drum Dolly

For Technical Assistance, Call an EXAIR Application Engineer 1-800-903-9247
Toll Free FAX (866) 329-3924 • E-mail: techelp@exair.com • www.exair.com

Heavy Duty Dry Vac

How The Heavy Duty Dry Vac Works

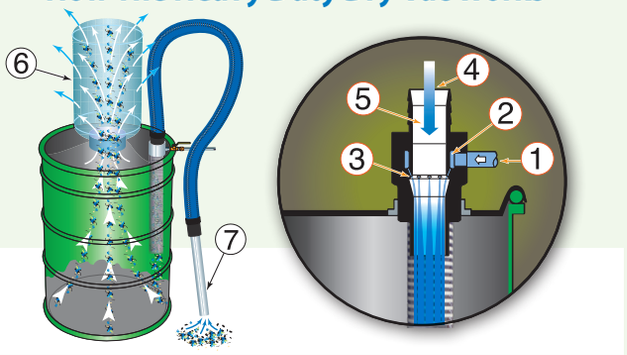

Compressed air, normally 80-100 PSIG (5.5 - 6.9 BAR), flows through the inlet (1) into an annular plenum chamber (2). It is then injected into the throat through directed nozzles (3). These jets of air create a vacuum at the intake (4) which draws material in, accelerates it through the unit (5), and directs it to the bottom of the drum. The airflow exhausts through the port in the drum lid. Airborne particles are trapped by the filter bag (6). The Heavy Duty Dry Vac unit (5) and vacuum tools (7) are built to withstand rugged use.

Warning: Do not use with combustible dust.

The Heavy Duty Dry Vac's lever lock drum lid fits any open top drum. Moving it from one drum to another can be done quickly, making it easy to keep different materials separate for recycling. All materials are vacuumed directly into the drum, eliminating the heavy lifting that is common with electrically powered vacuums. The Heavy Duty Dry Vac can be used with an open head steel, fiber or plastic drum that is in good condition (ANSI Standard #MH2-2004). To prevent material contamination, a poly drum liner can be inserted into the drum.

Heavy Duty Dry Vac System Specifications

Model	Pressure Supply		Air Consumption		INLET	Sound Level
	PSIG	BAR	SCFM	SLPM		
ALL	80	5.5	68	1,924	1/2 NPT	82 dBA



The Model 6197 Heavy Duty Dry Vac System includes 10' (3m) static resistant hose, 20' (6.1m) compressed air hose, filter bag, aluminum chip wand, shutoff valve and gauge.



The Model 6297 Deluxe Heavy Duty Dry Vac System comes complete with a 10' (3m) static resistant hose, 20' (6.1m) compressed air hose, filter bag, shutoff valve, gauge, heavy duty tools, tool holder and drum dolly.

Premium Heavy Duty Dry Vac Systems are the same as Model 6297 and add either a 30, 55 or 110 gallon drum.

Heavy Duty Dry Vac Systems

Model #	Description
6197	55 Gallon Heavy Duty Dry Vac System includes the Heavy Duty Dry Vac, lever lock drum lid, shutoff valve, filter bag, 10' (3m) polyethylene static resistant hose (1-1/2"/38mm I.D.), hose hanger, 1/2 NPT quick connect couplings, 20' (6.1m) air hose with swivel fitting, pressure gauge, and aluminum chip wand (drum not included).
6197-30	30 Gallon Heavy Duty Dry Vac System - same as the Model 6197 except fits a 30 gallon drum (drum not included).
6297 (TOP PICK)	55 Gallon Deluxe Heavy Duty Dry Vac System- same as Model 6197 plus drum dolly and heavy duty aluminium tools. Additional tools include 2 piece double bend wand, 12" (305mm) floor tool, 11" (279mm) crevice tool, 24" (610mm) crevice tool, skimmer tool with detachable brush, tool holder, and a 3-1/2" (89mm) diameter dust brush with conductive bristles (drum not included).
6297-30	30 Gallon Deluxe Heavy Duty Dry Vac System - same as the Model 6297 except fits a 30 gallon drum (drum not included).
6397	55 Gallon Premium Heavy Duty Dry Vac System - same as the Model 6297 and adds a 55 gallon drum.
6397-30	30 Gallon Premium Heavy Duty Dry Vac System - same as the Model 6397 except includes a 30 gallon drum.
6397-110	110 Gallon Premium Heavy Duty Dry Vac System - same as the Model 6397 except includes a 110 gallon drum.
6097	Heavy Duty Dry Vac only - included in all systems listed above.

Accessories

Model #	Description	Model #	Description
6804	Replacement Filter Bag	9041-30	30 Gallon Drum Dolly
901176	Magnetic Tool Holder	9041-110	110 Gallon Drum Dolly
901071	Heavy Duty Aluminum Tools plus Tool Holder	901069	55 Gallon Drum Only
6580-20	20' (6.1m) Static Resistant Vacuum Hose	901069-30	30 Gallon Drum Only
9041	55 Gallon Drum Dolly	901069-110	110 Gallon Drum Only

EXAIR_Cat36_25_FROMINDESIGN.indb 198 12/20/24 3:48 PM

An INTELLIGENT COMPRESSED AIR® Product

Heavy Duty HEPA Vac™

A rugged HEPA quality vacuum! High capacity cleaning for dusty environments!



What Is The Heavy Duty HEPA Vac?

EXAIR's compressed air operated Heavy Duty HEPA Vac attaches to an ordinary 30, 55, or 110 gallon open top drum to turn it into a powerful, HEPA (High Efficiency Particulate Air) quality, industrial vacuum cleaner. Like the Heavy Duty Dry Vac, it's powerfully designed to move more material with less wear. In addition, the Heavy Duty HEPA Vac has been engineered to filter contaminants to HEPA requirements in dusty environments requiring frequent cleaning.

Why The Heavy Duty HEPA Vac?



Engineered for dusty environments that require regular cleaning, the HEPA filter is designed with high capacity in mind. Ordinary vacuums can clog up quickly in environments with an abundance of dust or particulates. An economical, easily maintained pre-filter stops larger particles of debris while the HEPA filter handles smaller matter. All of EXAIR's filters are 100% tested in strict accordance to IEST-RP-CC-007 for minimum 99.97% Filtration at the 0.3 micron level to meet HEPA standards. An optional filter protector is available to extend the life of the HEPA filter.

The Heavy Duty HEPA Vac does not use electricity and has no moving parts, assuring maintenance free operation. This eliminates the risk of electric shock often associated with electric shop vacs. Static resistant hose prevents painful shocks when vacuuming dry, dusty materials.



A clogged filtering system for a buffing booth is quickly cleaned and put back into service using the Heavy Duty HEPA Vac.



A technician uses a Heavy Duty HEPA Vac to perform scheduled maintenance on a pulverizer.

Applications

- Critical dust removal
- Clean up around grit and dust producing equipment
- Abrasive media
- Shop floors
- Drywall refinishing
- Industrial contaminants
- Mold and allergen removal
- Trapping dust and airborne irritants
- Eliminate exhaust debris

Advantages

- For frequent use in dusty environments
- Hardened construction resists wear
- No moving parts - maintenance free
- No electricity
- Static resistant hose
- Dust free operation
- Reduces exposure to airborne particulates
- Includes accessories
- Quiet

EXAIR_Cat36_25_FROMINDESIGN.indb 199 12/20/24 3:48 PM

Heavy Duty HEPA Vac

How The Heavy Duty HEPA Vac Works

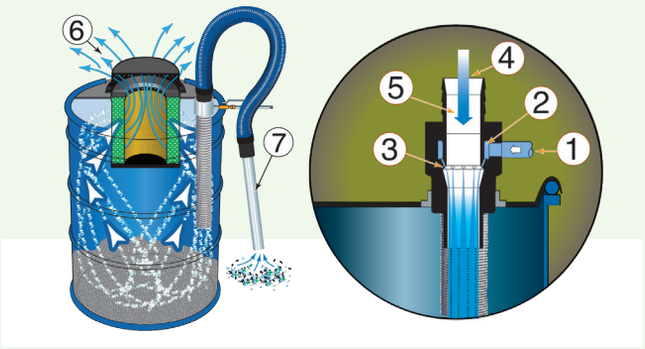

Compressed air, normally 80-100 PSIG (5.5 - 6.9 BAR), flows through the inlet (1) into an annular plenum chamber (2). It is then injected into the throat through directed nozzles (3). These jets of air create a vacuum at the intake (4) which draws material in, accelerates it through the unit (5), and directs it to the bottom of the drum. The airflow passes first through the pre-filter and then through the 0.3 micron HEPA filter, trapping airborne particles. It then exhausts through the vent in the drum lid (6). The Heavy Duty Dry Vac unit (5) and vacuum tools (7) are built to resist wear.

Warning: Do not use with combustible dust.

The Heavy Duty HEPA Vac's lever lock drum lid fits any open top 30, 55 or 110 gallon drum. Moving it from one drum to another can be done quickly, making it easy to keep different materials separate for recycling. All materials are vacuumed directly into the drum, eliminating the heavy lifting that is common with electrically powered vacuums. The Heavy Duty HEPA Vac can be used with an open head steel, fiber or plastic drum that is in good condition (ANSI Standard #MH2-2004). To prevent material contamination, a poly drum liner can be inserted into the drum.

Heavy Duty HEPA Vac System Specifications

Model	Pressure Supply		Air Consumption		INLET	Sound Level
	PSIG	BAR	SCFM	SLPM		
ALL	80	5.5	68	1,924	3/8 NPT	82 dBA



The Model 6199 Heavy Duty HEPA Vac System includes HEPA filter, pre-filter, 10' (3m) static resistant hose, 20' (6.1m) compressed air hose, aluminum chip wand, shutoff valve and gauge.



The Model 6299 Deluxe Heavy Duty HEPA Vac System comes complete with HEPA filter, pre-filter, 10' (3m) static resistant hose, 20' (6.1m) compressed air hose, shutoff valve, gauge, heavy duty tools, tool holder and drum dolly.

Premium Heavy Duty HEPA Vac Systems are the same as Model 6299 and add either a 30, 55 or 110 gallon drum.

Built to Last 5 yr. WARRANTY
See our Terms & Conditions

Heavy Duty HEPA Vac Systems	
Model #	**Description**
6199	55 Gallon Heavy Duty HEPA Vac System includes Heavy Duty Dry Vac, lever lock drum lid, shutoff valve, pre-filter, HEPA filter, 10' (3m) polyethylene static resistant hose (1-1/2"/38mm I.D.), hose hanger, 1/2 NPT quick connects coupling, 20' (6.1m) air hose with swivel fitting, pressure gauge, and aluminum chip wand (drum not included)
6199-30	30 Gallon Heavy Duty HEPA Vac System – same as Model 6199 except fits a 30 gallon drum (drum not included).
6299	55 Gallon Deluxe Heavy Duty HEPA Vac System- same as Model 6199 plus drum dolly and heavy duty aluminium tools. Additional tools include 2 piece double bend wand, 12" (305mm) floor tool, 11" (279mm) crevice tool, 24" (610mm) crevice tool, skimmer tool with detachable brush, tool holder, and a 3-1/2" (89mm) diameter dust brush with conductive bristles (drum not included).
6299-30	30 Gallon Deluxe Heavy Duty HEPA Vac System – same as Model 6299 except fits a 30 gallon drum (drum not included).
6399	55 Gallon Premium Heavy Duty HEPA Vac System - same as the Model 6299 and adds a 55 gallon drum.
6399-30	30 Gallon Premium Heavy Duty HEPA Vac System – same as Model 6399 except includes a 30 gallon drum.
6399-110	110 Gallon Premium Heavy Duty HEPA Vac System - same as Model 6399 except includes a 110 gallon drum.
6097	Heavy Duty Dry Vac only - included in all systems listed above.

Accessories			
Model #	**Description**	**Model #**	**Description**
901356	Replacement Pre-filter	**9041**	55 Gallon Drum Dolly
901357	Replacement HEPA Filter	**9041-30**	30 Gallon Drum Dolly
901373	Optional Filter Protector	**901176**	Magnetic Tool Holder
901071	Heavy Duty Aluminum Tools plus Tool Holder	**901069**	55 Gallon Drum Only
6580-20	20' (6.1m) Static Resistant Vacuum Hose	**901069-30**	30 Gallon Drum Only

EXAIR_Cat36_25_FROMINDESIGN.indb 200 12/20/24 3:48 PM

Vac-u-Gun™

Vacuum, blow and transfer with no moving parts!

Rugged die cast construction for industrial use!



What Is The Vac-u-Gun?



A low cost solution to a wide variety of industrial housekeeping problems. The Vac-u-Gun is a vacuum gun, a blow gun and a transfer tool all in one. Lightweight and easy to use, the Vac-u-Gun has durable die cast construction with no moving parts to wear out.

Why The Vac-u-Gun?

The Vac-u-Gun uses less compressed air than an ordinary blow gun. It injects a small amount of compressed air through directed nozzles to produce a vacuum on one end and a high output flow on the other. The amplified output flow is 12 times the air consumption rate.

The Vac-u-Gun offers a more efficient way to blowoff, cool, dry and clean. In vacuum mode, work surfaces can be easily cleaned by vacuuming the debris away instead of blowing it off the surface only to sweep it up later. In blow mode, more surface area can be cleared in less time compared to ordinary air guns. Transferring materials over long distance is also possible using the smooth bore vacuum hose. Three Vac-u-Gun Systems are available.



Model 6192 Vac-u-Gun Collection System vacuums absorbent and chips.

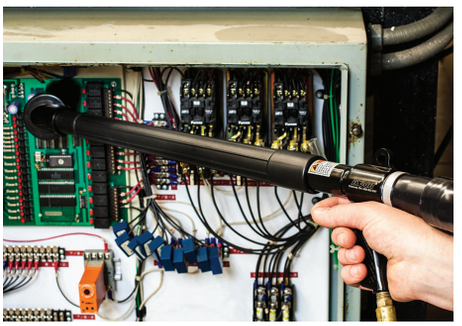

Model 6292 Vac-u-Gun Transfer System carries dust away from sensitive electronic controls.



Model 6392 Vac-u-Gun All Purpose System removes plastic shavings from a saw.

Applications

- Vacuum shavings
- Vacuum absorbent
- Vacuum sawdust
- Vacuum spills
- Transfer small parts
- Transfer pellets
- Transfer trim
- Blow chips
- Blow water
- Blow coolant
- Blow scrap

Advantages

- Low cost
- No moving parts – maintenance free
- Durable – die cast construction
- Switch from vacuum to blow mode in seconds
- Safe – no electricity
- Meets OSHA pressure requirements
- Vacuum or blowoff
- Lightweight and portable
- Versatile
- Quiet

EXAIR_Cat36_25_FROMINDESIGN.indb 201 12/20/24 3:48 PM

Vac-u-Gun

Vac-u-Gun Specifications

Pressure Supply		Air Consumption		Vacuum		Force			Sound Level
PSIG	BAR	SCFM	SLPM	"H_2O	kPa	Ozs	Grams	Inlet	84 dBA*
80	5.5	13	368	-29.5	-7	9	255	1/4 NPT	

* Tested in "vacuum" mode with bag attached.

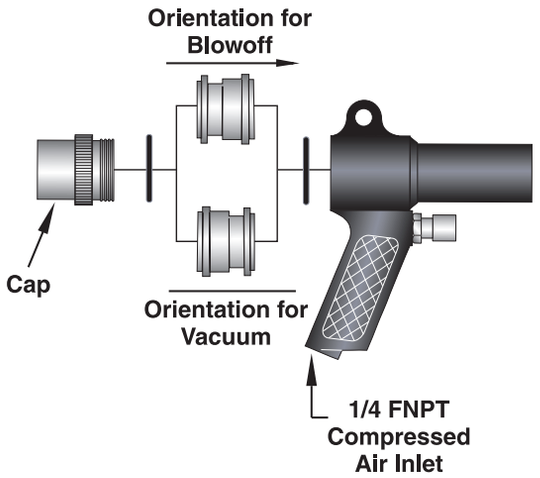

Reverse the direction of the nozzle insert to change from vacuum to blowoff.

Versatile

In seconds, the Vac-u-Gun can be transformed from a powerful vacuum gun into an efficient blow gun or into a transfer tool for lightweight materials. Each Vac-u-Gun System comes complete with a set of attachments to suit numerous industrial applications.

Warning: Do not use with combustible dust.



In blow mode, the Vac-u-Gun consumes less air than ordinary blow guns.

Vac-u-Gun Systems



Model 6192 Collection System

includes Vac-u-Gun, reusable bag, brush, crevice tool, skimmer tool and (2) extension wands.



Model 6292 Transfer System

includes Vac-u-Gun, 10' (3m) vacuum hose, brush, crevice tool, skimmer tool and (2) extension wands.



Model 6392 All Purpose System

includes Vac-u-Gun, reusable bag, 10' (3m) vacuum hose, brush, crevice tool, skimmer tool and (2) extension wands.

Accessories	
Model #	**Description**
9001	Auto Drain Filter Separator, 3/8 NPT, 65 SCFM (1,841 SLPM)
9005	Oil Removal Filter, 3/8 NPT, 15-37 SCFM (425-1,048 SLPM)
6092	Vac-u-Gun Only - included with all systems shown above.

Order Direct
We Ship From Stock

EXAIR_Cat36_25_FROMINDESIGN.indb 202 12/20/24 3:48 PM

Vortex Tubes

Cold air to -50°F (-46°C) from your compressed air supply — with no moving parts!



What Is A Vortex Tube?

A low cost, reliable, maintenance free solution to a variety of industrial spot cooling problems. Using an ordinary supply of compressed air as a power source, vortex tubes create two streams of air, one hot and one cold, **with no moving parts.** Vortex tubes can produce:

- Temperatures from -50° to +260°F (-46° to +127°C)
- Flow rates from 1 to 150 SCFM (28 to 4,248 SLPM)
- Refrigeration up to 10,200 Btu/hr. (2,989 Watts)

Temperatures, flows and cooling power are adjustable over a wide range using the control valve on the hot end exhaust.

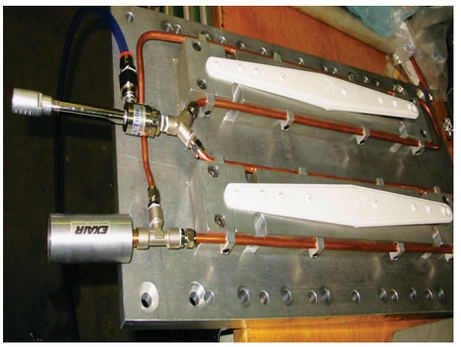

A Model 3225 Vortex Tube keeps plastic dishwasher arms cool during ultrasonic welding.

Why EXAIR Vortex Tubes?

EXAIR Vortex Tubes are constructed of **stainless steel.** The wear resistance of stainless steel, as well as its resistance to corrosion and oxidation, assures that EXAIR Vortex Tubes will provide years of reliable, maintenance-free operation.



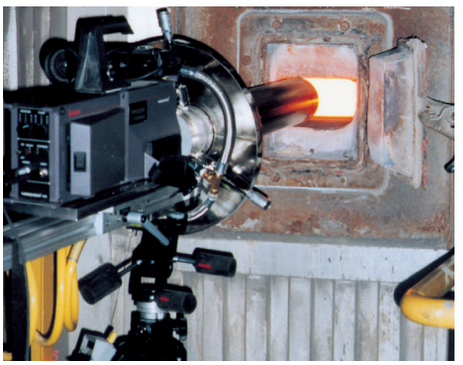

Special high temperature vortex tubes keep a boroscope lens cool while inserted into a 1200°F (650°C) boiler porthole.





A 1/4 ton of refrigeration in the palm of your hand!

Applications

- Cooling electronic controls
- Cooling machining operations
- Cooling CCTV cameras
- Setting hot melts
- Cooling soldered parts
- Cooling gas samples
- Electronic component cooling
- Cooling heat seals
- Cooling environmental chambers

Advantages

- No moving parts
- No electricity or chemicals
- Small, lightweight
- Low cost
- Maintenance free
- Instant cold air
- Durable - stainless steel
- Adjustable temperature
- Interchangeable generators

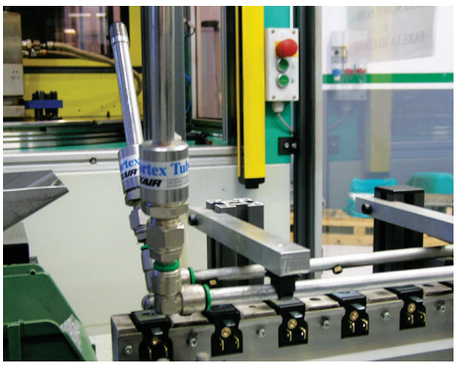

A pair of medium vortex tubes cool a solenoid coil after a welding operation.

EXAIR_Cat36_25_FROMINDESIGN.indb 203 12/20/24 3:48 PM

Vortex Tubes

How A Vortex Tube Works

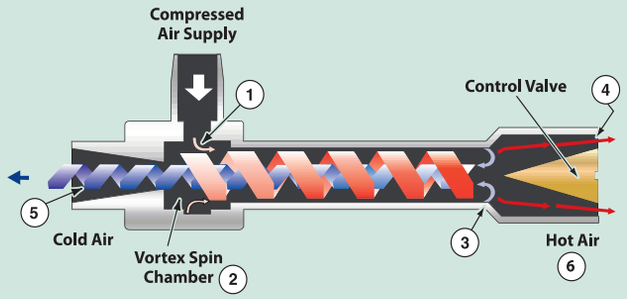

Compressed air, normally 80-100 PSIG (5.5 - 6.9 BAR), is ejected tangentially (1) through a generator into the vortex spin chamber (2). At up to 1,000,000 RPM, this air stream revolves toward the hot end (3) where some escapes through the control valve (4). The remaining air, still spinning, is forced back through the center of this outer vortex. The inner stream gives off kinetic energy in the form of heat to the outer stream and exits the vortex tube as cold air (5). The outer stream exits the opposite end as hot air (6). There is a detailed discussion of vortex tube history and theory later on page 209 in this section.

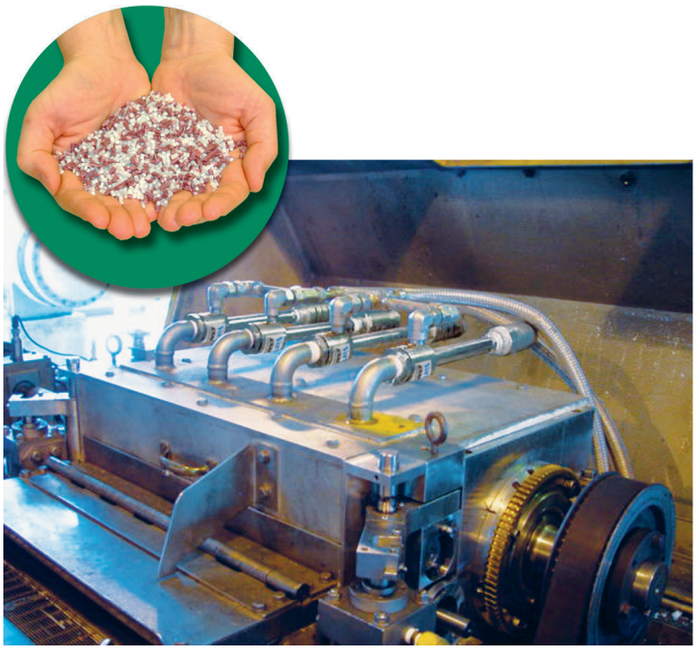

(4) Model 3250 Vortex Tubes cool the cutting knives in this pelletizer to prevent irregular shapes.

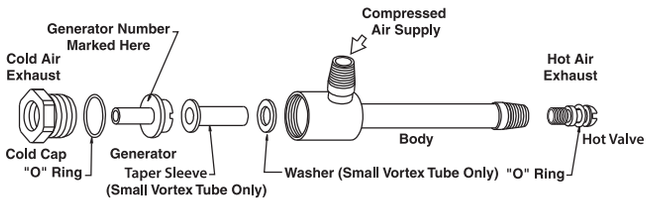

Controlling Temperature And Flow In A Vortex Tube

Cold airflow and temperature are easily controlled by adjusting the slotted valve in the hot air outlet. **Opening the valve reduces the cold airflow and the cold air temperature. Closing the valve increases the cold airflow and the cold air temperature.** The percentage of air directed to the cold outlet of the vortex tube is called the "cold fraction". In most applications, a cold fraction of 80% produces a combination of cold flow rate and temperature drop that maximizes refrigeration, or Btu/hr. (Watts), output of a vortex tube. While low cold fractions (less than 50%) produce lowest temperatures, cold airflow volume is sacrificed to achieve them.

Most industrial applications (i.e., process cooling, part cooling, chamber cooling) require maximum refrigeration and utilize the 32XX series Vortex Tube. Certain "cryogenic" applications (i.e., cooling lab samples, circuit testing) are best served by the 34XX series Vortex Tube.

Setting a vortex tube is easy. Simply insert a thermometer in the cold air exhaust and set the temperature by adjusting the valve at the hot end. **Maximum refrigeration (80% cold fraction) is achieved when cold air temperature is 50°F (28°C) below compressed air temperature.**

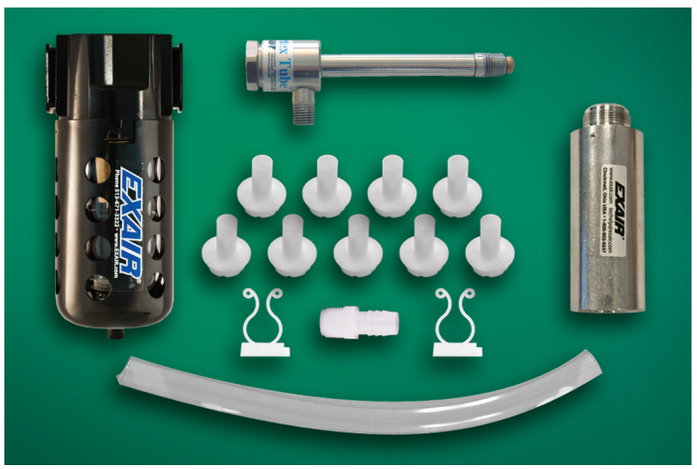

Model 3930 EXAIR Cooling Kit

If you are unsure of your flow and temperature requirements, EXAIR recommends the purchase of an **EXAIR Cooling Kit**. It contains a vortex tube, cold air muffler, compressed air filter and all generators required to experiment with the full range of airflows and temperatures.

EXAIR_Cat36_25_FROMINDESIGN.indb 204 12/20/24 3:48 PM

Selecting The Right Vortex Tube

EXAIR Vortex Tubes are available in three sizes. Each size can produce a number of flow rates, as determined by a small internal part called a **generator.** If Btu/hr. (Watts) requirements, or flow and temperature requirements are known, simply select the appropriate vortex tube according to the specification information shown below or the performance tables shown on the following page. Keep in mind that the **vortex generators are interchangeable.** If, for example, a Model 3215 Vortex Tube does not provide sufficient cooling, you need only change generators within the vortex tube to upgrade the flow rate from 15 to 25, 30 or 40 SCFM (425 to 708, 850 or 1,133 SLPM). Generator part numbers are shown in the "Accessories" listing on page 210.

Vortex Tube Dimensions

Small

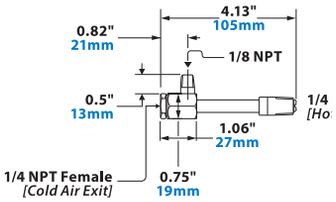

With Mufflers

DOWNLOAD drawings at EXAIR.com

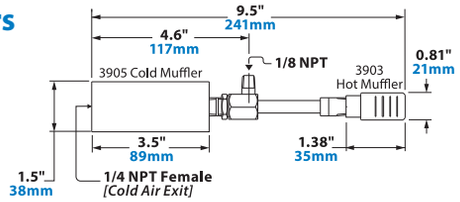

Medium

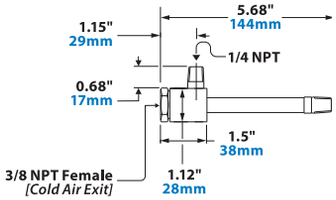

With Mufflers

DOWNLOAD drawings at EXAIR.com

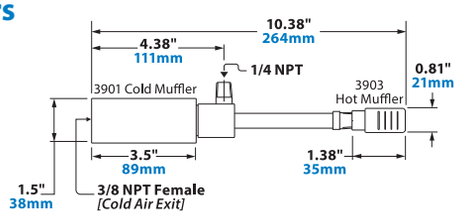

Large

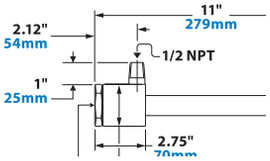

With Mufflers

DOWNLOAD drawings at EXAIR.com

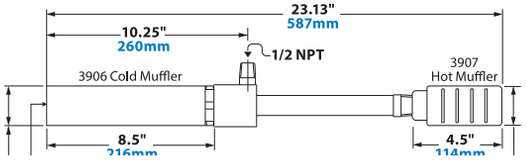

Vortex Tube Specifications

32XX series Vortex Tubes optimize temperature drop and airflow to **produce maximum cooling power or Btu/hr. (Watts).** Specify 32XX series Vortex Tubes for most general cooling applications.

34XX series Vortex Tubes provide **lowest cold air temperatures, but at low cold airflow (when less than a 50% cold fraction is used).** Specify 34XX series Vortex Tubes only where temperatures below 0°F (-18°C) are desired.

32XX Series Vortex Tube Specifications							34XX Series Vortex Tube Specifications						
Model	SCFM*	SLPM*	Btu/hr.**	Watts**	SIZE	dBA***	Model	SCFM*	SLPM*	Btu/hr.**	Watts**	SIZE	dBA***
3202	2	57	135	40	Small	68	**3402**	2	57	-----	-----	Small	67
3204	4	113	275	80	Small	70	**3404**	4	113	-----	-----	Small	69
3208	8	227	550	162	Small	76	**3408**	8	227	-----	-----	Small	75
3210	10	283	650	191	Medium	80	**3410**	10	283	-----	-----	Medium	78
3215	15	425	1,000	293	Medium	81	**3415**	15	425	-----	-----	Medium	80
3225	25	708	1,700	498	Medium	82	**3425**	25	708	-----	-----	Medium	82
3230	30	850	2,000	586	Medium	84	**3430**	30	850	-----	-----	Medium	84
3240	40	1,133	2,800	821	Medium	88	**3440**	40	1,133	-----	-----	Medium	87
3250	50	1,416	3,400	997	Large	94	**3450**	50	1,416	-----	-----	Large	93
3275	75	2,124	5,100	1,494	Large	96	**3475**	75	2,124	-----	-----	Large	96
3298	100	2,832	6,800	1,993	Large	96	**3498**	100	2,832	-----	-----	Large	96
3299	150	4,248	10,200	2,989	Large	97	**3499**	150	4,248	-----	-----	Large	96

* SCFM (SLPM) at 100 PSIG (6.9 BAR) Inlet Pressure
** Btu/hr. (Watts) Cooling Capacity at 100 PSIG (6.9 BAR)
*** Noise levels taken with hot and cold mufflers installed.

* SCFM (SLPM) at 100 PSIG (6.9 BAR) Inlet Pressure
** Not Applicable. 34XX series Vortex Tubes are not normally used in air conditioning applications.
*** Noise levels taken with hot and cold mufflers installed.

EXAIR_Cat36_25_FROMINDESIGN.indb 205 12/20/24 3:48 PM

Vortex Tube Performance

The **Vortex Tube Performance Tables** below give approximate temperature drops (and rises) **from inlet air temperature** produced by a vortex tube set at each cold fraction. Assuming no fluctuation of inlet temperature or pressure, a vortex tube will reliably maintain temperature within ±1°F.

Pressure Supply	Cold Fraction %						
PSIG	20	30	40	50	60	70	80
20	62	60	56	51	44	36	28
	15	25	36	50	64	83	107
40	88	85	80	73	63	52	38
	21	35	52	71	92	117	147
60	104	100	93	84	73	60	46
	24	40	59	80	104	132	166
80	115	110	102	92	80	66	50
	25	43	63	86	113	143	180
100	123	118	110	100	86	71	54
	26	45	67	90	119	151	191
120	129	124	116	104	91	74	55
	26	46	69	94	123	156	195

Numbers in **shaded** area give temperature drop of cold air, °F.
Numbers in **white** area give temperature rise of hot air, °F.

Pressure Supply	Cold Fraction % (METRIC)						
BAR	20	30	40	50	60	70	80
1.4	34.4	33.3	31.1	28.3	24.4	20.0	15.6
	8.3	13.9	20.0	28.3	35.6	46.1	59.4
2	40.9	39.6	37.1	33.8	29.2	24.0	18.1
	9.8	16.4	24.0	33.3	42.6	54.6	69.5
3	50.4	48.7	45.7	41.6	36.0	29.7	21.9
	12.0	19.9	29.6	40.3	52.3	66.5	83.5
4	56.9	54.7	50.9	46.1	40.0	32.9	25.1
	13.2	21.9	32.4	43.9	57.1	72.5	91.2
5	61.6	59.0	54.8	49.4	43.0	35.4	26.9
	13.7	23.3	34.2	46.5	60.9	77.2	97.1
6	65.4	62.7	58.2	52.7	45.6	37.6	28.6
	14.1	24.3	35.8	48.6	63.9	81.0	102.1
7	68.6	65.8	61.4	55.7	48.0	39.6	30.0
	14.4	25.1	37.3	50.2	66.3	84.2	106.3
8	71.1	68.2	63.8	57.3	50.0	40.8	30.4
	14.4	25.4	38.1	51.8	67.9	86.1	107.9

Numbers in **shaded** area give temperature drop of cold air, °C.
Numbers in **white** area give temperature rise of hot air, °C

Back Pressure: The performance of a vortex tube deteriorates with back pressure on the cold air exhaust. Low back pressure, up to 2 PSIG (.1 BAR), will not change performance. 5 PSIG (.3 BAR) will change performance by approximately 5°F (2.8°C).

Filtration: The use of clean air is essential, and filtration of 25 microns or less is recommended. EXAIR filters contain a 5 micron element and are properly sized for flow.

Inlet Air Temperature: A vortex tube provides a temperature drop from supply air temperature (*see Performance Charts above*). Elevated inlet temperatures will produce a corresponding rise in cold air temperatures.

Noise Muffling: EXAIR offers mufflers for both the hot and cold air discharge. Normally, muffling is not required if the cold air is ducted.

Regulation: For best performance, use line pressures of 80 to 110 PSIG (5.5 to 7.6 BAR). Maximum pressure rating is 250 PSIG (17.2 BAR), minimum 20 PSIG (1.4 BAR).

EXAIR Products Using Vortex Tubes

Over the years, the basic vortex tube has been used in virtually hundreds of industrial cooling applications. A few have become so popular as to warrant the development of an "applied product" designed to suit the specific application. These products include the Adjustable Spot Cooler, Mini Cooler, Cold Gun and Cabinet Coolers that can be found in this catalog.



High Temperatures

High temperature vortex tubes for ambient temperatures up to 200°F (93°C) are available. Standard vortex tubes are for ambient temperatures up to 125°F (52°C). Contact an Application Engineer at 1-800-903-9247 for details.

Preset Vortex Tubes

EXAIR can provide vortex tubes preset to any combination of flow and temperature desired. To prevent tampering with the desired setting, a drilled orifice that replaces the adjustable hot valve is available. For more information, please contact an Application Engineer.

EXAIR_Cat36_25_FROMINDESIGN.indb 206 12/20/24 3:48 PM

Cooling Vacuum Formed Parts

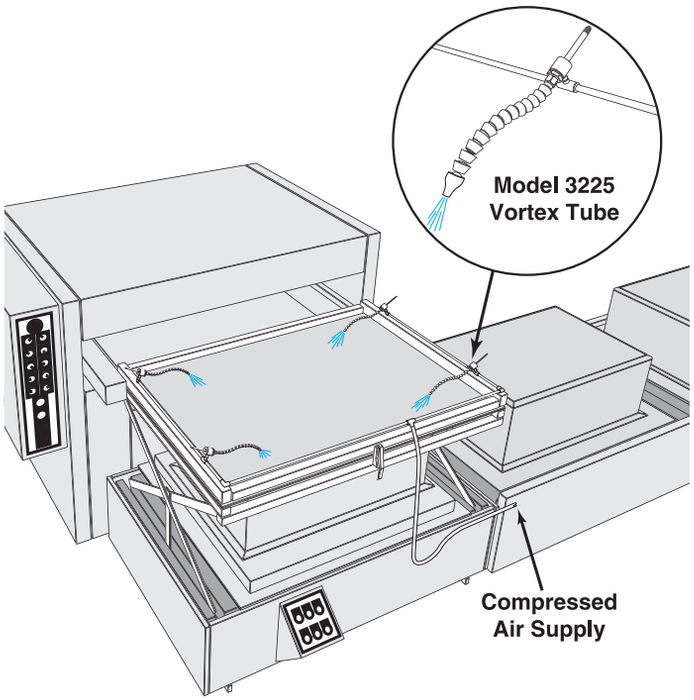

The Problem: A manufacturer of major appliances vacuum forms the plastic interior shell of refrigerators. The deep draw of the plastic and complex geometry left the four corners unacceptably thin. The corners would tear during assembly or bulge when insulation was inserted between the shell and exterior housing, resulting in a high rejection rate.

The Solution: (4) Model 3225 Vortex Tubes were positioned to cool the critical corner areas just prior to forming the plastic sheet. By cooling these areas, less stretching of the plastic occurred which resulted in thicker corners.

Comment: Rejected parts become very costly, especially when expensive materials and slow process times are involved. The cold air from the vortex tube is just the solution for big problems like this one. It can supply "instant" cold air down to -50°F (-46°C) from an ordinary compressed air supply. Along with cooling other vacuum formed parts such as spas, bathtubs, tote pans and waste cans, it is ideal for cooling hot melts, ultrasonic welders, environmental chambers, etc.

This is an ideal application for EXAIR's EFC, an electronic flow control for compressed air, shown on page 7. It reduces air consumption by turning on the compressed air for a preset length of time, when sensing the plastic sheet is in position.

Cooling An Ultrasonic Weld

The Problem: A manufacturer of toothpaste seals the ends of plastic tubes with an ultrasonic welder prior to filling. As heat built up at the sealing jaw of the welder, release of the tubes was delayed. Tubes that were too hot would not seal resulting in a high rate of rejection.

The Solution: A Model 3215 Vortex Tube was used to direct cold air at the jaw of the welder. The cooling was transferred through the metal jaw to the tube seam while in the clamped position. **Process time was reduced and rejected tubes were eliminated.**

Comment: It amazes most people that the cooling from a small vortex tube can dramatically improve quality and throughput. The vortex tube is the low cost solution for cooling parts, chambers, heat seals and various processes. They're easy to use, can be adjusted to produce cold air down to -50°F (-46°C) and have no moving parts to wear out.

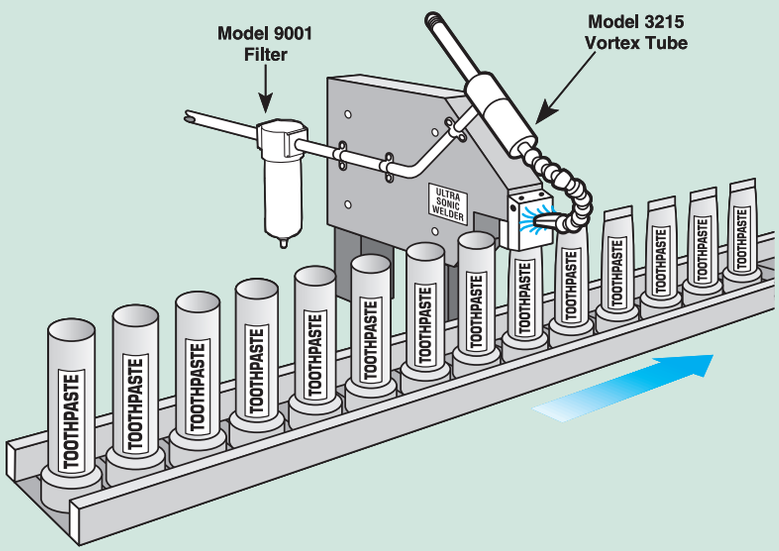

EXAIR_Cat36_25_FROMINDESIGN.indb 207 12/20/24 3:48 PM

Cooling Blow Molded Fuel Tanks

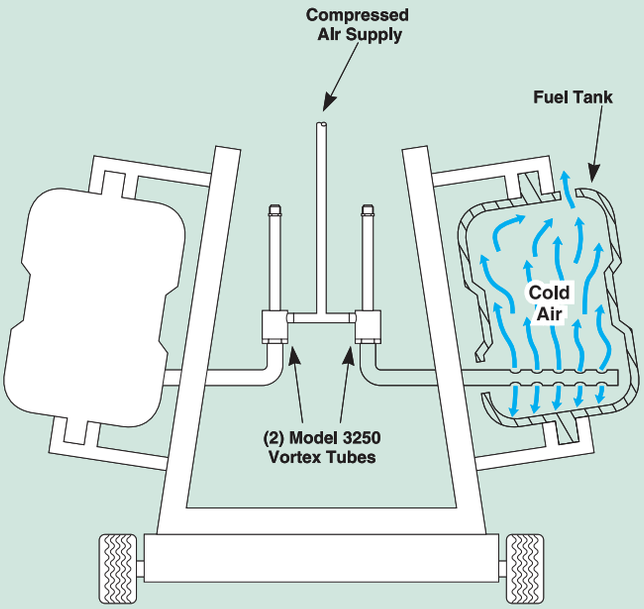

The Problem: Automobile fuel tanks are blow molded, then clamped to a fixture to prevent distortion during the cooling cycle. The cooling time of over 3 minutes required for each tank created a bottleneck in the production process.

The Solution: (2) Model 3250 Vortex Tubes were mounted to the cooling rack and connected to a compressed air line. Cold air produced by the vortex tubes was circulated inside the fuel tanks. **Cooling time was reduced from three minutes to two minutes for each tank, improving productivity by 33%.**

Comment: It's hard to imagine an application better suited to vortex cooling than this one. The vortex tubes' small size and light weight simplified mounting to the cooling rack. No moving parts assured reliability and maintenance-free operation in a hostile environment. Finally, the cold airstream was easily channeled to the fuel tank via the threaded cold air outlet. When the cooling problem includes the need for simplicity, reliability and compact design, a vortex tube is very often the best choice.

Cooling Small Parts After Brazing

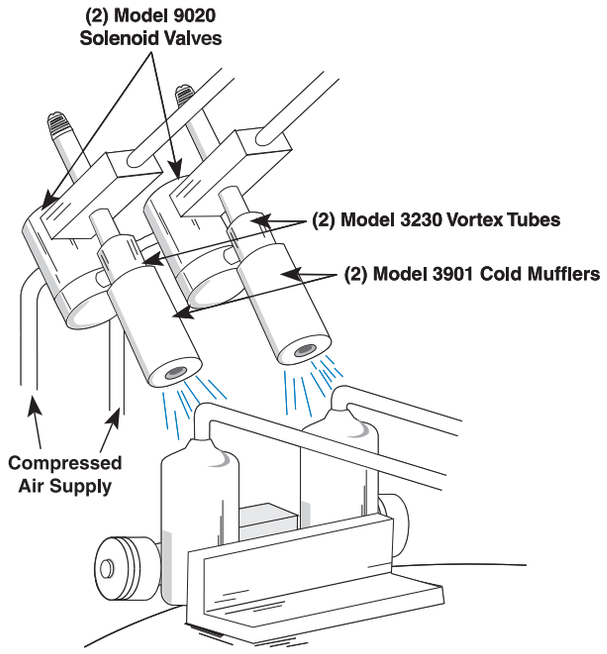

The Problem: Air conditioner parts assembled on an automatic brazing machine must be cooled to handling temperature prior to removal. The machine was capable of brazing up to four hundred pieces per hour. However, the time required for the parts to cool severely limited the production rate. Water cooling was unacceptable from the standpoint of both housekeeping and part contamination.

The Solution: (2) Model 3230 Vortex Tubes (with cold air mufflers installed) **were used to blow cold air on the parts after the brazing cycle.** The vortex tubes were set at an 80% cold airflow (cold fraction) to produce maximum refrigeration. **The parts were cooled from a brazing temperature of 1,450°F (788°C) to a handling temperature of 120°F (49°C) within 20 seconds,** allowing the machine to operate at its **maximum production rate.**

Comment: Compared to conventional refrigeration or water cooling, vortex tubes offer a number of advantages: low cost, compact design, inherent reliability and cleanliness. These attributes make vortex tubes the cost effective choice for many small part cooling operations.

EXAIR_Cat36_25_FROMINDESIGN.indb 208 12/20/24 3:48 PM



A Phenomenon of Physics

The two questions we're most often asked about the vortex tube are, "How long has it been around?" and "How does the thing work?". Following is a brief history and theory of the vortex tube.

The vortex tube was invented quite by accident in 1928 George Ranque, a French physics student, was experimenting with a vortex-type pump he had developed when he noticed warm air exhausting from one end, and cold air from the other. Ranque soon forgot about his pump and started a small firm to exploit the commercial potential for this strange device that produced hot and cold air with no moving parts. However, it soon failed and the vortex tube slipped into obscurity until 1945 when Rudolph Hilsch, a German physicist, published a widely read scientific paper on the device.

Much earlier, the great nineteenth century physicist, James Clerk Maxwell, postulated that since heat involves the movement of molecules, we might someday be able to get hot and cold air from the same device with the help of a "friendly little demon" who would sort out and separate the hot and cold molecules of air.

Thus, the vortex tube has been variously known as the ***"Ranque Vortex Tube",*** the ***"Hilsch Tube",*** the ***"Ranque-Hilsch Tube",*** and ***"Maxwell's Demon".*** By any name, it has in recent years gained acceptance as a simple, reliable and low cost answer to a wide variety of industrial spot cooling problems.

A vortex tube uses compressed air as a power source, has no moving parts, and produces hot air from one end and cold air from the other. The volume and temperature of these two airstreams are adjustable with a valve built into the hot air exhaust. Temperatures as low as -50°F (-46°C) and as high as 260°F (127°C) are possible.

Theories abound regarding the dynamics of a vortex tube. Here is one widely accepted explanation of the phenomenon:

Compressed air is supplied to the vortex tube and passes through nozzles that are tangential to an internal counter-bore. These nozzles set the air in a vortex motion. This spinning stream of air turns 90° and passes down the hot tube in the form of a spinning shell, similar to a tornado. A valve at one end of the tube allows some of the warmed air to escape. What does not escape, heads back down the tube as a second vortex inside the low-pressure area of the larger vortex. This inner vortex loses heat and exhausts through the other end as cold air.

While one airstream moves up the tube and the other down it, both rotate in the same direction at the same angular velocity. That is, a particle in the inner stream completes one rotation in the same amount of time as a particle in the outer stream. However, because of the principle of conservation of angular momentum, the rotational speed of the smaller vortex might be expected to increase. (The conservation principle is demonstrated by spinning skaters who can slow or speed up their spin by extending or drawing in their arms.) But in the vortex tube, the speed of the inner vortex remains the same. Angular momentum has been lost from the inner vortex. The energy that is lost shows up as heat in the outer vortex. Thus the outer vortex becomes warm, and the inner vortex is cooled.

EXAIR_Cat36_25_FROMINDESIGN.indb 209 12/20/24 3:48 PM

Vortex Tubes

EXAIR Cooling Kits

EXAIR Cooling Kits include a vortex tube, all generators, cold muffler, fitting, tubing and clips to duct cold air, and filter separator.

Model #	Description
3908	Cooling Kit up to 550 Btu/hr. (162 Watts), Small Size
3930	Cooling Kit up to 2,800 Btu/hr. (821 Watts), Medium Size
3998	Cooling Kit up to 10,200 Btu/hr. (2,989 Watts), Large Size

Vortex Tubes

Model #	Description
3202	Vortex Tube, 2 SCFM (57 SLPM), for max. refrigeration, 135 Btu/hr. (40 Watts), Small Size
3204	Vortex Tube, 4 SCFM (113 SLPM), for max. refrigeration, 275 Btu/hr. (80 Watts), Small Size
3208	Vortex Tube, 8 SCFM (227 SLPM), for max. refrigeration, 550 Btu/hr. (162 Watts), Small Size
3210	Vortex Tube, 10 SCFM (283 SLPM), for max. refrigeration, 650 Btu/hr. (191 Watts), Medium Size
3215	Vortex Tube, 15 SCFM (425 SLPM), for max. refrigeration, 1,000 Btu/hr. (293 Watts), Medium Size
3225	Vortex Tube, 25 SCFM (708 SLPM), for max. refrigeration, 1,700 Btu/hr. (498 Watts), Medium Size
3230	Vortex Tube, 30 SCFM (850 SLPM), for max. refrigeration, 2,000 Btu/hr. (586 Watts), Medium Size
3240	Vortex Tube, 40 SCFM (1,133 SLPM), for max. refrigeration, 2,800 Btu/hr. (821 Watts), Medium Size
3250	Vortex Tube, 50 SCFM (1,416 SLPM), for max. refrigeration, 3,400 Btu/hr. (997 Watts), Large Size
3275	Vortex Tube, 75 SCFM (2,124 SLPM), for max. refrigeration, 5,100 Btu/hr. (1,494 Watts), Large Size
3298	Vortex Tube, 100 SCFM (2,832 SLPM), for max. refrigeration, 6,800 Btu/hr. (1,993 Watts), Large Size
3299	Vortex Tube, 150 SCFM (4,248 SLPM), for max. refrigeration, 10,200 Btu/hr. (2,989 Watts), Large Size
3402	Vortex Tube, 2 SCFM (57 SLPM), for max. cold temperature, Small Size
3404	Vortex Tube, 4 SCFM (113 SLPM), for max. cold temperature, Small Size
3408	Vortex Tube, 8 SCFM (227 SLPM), for max. cold temperature, Small Size
3410	Vortex Tube, 10 SCFM (283 SLPM), for max. cold temperature, Medium Size
3415	Vortex Tube, 15 SCFM (425 SLPM), for max. cold temperature, Medium Size
3425	Vortex Tube, 25 SCFM (708 SLPM), for max. cold temperature, Medium Size
3430	Vortex Tube, 30 SCFM (850 SLPM), for max. cold temperature, Medium Size
3440	Vortex Tube, 40 SCFM (1,133 SLPM), for max. cold temperature, Medium Size
3450	Vortex Tube, 50 SCFM (1,416 SLPM), for max. cold temperature, Large Size
3475	Vortex Tube, 75 SCFM (2,124 SLPM), for max. cold temperature, Large Size
3498	Vortex Tube, 100 SCFM (2,832 SLPM), for max. cold temperature, Large Size
3499	Vortex Tube, 150 SCFM (4,248 SLPM), for max. cold temperature, Large Size

Vortex Tube Accessories and Components

Model #	Description
3905	Cold Muffler for 2 through 8 SCFM (57-227 SLPM) Vortex Tube, Small Size
3901	Cold Muffler for 10 through 40 SCFM (283-1,133 SLPM) Vortex Tube, Medium Size
3906	Cold Muffler for 50 through 150 SCFM (1,416-4,248 SLPM) Vortex Tube, Large Size
3903	Hot Muffler for 2 through 40 SCFM (57-1,133 SLPM) Vortex Tube, Small & Medium Size
3907	Hot Muffler for 50 through 150 SCFM (1,416-4,248 SLPM) Vortex Tube, Large Size
3909	Generator Kit for 2 through 8 SCFM (57-227 SLPM) Vortex Tube, Small Size
3902	Generator Kit for 10 through 40 SCFM (283-1,133 SLPM) Vortex Tube, Medium Size
3910	Generator Kit for 50 through 150 SCFM (1,416-4,248 SLPM) Vortex Tube, Large Size

Generator Kits ordered with a vortex tube include all generators for the specified tube. Permits setting the vortex tube for all capacities and styles.

Generator Only —Specify capacity (SCFM) and style ("R" for max. refrigeration, "C" for max. cold temperature).

Example:
15-R = 15 SCFM Generator for max. refrigeration
50-C = 50 SCFM Generator for max. cold temperature

Accessories

Model #	Description
9001	Automatic Drain Filter Separator, 3/8 NPT, 65 SCFM (1,841 SLPM)
9032	Automatic Drain Filter Separator, 1/2 NPT, 90 SCFM (2,549 SLPM)
9002	Automatic Drain Filter Separator, 3/4 NPT, 220 SCFM (6,230 SLPM)
9005	Oil Removal Filter, 3/8 NPT, 15-37 SCFM (425-1,048 SLPM)
9006	Oil Removal Filter, 3/4 NPT, 50-150 SCFM (1,416-4,248 SLPM)
9015	Valve and Thermostat Kit, 120V, 50/60Hz, 1/4 NPT, 40 SCFM (1,133 SLPM)

Other solenoid valves and thermostats available. Contact factory.
Note: Flow ratings shown (SCFM/SLPM) assume 100 PSIG (6.9 BAR) inlet pressure. At other pressures, flow is proportional to absolute inlet pressure.



Dual Vortex Tubes rapidly cooling milk chocolate on a production line.

TECHELP 1-800-903-9247 DIRECT

Order Direct
We Ship From Stock
www.exair.com techelp@exair.com

GO GREEN
SAVE MONEY
Order EXAIR's EFC™ electronic flow control to minimize compressed air use.
See page 7 for details.

EXAIR_Cat36_25_FROMINDESIGN.indb 210 12/20/24 3:48 PM

Adjustable Spot Cooler

Cold air to -30°F (-34°C) from your compressed air supply for spot cooling!



What Is The Adjustable Spot Cooler?

A low cost, reliable, maintenance-free solution to a variety of industrial spot cooling problems. With the turn of a knob, you can select the temperature best suited to your application. **The Adjustable Spot Cooler provides a precise temperature setting from -30°F (-34°C) to room temperature.**

The Adjustable Spot Cooler incorporates a vortex tube that converts an ordinary supply of compressed air into cold air.

- It can produce temperatures from -30° to +70°F (-34° to +21°C)
- Parts included for flow rates of 15, 25, and 30 SCFM (425, 708 and 850 SLPM). 25 SCFM (708 SLPM) generator is factory installed.
- It can produce refrigeration up to 2,000 Btu/hr. (586 Watts)

A swivel magnetic base provides easy mounting and portability. Flexible tubing that holds its position directs the cold air. No moving parts or CFC's assures maintenance free operation.

Why The Adjustable Spot Cooler?

The Adjustable Spot Cooler is quiet (less than 75 dBA), easily set with a thermometer that will hold the temperature setting. It's ideal for applications where mist or liquid cooling cannot be used due to part contamination or cost. Tolerances, product finish and production rates can improve dramatically.

The Adjustable Spot Cooler is available with either a single point or dual point hose kit. The single point system (Model 3825) is recommended for cooling a small surface like solder joints, hot melts or drilled plastics. The dual point system (Model 3925) is recommended when heat is generated over a larger surface area.

Applications

- Adjusting thermostats
- Cooling solder
- Cooling machined plastics
- Setting hot melts
- Cooling welding horns
- Cooling molded plastics
- Electronic component cooling
- Cooling gas samples
- Cooling environmental chambers

Advantages

- No moving parts
- No electricity or chemicals
- Small, lightweight
- Low cost
- Maintenance free
- Instant cold air
- Quiet - less than 75 dBA
- Swivel magnetic base
- Interchangeable generators

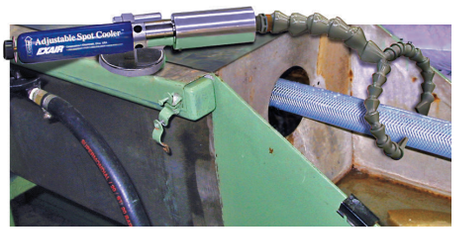

PVC hose is cooled at the exit of an extruder so it can be coiled immediately.



The Adjustable Spot Cooler replaces flood coolant and eliminates hours of cleanup on a cast iron machining operation.



The Adjustable Spot Cooler maintains critical tolerances on machined plastic parts.

EXAIR_Cat36_25_FROMINDESIGN.indb 211 12/20/24 3:48 PM

Adjustable Spot Cooler

How The Adjustable Spot Cooler Works

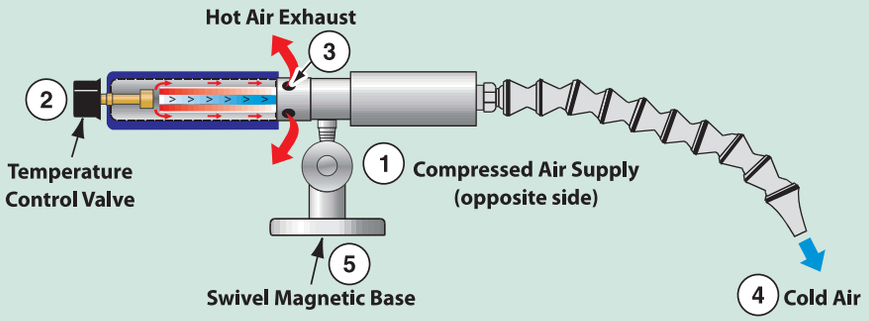

The Adjustable Spot Cooler incorporates a vortex tube to convert an ordinary supply of compressed air (1) into two low pressure streams, one hot and one cold. (For complete information on vortex tube operation, see page 204.) With the turn of a knob, the **temperature control valve** (2) allows some hot air to flow through a muffling sleeve and out the **hot air exhaust** (3). The opposite end provides a cold airstream (4) that is muffled and discharged through the flexible hose, which directs it to the point of use. The **swivel magnetic base** (5) provides easy mounting and portability.

Specifications

Pressure Supply		Air Consumption		Sound Level
PSIG	BAR	SCFM	SLPM	dBA
100	6.9	15	425	72
100	6.9	25*	708	73
100	6.9	30	850	74

* 25 SCFM (708 SLPM) generator is factory installed.
Air consumption is based on generator installed.



The Model 3825 Adjustable Spot Cooler can produce temperatures from -30° to +70°F (-34° to +21°C).

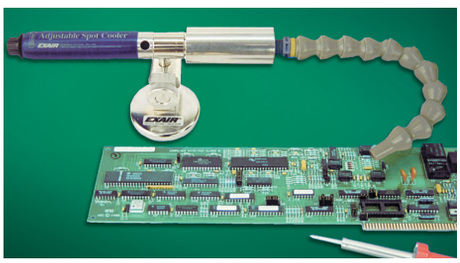

Electronic components stay cool during a soldering operation.

Dimensions

DOWNLOAD drawings at EXAIR.com

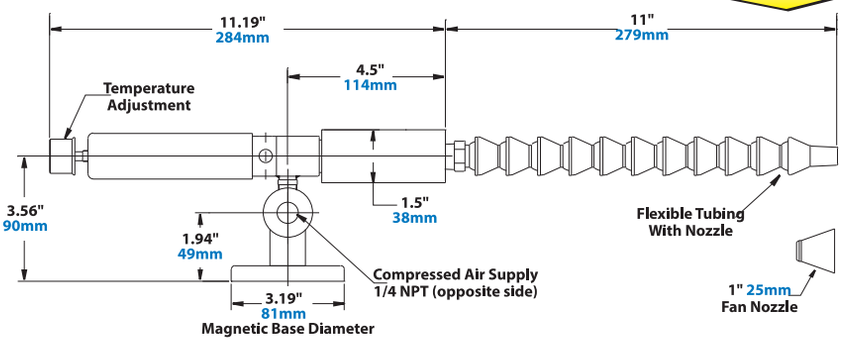

Adjusting the Spot Cooler

The Adjustable Spot Cooler System can produce a full range of airflows and temperatures as determined by the knob setting and a small internal part called a generator. The generators control the SCFM (SLPM) of air consumption and are easily interchangeable.

The Adjustable Spot Cooler has a 25 SCFM (708 SLPM) generator installed that produces up to 1,700 Btu/hr. (498 Watts). If less cooling is desired, the 15 SCFM (425 SLPM) generator, which delivers 1,000 Btu/hr. (293 Watts), can be installed. If more cooling is needed, the 30 SCFM (850 SLPM) generator can be installed for up to 2,000 Btu/hr. (586 Watts).

Controlling the Cold Air

The Adjustable Spot Cooler gives instant cold air when filtered compressed air is supplied to it. Cycling on and off is a good way to save air. For on and off control, use a Model 9012 Manual Shutoff Valve. To turn the Adjustable Spot Cooler on with the machine, the Model 9020 Solenoid Valve may be used and wired through the machine control switch. The EFC electronic flow control shown on page 7 can also be used.

EXAIR_Cat36_25_FROMINDESIGN.indb 212 12/20/24 3:48 PM

Testing Heat Tape Thermostats

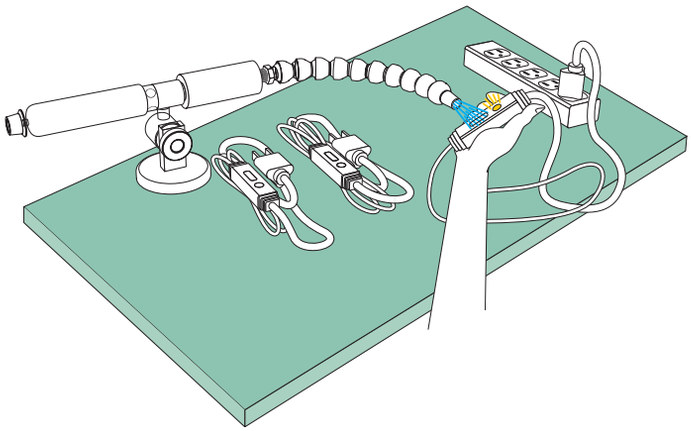

The Problem: A manufacturer of electrical heat tapes had a problem testing thermostats for accuracy. The heat tape is supposed to switch on when the outdoor temperature dips below 40°F to prevent pipes from freezing or ice from building up on a roof's edge. The liquid-tight thermostat of every tape had to be dipped into a bowl of ice water (thermometer checked at 36°F (2°C)) to make sure the indicator light came on and the tape got warm. Summertime heat caused the water to heat up so quickly that more time was spent regulating the water temperature than testing thermostats.

The Solution: The water bath was replaced with a **Model 3825 Adjustable Spot Cooler. Once set to their desired temperature of 36°F (2°C), it provided a stable temperature all day long without adjustment.** Drying each heat tape was no longer required and testing was over in seconds.

Comment: The Adjustable Spot Cooler paid for itself in no time as a result of the increased productivity. In this case, **the company used the included 15 SCFM (425 SLPM) generator which minimized the compressed air use, costing only 23 cents per hour of continuous use!** When testing thermostats, cooling machined plastics, setting hot melts or controlling tolerances, the Adjustable Spot Cooler is the best choice.

Adjustable Spot Cooler Systems



Model 3825 Adjustable Spot Cooler System

includes the Adjustable Spot Cooler, single point hose kit with cone and fan nozzle, swivel magnetic base, filter separator, 15 and 30 SCFM (425 and 850 SLPM) generators. (25 SCFM/708 SLPM generator installed.)

Accessories and Components	
Model #	**Description**
5901	Single Point Hose Kit (Included with 3825)
5902	Dual Point Hose Kit (Included with 3925)
9004	Auto Drain Filter Separator, 1/4 NPT, 43 SCFM (1,359 SLPM) (Included with 3825 and 3925)
9005	Oil Removal Filter, 3/8 NPT, 15 - 37 SCFM (425 - 1,048 SLPM)
9012	Manual Shutoff Valve, 1/4 NPT
9020	Solenoid Valve, 120V, 50/60Hz, 1/4 NPT, 40 SCFM (1,133 SLPM)



Model 3925 Adjustable Spot Cooler System

includes the Adjustable Spot Cooler, dual point hose kit with cone and fan nozzles, swivel magnetic base, filter separator, 15 and 30 SCFM (425 and 850 SLPM) generators. (25 SCFM/708 SLPM generator installed.)

(Adjustable Spot Cooler with dual point hose kit is recommended when heat is generated over a larger surface area.)

Vortex Tubes & Spot Cooling

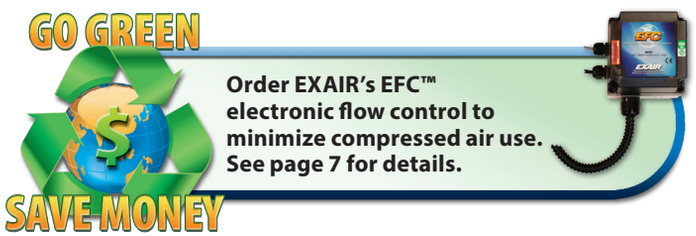

EXAIR_Cat36_25_FROMINDESIGN.indb 213 12/20/24 3:48 PM

Mini Cooler™

Cool small parts and tools with clean, cold air!

Prevent burning, melting or breakage!

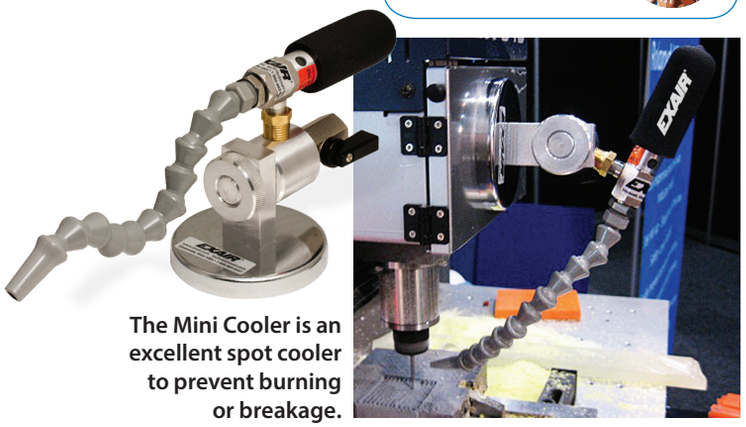

The Mini Cooler is an excellent spot cooler to prevent burning or breakage.

What Is The Mini Cooler?

A proven way to reduce downtime and increase productivity on a variety of operations involving small parts where heat is a problem. EXAIR's Mini Cooler produces a stream of 16°F (-9°C) cold air to prevent heat build-up. **The Mini Cooler is particularly effective on high speed operations to prevent burning, melting and heat related breakage.** Operation is quiet (76 dBA) and there are no moving parts to wear out.

Built to Last 5 yr. WARRANTY
See our Terms & Conditions page for complete details.

Applications

- Small tool cooling
- Needle cooling
- Blade cooling
- Lens grinding

Advantages

- Low cost
- Increases production rates
- Improves tolerances
- Quiet, compact

Mini Cooler Specifications

Air Consumption		Temperature Out		Sound @ 3 (914mm)	
SCFM	SLPM	°F	°C	dBA	INLET
8	227	16	-9	76	1/4 NPT

Supply air at 100 PSIG (6.9 BAR) & 70°F (21°C)

How The Mini Cooler Works

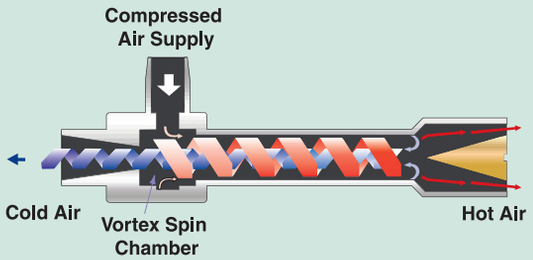

The Mini Cooler incorporates a vortex tube to convert a small amount of compressed air into two low pressure streams, one moving within the other in opposite directions (see page 204). The two airstreams exchange heat, producing cold air from one end of the tube and hot air from the other. A flexible hose directs the cold airstream at the surface to be cooled.

Mini Cooler Systems



Model 3808
Mini Cooler System
(one cold outlet)

Includes Mini Cooler, Single Point Hose Kit, Swivel Magnetic Base and Manual Drain Filter Separator with Mounting Bracket.



Model 3308
Mini Cooler System
(two cold outlets)

includes Mini Cooler, Dual Point Hose Kit, Swivel Magnetic Base and Manual Drain Filter Separator with Mounting Bracket.

Dimensions

DOWNLOAD drawings at EXAIR.com

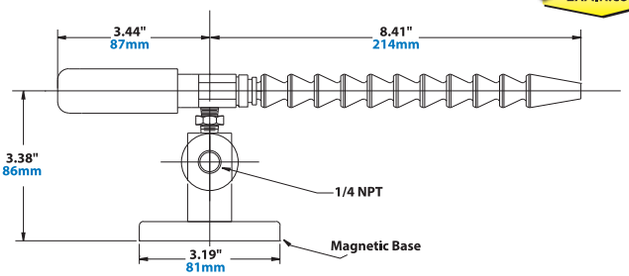

Mini Cooler	
Model #	Description
3808	Mini Cooler System (one cold outlet) includes the Mini Cooler, swivel magnetic base, mini single point hose kit and manual drain filter with mounting bracket
3308	Mini Cooler System (two cold outlets) includes the Mini Cooler, swivel magnetic base, mini dual point hose kit and manual drain filter with mounting bracket

Accessories	
Model #	Description
5904	Mini Cooler Single Point Hose Kit (Included with 3808)
5905	Mini Cooler Dual Point Hose Kit (Included with 3308)
9003	Manual Drain Filter Separator, 1/4 NPT (Included with 3808 and 3308)
9012	Manual Shutoff Valve, 1/4 NPT
9027	Oil Removal Filter, 1/4 NPT, 24 SCFM (680 SLPM)

EXAIR_Cat36_25_FROMINDESIGN.indb 214 12/20/24 3:48 PM

An INTELLIGENT COMPRESSED AIR® Product

Cold Gun Aircoolant System™



Plant Engineering PRODUCT of the YEAR Finalist 2007

Replace messy mist systems - improve dry machining with clean, cold air!



The Model 5215 Cold Gun keeps the part cool to the touch and prevents discoloration.

What Is The Cold Gun Aircoolant System?



SCAN & WATCH the video!
https://exair.co/04-cgv

A new solution to an old problem. Heat build up on dry machining operations reduces tool life and machining rates. The Cold Gun Aircoolant System produces a stream of **clean, cold air at 54°F (30°C) below supply air temperature. Operation is quiet and there are no moving parts to wear out.** It will remove heat to prolong tool life and increase productivity on machining operations when liquid coolants cannot be used.

The Cold Gun is also an alternative to expensive mist systems. It eliminates the costs associated with the purchase and disposal of cutting fluids and worker related health problems from breathing airborne coolants or slipping on wet floors.

EXAIR's Cold Gun is non-adjustable to prevent freeze-up during use. Cold airflow and temperature drop are factory set to optimize the gun's cooling capability.



Cold air eliminates heat cracking of the carbide tool during sharpening.

Applications

- Tool sharpening
- Drill and cutter grinding
- Routing
- Plunge and form grinding
- Milling
- Surface grinding
- Drilling
- Tire grinding
- Band sawing
- Plastic machining
- Laser cutting
- Chill rolls
- Setting hot melt adhesives

Advantages

- Improves production rates
- Prevents burning
- Extends tool life - reduces breakage
- Improves tolerance control
- Prevents smearing of metal or plastics
- Finished part is dry
- Eliminates wheel loading
- Low cost
- Compact, lightweight, portable
- No moving parts - maintenance free
- Quiet
- No coolant cost
- No electricity

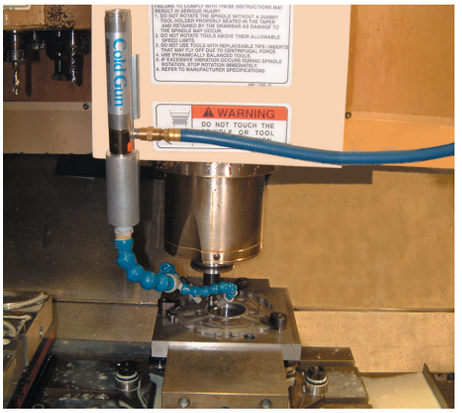

The Model 5315 Cold Gun cools a two flute 3/8" carbide cutter on a CNC, increasing tool life by 50%.

EXAIR_Cat36_25_FROMINDESIGN.indb 215 12/20/24 3:48 PM

Cold Gun Aircoolant System

Applications

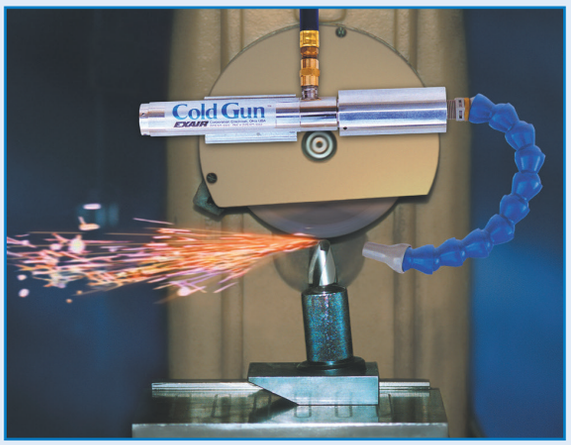

Model 5215 Cold Gun System

Tool Grinding

Cold air eliminates heat cracking of carbide and tool edge burning during grinding and sharpening operations. Increased tool life between regrinds is the result.

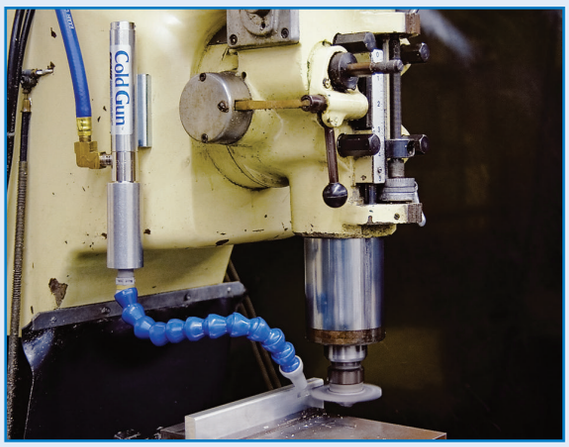

Model 5215 Cold Gun System

Milling & Drilling

Fly cutters up to 460mm in diameter have been cooled with the Cold Gun. Dissipating heat with cold air extends tool life, increases speeds and feeds, and improves finishes.



Model 5315 Cold Gun System

Chill Roll

Cooling a roll with 20°F (-7°C) air keeps the material on the surface from bunching up, jamming or tearing. The metal surface transfers the cold temperature to the product.

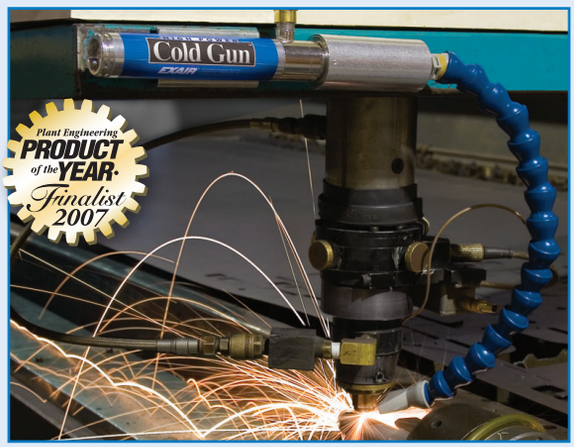

Model 5230 High Power Cold Gun System

Laser Cutting

Cold air cools a laser cut part so it can be handled seconds later. The High Power Cold Gun has twice the cooling capacity of the standard Cold Gun, cooling the part in less time.

EXAIR_Cat36_25_FROMINDESIGN.indb 216 12/20/24 3:48 PM

How The Cold Gun Works

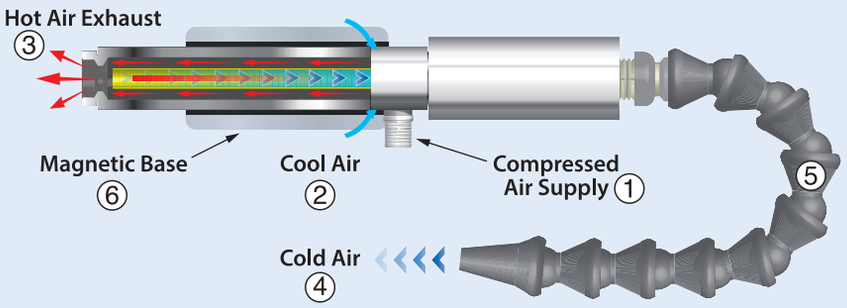

The standard Cold Gun and High Power Cold Gun incorporate a vortex tube to convert an ordinary supply of compressed air (1) into two low pressure streams, one hot and one cold. (For complete information on vortex tube operation, see page 204 of this catalog.) Secondary air is drawn in (2). The Cold Gun's hot airstream is muffled and discharged through the hot air exhaust (3). The cold air (4) is muffled and discharged through the flexible hose (5), which directs it to the point of use. Easy mounting and portability are provided through the use of an attached magnetic base (6).

Specifications

	Pressure Supply		Air Consumption		Sound Level
Model #	PSIG	BAR	SCFM	SLPM	dBA
Cold Gun 5215, 5315	100	6.9	15	425	70
High Power Cold Gun 5230, 5330	100	6.9	30	850	82

Cold Gun Dimensions

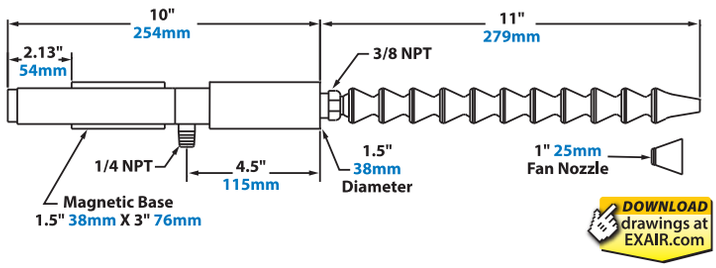

Controlling the Cold Air

The EXAIR Cold Gun gives **instant cold air** when filtered compressed air is supplied to it. Cycling on and off is a good way to save air. **For on and off control,** use a Model 9012 Manual Shutoff Valve. To turn the Cold Gun on with the machine, a solenoid valve may be used and wired through the machine control switch. This method is ideal for hand grinders and drill sharpeners.

The Compressed Air Supply

The Cold Gun is designed to use full line pressure of 80-100 PSIG (5.5-6.9 BAR). Temperature drop and flow are reduced when lower input pressures are applied. The use of clean, filtered air is essential to the operation of the Cold Gun. A filter separator that removes moisture, dirt and other particulates from the compressed air is included with each Cold Gun System. An optional Oil Removal Filter is also available. (See page 234 for details.)

Selecting The Right Model

Cold Gun Aircoolant Systems are available with either a Single Point or Dual Point Hose Kit.



The Single Point Hose Kit (included with the Model 5215 Cold Gun and Model 5230 High Power Cold Gun) is recommended for applications where a concentrated airflow is needed such as drilling and grinding operations.



The Dual Point Hose Kit (included with the Model 5315 Cold Gun and Model 5330 High Power Cold Gun) is recommended for applications where the heat is generated over a larger surface area such as band sawing, milling, chill rolls and hot melt adhesives.

A Cold Gun System with the Model 5901 Single Point Hose Kit can be easily converted to a "dual point" system with the purchase of the Model 5902 Dual Point Hose Kit.

Need More Cooling?

EXAIR's High Power Cold Gun Aircoolant System™ produces twice the airflow of the standard Cold Gun, doubling the cooling capability. It produces cold air at 54°F (30°C) below the supply air temperature so the air is as cold as possible without freezing up. Two systems are available: the Model 5230 High Power Cold Gun with Single Point Hose Kit and Model 5330 High Power Cold Gun with Dual Point Hose Kit.

EXAIR_Cat36_25_FROMINDESIGN.indb 217 12/20/24 3:48 PM

Cold Gun Aircoolant System

Purdue University Study Confirms Benefits Of The EXAIR Cold Gun

Tooling costs a lot of money to replace. That's only part of the problem. As the tools wear out, you can expect:

- Slowed production and downtime to change out the tooling
- Poor tolerances and decreased dimensional accuracy due to increased temperature
- Increased cutting force is required (generates more heat and uses more electricity)

If you could just make the tooling last longer, you'd not only cut the tool cost but could increase profits by reducing scrapped parts and downtime.

A long term study on the effect of refrigerated air on tool wear in wood machining was conducted at the Forestry Products Department of Purdue University by Ms. Judith Gisip. The project was under the direction of Dr. Rado Gazo (department professor) and Harold Stewart (professor at North Carolina State University with 35 years in wood machining research). Wood is brutal on tooling. In metalworking, most of the heat goes away with the machined chip. Wood is an excellent insulator and doesn't conduct the heat away, which keeps it all there at the tool. Temperatures can exceed 1472°F (800°C)!

The extensive tests at Purdue were conducted in a 70°F climate controlled room. They tested (4) 1/2" (12.7mm) two-flute cutters on a CNC router at 16,000 rpm. (22) sheets of 3/4" thick MDF (medium density fiberboard) were fed one at a time, cutting away 1/4" (6mm) depth of cut on each pass. Power consumption of the CNC was recorded (current draw increases as the tool starts to dull). When finished, the surface of the tools was examined using a scanning electron microscope. Machining with the Cold Gun's 20°F air reduced tool wear by over 21% compared to the results with no cooling.

For complete details of the Purdue study, visit our web site at www.exair.com/purdue.htm.

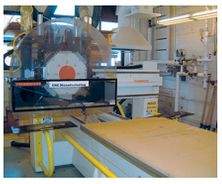

Purdue's CNC router turns (22) 4'×8' sheets into sawdust.

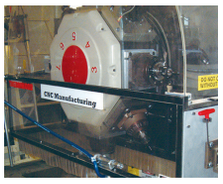

EXAIR's Cold Gun is mounted under the protective guard.

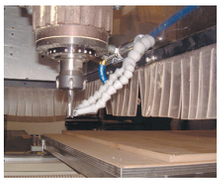

Cold air from EXAIR's Model 5315 Cold Gun System keeps the tooling cool.

How Much Can You Save?

- A 1/2" two flute router bit for wood is approximately $67.
- The 21% reduction in tool wear when using a Cold Gun is $67 × 0.21 = **$14.07 savings per bit.**
- If you use (1) router bit per working day, the savings is $14.07 × 5 working days = **$70.35 per week** / **$3,658 per year** For One Bit!

Cold Gun Aircoolant Systems



Model 5215 Cold Gun System

(one cold outlet)

includes Cold Gun, Single Point Hose Kit, 3/8" (10mm) Cone Nozzle, 1-1/4" (32mm) Fan Nozzle, Manual Drain Filter Separator.



Model 5315 Cold Gun System

(two cold outlets)

includes Cold Gun, Dual Point Hose Kit, (2) 1/4" (6mm) Cone Nozzles, (2) 1" (25mm) Fan Nozzles, Manual Drain Filter Separator.



Model 5230 High Power Cold Gun System

(one cold outlet)

includes High Power Cold Gun, Single Point Hose Kit, 3/8" (10mm) Cone Nozzle, 1-1/4" (32mm) Fan Nozzle, Automatic Drain Filter Separator.



Model 5330 High Power Cold Gun System

(two cold outlets)

includes High Power Cold Gun, Dual Point Hose Kit, (2) 1/4" (6mm) Cone Nozzles, (2) 1" (25mm) Fan Nozzles, Automatic Drain Filter Separator.

A Dual Point Hose Kit is recommended when heat is generated over a larger surface area.

Accessories and Components

Model #	Description	Model #	Description
5015	Cold Gun Only	9005	Oil Removal Filter, 3/8 NPT, 15-37 SCFM (425-1,048 SLPM)
5030	High Power Cold Gun Only	9012	Manual Shutoff Valve, 1/4 NPT
5901	Single Point Hose Kit (Included with 5215 and 5230)	9020	Solenoid Valve, 120V, 50/60Hz, 1/4 NPT, 40 SCFM (1,133 SLPM)
5902	Dual Point Hose Kit (Included with 5315 and 5330)	9021	Solenoid Valve, 200-240V, 50/60Hz, 1/4 NPT, 40 SCFM (1,133 SLPM)
9003	Manual Drain Filter Separator, 1/4 NPT, 27 SCFM (765 SLPM)	9031	NEMA 4/4X Solenoid Valve, 24VDC, 1/4 NPT, 40 SCFM (1,133 SLPM)
9004	Automatic Drain Filter Separator, 1/4 NPT, 43 SCFM (1,359 SLPM)		

For Technical Assistance, Call an EXAIR Application Engineer 1-800-903-9247
Toll Free FAX (866) 329-3924 • E-mail: techelp@exair.com • www.exair.com

EXAIR_Cat36_25_FROMINDESIGN.indb 218 12/20/24 3:48 PM

An INTELLIGENT COMPRESSED AIR® Product

Cabinet Cooler® Systems



Stop electronic control downtime due to heat, dirt, and moisture!

Cabinet Coolers maintain NEMA 4, 4X, and 12 integrity.

All Cabinet Coolers are c UL us LISTED, c CLASSIFIED UL us, and/or CE compliant!

What is an EXAIR Cabinet Cooler System?



A low cost, reliable way to cool and purge electronic control panels. EXAIR Cabinet Coolers incorporate a vortex tube to produce cold air from compressed air - with no moving parts. The compact Cabinet Cooler can be installed in minutes through a standard electrical knockout. NEMA 12, 4, and 4X (IP54 and IP66) Cabinet Coolers that match the NEMA rating of the enclosure are available in many cooling capacities for large and small control panels.



Why EXAIR Cabinet Cooler Systems?

The vortex tubes incorporated in the EXAIR Cabinet Coolers are constructed of stainless steel. The wear, corrosion and oxidation resistance of stainless steel assures long life and maintenance free operation. All Cabinet Coolers are UL Listed, UL Classified and/or CE compliant.

Applications

- Programmable controllers
- Line control cabinets
- Motor control centers
- Relay panels
- NC/CNC systems
- Modular control centers
- CCTV cameras
- Computer cabinets
- Laser housings
- Electronic scales
- Food service equipment

Advantages

- Low cost
- Compact
- Cooling capacities to 5,600 Btu/hr. (1,641 Watts)
- Quiet
- Install in minutes
- Maintain NEMA 12, 4 and 4X integrity (IP54 and IP66)
- Stabilize enclosure temperature and humidity
- No CFC's
- No moving parts -maintenance free
- Mount in standard electrical knockout
- Stop nuisance tripping
- Stop heat damage
- Eliminate fans and filters
- Eliminate lost production
- Stop circuit drift
- Stop dirt contamination
- Provide washdown protection

Special Cabinet Coolers

- High temp. models for ambients up to 200°F (93°C) available
- Type 316 stainless steel available
- Purge models for non-hazardous locations available

EXAIR_Cat36_25_FROMINDESIGN.indb 219 12/20/24 3:48 PM

Cabinet Cooler® Systems

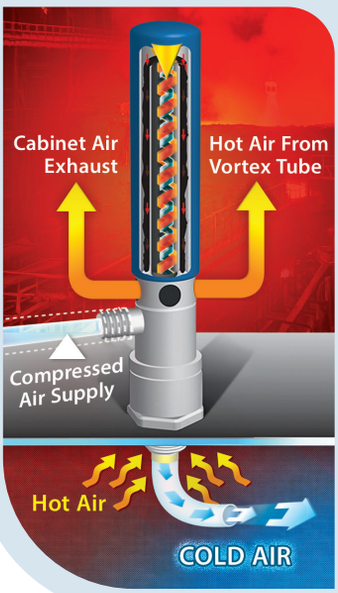

How The Cabinet Cooler Works

Compressed air enters the vortex tube powered Cabinet Cooler and is converted into two streams, one hot and one cold. (For more information on vortex tube operation, see page 204.) Hot air from the vortex tube is muffled and exhausted through the vortex tube exhaust. The cold air is discharged into the control cabinet through the cold air distribution kit. The displaced hot air in the cabinet rises and exhausts to atmosphere through the cabinet air exhaust at a slight positive pressure. Thus, the control cabinet is both cooled and purged with cool, clean air. Outside air is never allowed to enter the control panel.

Mounting

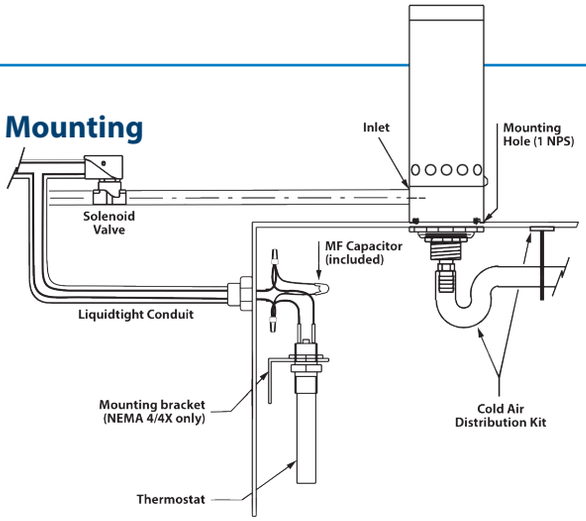

The Cabinet Cooler mounts to the enclosure through a drilled hole or electrical knockout. The NEMA 12 (IP54) Cabinet Coolers may be mounted on the top or side of the panel. NEMA 4 and 4X (IP66) Cabinet Coolers must be mounted on the top of the panel or on the side of the panel using one of our Side Mount Kits (See page 229).

Selecting The Right Model – Know Your System Options

Each different NEMA rated Cabinet Cooler system is available with a thermostat control or as a continuous operation system. Each of these systems will include a water-dirt filter separator to prevent water condensate and dirt from entering your enclosure, and a cold air distribution kit used to direct the air for circulation or on to hot spots. EXAIR also manufactures Cabinet Cooler systems for difficult environments. We have provided additional information on our Cabinet Cooler systems suitable for high temperature environments, Non-Hazardous purge environments, Type 316SS material coolers for highly corrosive environments, Hazardous Location and ATEX environments.



Cabinet Cooler Systems with ETC provide temperature control.

NEMA Rating

The first step to solving your overheating problem is to identify the NEMA integrity your enclosure will require. To the right is an explanation to help you determine which NEMA integrity Cabinet Cooler system we should ship to you.

Environmental Considerations

NEMA 12 (IP54) Cabinet Coolers (dust-tight, oil-tight) are ideal for general industrial environments where no liquids or corrosives are present.

NEMA 4 (IP66) Cabinet Coolers (dust-tight, oil-tight, splash resistant, indoor/outdoor service) incorporate a low pressure relief valve for both the vortex tube and cabinet air exhaust. This valve closes and seals when the cooler is not operating **to maintain the integrity of a NEMA 4 enclosure.**

NEMA 4X (IP66) Cabinet Coolers offer the same protection as NEMA 4 but are **constructed of stainless steel for food service and corrosive environments.**

Thermostat Control

The thermostat control systems are the most efficient way to operate a Cabinet Cooler. They save air by activating the cooler only when internal temperatures approach critical levels. Thermostat controlled cooler systems are the best option when experiencing fluctuating heat loads caused by environment or seasonal changes. The standard thermostat control systems include an adjustable thermostat factory set at 95°F (35°C).

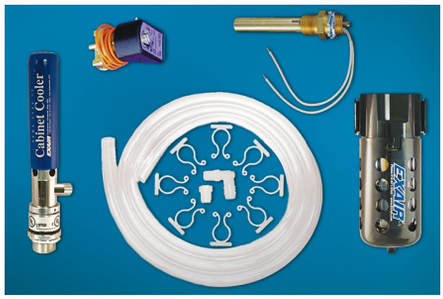

Systems with thermostat control include a Cabinet Cooler, thermostat, solenoid valve, cold air distribution kit and filter.

EXAIR_Cat36_25_FROMINDESIGN.indb 220 12/20/24 3:48 PM

Selecting The Right Model – Know Your System Options (continued)

ETC™ Electronic Temperature Control

EXAIR's digital ETC (Electronic Temperature Control) provides precise temperature control for your electrical enclosure. It can accurately maintain a constant temperature that is slightly under the maximum rating of the electronics, permitting just enough cooling for the electronics without going so cold as to waste compressed air. The LED readout of the ETC displays the internal temperature of the electrical enclosure (°F or °C) that is constantly being monitored by a quick response thermocouple. The control activates the solenoid valve (included) when the temperature setting is exceeded. The polycarbonate plastic enclosure of the ETC is suitable for NEMA 12, 4 and 4X environments. (Cabinet Cooler not included.)

Model	Voltage	Sample Rate	Max Temp	Solenoid Valve	Setting Temp	Supply Current	Sensor
9238	120VAC, 50-60 Hz	1/sec.	158°F (70°C)	¼ NPT	Push Button	250 mA max	Type J Thermocouple
9258	120VAC, 50/60 Hz	1/sec.	158°F (70°C)	½ NPT	Push Button	325 mA max	Type J Thermocouple
9239	240VAC, 50/60 Hz	1/sec.	158°F (70°C)	¼ NPT	Push Button	165 mA max	Type J Thermocouple
9259	240VAC, 50/60 Hz	1/sec.	158°F (70°C)	½ NPT	Push Button	215 mA max	Type J Thermocouple

ETC controls are available within Cabinet Cooler Systems (see pages 226-228) or separately for retrofitting on existing coolers. All ETC enclosures are NEMA 4X (IP66), UL508 and UL94-5V. ETCs are RoHS and CE compliant.



ETC (Electronic Temperature Control) units are available in four different models. See above for details.

Continuous Operation

Also available in any of our NEMA ratings, continuous operation Cabinet Cooler systems are recommended when constant cooling and constant positive purge are desirable.



Systems for continuous operation include a Cabinet Cooler, cold air distribution kit and filter.

Special Cabinet Coolers

EXAIR manufactures special NEMA 12 (IP54), 4 (IP66) and 4X (IP66) Cabinet Coolers suited to specific environmental requirements:

High Temperature Cabinet Coolers *(shown top right)* for ambient temperatures of 125° to 200°F (52° to 93°C) are available. Internal components can withstand high temperatures (like those near furnaces, ovens, etc.).

Non-Hazardous Purge Cabinet Cooler Systems *(shown middle right)* are ideal for dirty areas where contaminants might normally pass through small holes or conduits. Under normal conditions, the NHP Cabinet Cooler Systems provide a slight positive pressure in the enclosure by passing 1 SCFM (28 SLPM) of air through the cooler, when the solenoid valve is in the closed position. When the thermostat detects high temperature, it energizes the solenoid valve to pass full line pressure and volume of compressed air to the Cabinet Cooler, giving it full cooling capability.

Type 316 Stainless Steel NEMA 4X Cabinet Coolers *(shown bottom right)* are suitable for food service, pharmaceutical, harsh and corrosive environments, and other applications where 316SS is preferred. Capacities from 275 to 5,600 Btu/hr. (80 to 1,641 Watts) are available.

EXAIR High Temperature Cabinet Coolers, Non-Hazardous Purge Cabinet Coolers and Type 316 Cabinet Coolers are now available from stock.



EXAIR_Cat36_25_FROMINDESIGN.indb 221 12/20/24 3:48 PM

Cabinet Cooler® Systems

Filtration: EXAIR Cabinet Cooler Systems include a 5 micron automatic drain water and dirt filter. This filter is critical for protection of electronics from water and dirt in the compressed air line. If oil is present in the compressed air, a coalescing (oil removal) filter, such as EXAIR Model 9005 is recommended. (See page 234)

Inlet Air Temperature: Cabinet Cooler Systems provide a 54°F (30°C) temperature drop from supply air temperature when the inlet pressure is 80 PSIG (5.5 BAR). Elevated inlet temperature will produce a corresponding rise in cold air temperature and reduction in cooling capacity. Low air pressures will also reduce the cooling capacity.

Humidity: For a continuous operating Cabinet Cooler System, relative humidity inside the enclosure stabilizes at 45%. No moisture condenses inside the enclosure. (The enclosure must be sealed to prevent condensation.)

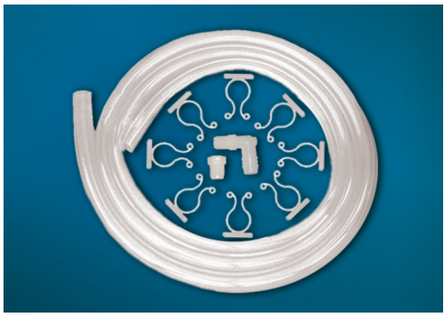

Cold Air Distribution Kit:
The kit includes a length of flexible vinyl tubing used to direct the cold air for circulation, or to hot spots. Tubing connectors and adhesive backed clips to hold the tubing in place are provided.



Solenoid Valve and Thermostat:
Cabinet Cooler Systems with thermostat control include a solenoid valve and thermostat that limit the flow of compressed air to only cool when needed. The thermostat is factory set at 95°F (35°C). It will normally hold ±2°F (1°C) inside the cabinet. Solenoid valves are available in 120V, 60Hz; 110V, 50Hz; 240V, 50/60Hz and 24VDC. All solenoids are CSA Certified and UL Listed or Recognized.

Heat Can Stop Your Machines

When hot weather causes the electronics inside a control cabinet to fail, there is a panic to get the machinery up and running again. There are several cooling options out there and it's important to know the facts.



A. Heat Exchangers and Heat Pipes

These have serious limitations. On hot summer days when the temperatures of the room and inside of the enclosure are about equal, there's not enough difference for effective heat exchange.

- **They fail when dust and dirt clog the filter**
- **The cooling capacity is limited due to ambient conditions**



B. Refrigerant Panel Air Conditioners

These coolers are prone to failure in dirty, industrial environments when dust and dirt clog the filter.

- **It takes almost a day to install**
- **Vibration from machinery causes refrigerant leaks and component failures**



EXAIR Cabinet Cooler® Systems

EXAIR has a complete line of Cabinet Cooler Systems to dependably cool and purge your electrical enclosures. They convert an ordinary supply of compressed air into clean, cold 20°F (-7°C) air. They mount in minutes through an ordinary electrical knockout and have no moving parts to wear out. The compressed air filtration that is provided keeps water, oil and other contaminants out of the enclosure.

- **There is no room air filter to clog**
- **An accurate electrical thermostat control minimizes compressed air use**
- **All Cabinet Coolers are UL Listed, UL Classified and/or CE Compliant**
- **They are the only compressed air powered coolers that are CE compliant**

EXAIR_Cat36_25_FROMINDESIGN.indb 222 12/20/24 3:48 PM

Sizing Guide - Let us do the work

On the following page, EXAIR provides a simple guide to fill in and send to us so we may do the heat load calculations for you and specify a Cabinet Cooler system. You may e-mail the information to techelp@exair.com, call 1-800-903-9247, fill out an online form at exair.com/sizing, use our new calculator at https://exair.co/cccalc_ca or fax the information to 1-866-329-3924.

How To Calculate Heat Load for Your Enclosure

If you would like to determine the correct model for your enclosure without our assistance, it is first necessary to determine the total heat load to which the control panel is subjected. This total heat load is the combination of two factors – heat dissipated within the enclosure and heat transfer from outside the enclosure.

To Calculate Btu/hr.:

1. First, determine the approximate Watts of heat generated within the enclosure. Watts × 3.41 = Btu/hr.
2. Then, calculate outside heat transfer as follows:
   a. Determine the area in square feet exposed to the air, ignoring the top of the cabinet.
   b. Determine the temperature differential between maximum surrounding temperature and desired internal temperature. Then, using the Temperature Conversion Table *(below)*, determine the Btu/hr./ft.^{2} for that differential. Multiplying the cabinet surface area times Btu/hr./ft.^{2} provides external heat transfer in Btu/hr.
3. Add internal and external heat loads for total heat load.

To Calculate Watts:

1. First, determine the approximate Watts of heat generated within the enclosure.
2. Then, calculate outside heat transfer as follows:
   a. Determine the area in square meters exposed to the air, ignoring the top of the cabinet.
   b. Determine the temperature differential between maximum surrounding temperature and desired internal temperature. Then, using the Metric Temperature Conversion Table *(below)*, determine the Watts/m^2 for that differential. Multiplying the cabinet surface area times Watts/m^2 provides external heat transfer in Watts.
3. Add internal and external heat loads for total heat load.

Temperature Conversion Table

Temperature Differential °F	Btu/hr./ft.^{2}
5	1.5
10	3.3
15	5.1
20	7.1
25	9.1
30	11.3
35	13.8
40	16.2

After picking which NEMA integrity you need, choosing your options and calculating your heat load -go to page 226-228 to specify a model number.

See page 230 for HazLoc Cabinet Coolers.
See page 232 for ATEX Cabinet Coolers.

OR Contact EXAIR and we'll walk you right through it.

Temperature Conversion Table (METRIC)

Temperature Differential °C	Watts/m^2
3	5.2
6	11.3
9	17.6
12	24.4
15	31.4
18	39.5
21	47.7

Example:
Internal heat dissipation: 471 Watts or 1,606 Btu/hr.
Cabinet area: 40 ft.^{2}
Maximum outside temperature: 110°F
Desired internal temperature: 95°F

The conversion table (above) shows that a 15°F temperature differential inputs 5.1 Btu/hr./ft.^{2}

40 ft.^{2} × 5.1 Btu/hr./ft.^{2} = 204 Btu/hr. external heat load.

Therefore, 204 Btu/hr. external heat load plus 1,606 Btu/hr. internal heat load = 1,810 Btu/hr. total heat load or Btu/hr. refrigeration required to maintain desired temperature.

In this example, the correct choice is a 2,000 Btu/hr. Cabinet Cooler System. Choose a Cabinet Cooler model by determining the NEMA rating of the enclosure (type of environment), and with or without thermostat control.

Example:
Internal heat dissipation: 471 Watts
Cabinet area: 3.7m^2
Maximum outside temperature: 44°C
Desired internal temperature: 35°C

The conversion table (above) shows that a 9°C temperature differential inputs 17.6 Watts/m^2.

3.7m^2 × 17.6 Watts/m^2 = 65.1 Watts external heat load.

Therefore, 65.1 Watts external heat load plus 471 Watts internal heat load = 536.1 Watts total heat load or Watts of refrigeration required to maintain desired temperature.

In this example, the correct choice is a 586 Watt Cabinet Cooler System. Choose a Cabinet Cooler model by determining the NEMA rating of the enclosure (type of environment), and with or without thermostat control.

EXAIR_Cat36_25_FROMINDESIGN.indb 223 12/20/24 3:48 PM

EXAIR® Cabinet Cooler® System Sizing Guide

Deliver your Data – Receive a Quote

Use this form to gather the information necessary to specify a Cabinet Cooler System and choose a delivery method below.

Submit online
www.exair.com/sizing.htm

Call us at
1-800-903-9247

TO QUICK MOBILE VERSION
https://exair.co/qr-pro-ccsg

Online chat with us at
www.exair.com

Calculate Yourself
https://exair.co/04-CCcalc

Send Us The Facts!

Cabinet Cooler Sizing Guide

To: Application Engineering Department, EXAIR®

From: **Name**_____

Company_____

FAX number_____

Phone number_____ **Ext.#**_____

E-mail_____

In a hurry? For help NOW, call our Application Engineering Department at 1-800-903-9247

You can fill this form out online at: www.exair.com/sizing.htm



1. Height (H)_____ 2. Width (W)_____ 3. Depth (D)_____
4. *External air temperature now?_____°F or °C
5. *Internal air temperature now?_____°F or °C
6. Maximum external air temperature possible?_____°F or °C
7. Maximum internal air temperature desired?_____°F or °C
8. My cabinet rating is: ☐ NEMA 12 ☐ NEMA 4 ☐ NEMA 4X
   ☐ Other (explain) _____
   _____
9. My cabinet is in an area with a hazardous classification: ☐ YES ☐ NO
10. My cabinet is in an explosive environment: ☐ YES ☐ NO
11. My cabinet is (check all that apply):
   ☐ Vented - outside air circulates through the enclosure
   ☐ Not Vented - outside air does not circulate through the enclosure
   ☐ Wall mounted
   ☐ Fan(s)/Vent(s) - Indicate diameter or SCFM _____
   Number of fans/vents _____
12. Available voltage for thermostat control: ☐ 24 VDC ☐ 110 VAC ☐ 240 VAC

TECHELP 1-800-903-9247 DIRECT

*Using a "Temperature Gun" or infrared thermometer will result in measuring surface temperatures.
Air temperatures are needed for the cabinet cooling calculations. Please use a standard thermometer or thermocouple to measure the air temperature.

EXAIR_Cat36_25_FROMINDESIGN.indb 224 12/20/24 3:48 PM

Cabinet Coolers Keep Working at Full Capacity After Seven Years of Near Constant Operation



The Problem: A manufacturer of automotive radiators had a problem relating to an overheated motor drive which caused one of their two production lines to come to a stop. They used a refrigerant based air conditioner set on the panel, but the air conditioner began leaking water into the panel. The water got into the motor drive, shorted it out and caused the production line to go down. Not only was production down for 1 month, but the motor drive cost them $20,000 to replace by the time they purchased, had it shipped and got it installed.

The Solution: The manufacturer was unsure of what they were going to use for an air conditioning unit because the motor drives had to stay cool. They purchased EXAIR's Model 4330 NEMA 12 2,000 Btu/hr. (586 Watts) Cabinet Cooler System with thermostat control for the panel. The Cabinet Cooler System worked perfectly at solving the cooling problem.

Seven years later, this manufacturer contacted EXAIR for another application. They mentioned the old EXAIR Cabinet Cooler system still on the motor drive panel, cranking out cold air. No maintenance had been performed on the Cabinet Cooler System in that time (as none was necessary) even though the environment was quite dirty. It was still working perfectly!

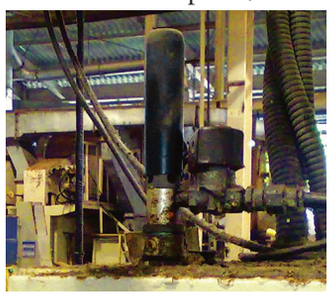

Comment: When we talk to customers about the EXAIR Cabinet Cooler Systems, one of their initial concerns is how long they last. With a source of clean/dry compressed air, the life span of a Cabinet Cooler can easily be in the range of 20 years or more, since there are no moving parts to wear out. In that time frame, you could have to purchase four refrigerant based units, pay to have them changed out and pay for them to be maintained 2 - 4 times per year, changing filters, replacing compressors, and re-charging refrigerant. Not only does the Cabinet Cooler last a long time, but when it is operating, it produces a positive pressure inside the panel which keeps dust and debris from getting inside your cabinet over time.

Cooling in a Hostile Environment



The Problem: A traditional refrigerant based air conditioner was installed on wastewater clarifier controls but could not withstand the harsh chemical environment of the wastewater industry. Controls on a wastewater clarifier process were mounted outdoors and experienced weather related overheating problems in the hotter months of the year. Not only did higher temperatures compromise the performance of the traditional refrigerant based air conditioner, the corrosive environment from the many different wastewater chemicals, acids and bases prematurely wore the critical moving parts of the air conditioner.

The Solution: A Model 4850SS-316 Cabinet Cooler System provided 3,400 Btu/hr. (997 Watts) of cooling for the clarifier controls and kept them running efficiently. The Cabinet Cooler is resistant to seasonal temperature fluctuations because it operates from a source of compressed air and not ambient air. The 316SS construction also provided high corrosion resistance to the chemical environment. Since EXAIR Cabinet Coolers have no moving parts, another maintenance concern was eliminated.

Comment: The inherent reliability of the vortex tube operated Cabinet Cooler System is another important advantage in this application. Because they have no moving parts, EXAIR Cabinet Coolers are virtually impervious to hostile environments. Wastewater treatment, chemical processing, paper manufacturing, steel mills and power generation are just a few of the facilities benefitting from this simple, yet effective technology.

EXAIR_Cat36_25_FROMINDESIGN.indb 225 12/20/24 3:48 PM

Cabinet Cooler® Systems

NEMA 12 (IP54) Cabinet Cooler Systems

	120V Thermostat Control Model #	ETC 120V Thermostat Control Model #	ETC 240V Thermostat Control Model #	High Temp Thermostat Control Model #	Non-Hazardous Purge Thermostat Control Model #	Capacity*		Sound level dBA
						Btu/Hr	Watts	
NEMA 12 (IP54) (Dust, Oil Resistant)	4304	4304-ETC120	4304-ETC240	N/A	NHP4304	275	80	59**
	4308	4308-ETC120	4308-ETC240	N/A	NHP4308	550	162	67**
	4315	4315-ETC120	4315-ETC240	HT4315	NHP4315	1,000	293	73**
	4325	4325-ETC120	4325-ETC240	HT4325	NHP4325	1,700	498	74**
	4330	4330-ETC120	4330-ETC240	HT4330	NHP4330	2,000	586	74**
	4340	4340-ETC120	4340-ETC240	HT4340	NHP4340	2,800	821	78**
	4350	4350-ETC120	4350-ETC240	HT4350	NHP4350	3,400	997	75**
	4360	4360-ETC120	4360-ETC240	HT4360	NHP4360	4,000	1,171	77**
	4370	4370-ETC120	4370-ETC240	HT4370	NHP4370	4,800	1,406	77**
	4380	4380-ETC120	4380-ETC240	HT4380	NHP4380	5,600	1,641	79**

	Cabinet Cooler Only Model #	Continuous Operation Model #	High Temp Continuous Operation Model #	Capacity*		Sound level dBA
				Btu/Hr	Watts	
NEMA 12 (IP54) (Dust, Oil Resistant)	4004	4204	N/A	275	80	59**
	4008	4208	N/A	550	162	67**
	4015	4215	HT4215	1,000	293	73**
	4025	4225	HT4225	1,700	498	74**
	4030	4230	HT4230	2,000	586	74**
	4040	4240	HT4240	2,800	821	78**
	N/A	4250	HT4250	3,400	997	75**
	N/A	4260	HT4260	4,000	1,171	77**
	N/A	4270	HT4270	4,800	1,406	77**
	N/A	4280	HT4280	5,600	1,641	79**

*Cooling capacity at 100 PSIG (6.9 BAR) supply pressure. **With optional cold muffler installed.

NEMA 12 (IP54) Cabinet Cooler systems are dust and oil tight. They are ideal for general industrial environments where no liquids or corrosives are present.

Thermostat control systems (Models 4304-4380) are the most efficient cabinet cooler system because it will turn itself on and off as needed to cool your enclosure. Includes cooler, solenoid valve, thermostat, filter separator and cold air distribution kit. Models are available in 120VAC, 240VAC and 24VDC.

Continuous operation systems (Models 4204-4280) include the cooler, a filter separator and cold air distribution kit.

ETC Thermostat control systems provide on the fly temperature adjustment and display internal temperature in real time.

High Temperature Cabinet Cooler systems should be used when ambient temperatures reach 125°F to 200°F (52°C to 93°C).

Non-Hazardous Purge (NHP) models provide a continuous positive purge within the enclosure to prevent contaminants from entering. They are suited for extremely dirty and dusty environments.

Dual Cabinet Cooler systems (Models (##50-##80) provide for additional cooling.

Dimensions

Model #'s NEMA 12 (IP54)
4004
4008
4204
4208
4304
4308

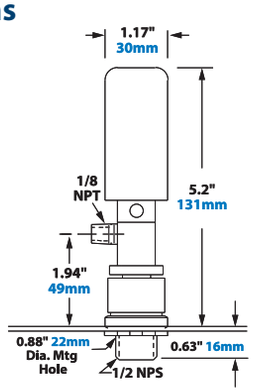

DOWNLOAD drawings at EXAIR.com

Dimensions

Model #'s NEMA 12 (IP54)
4015
4025
4030
4040
4215
4225
4230
4240
4315
4325
4330
4340

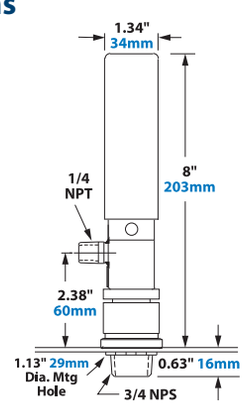

DOWNLOAD drawings at EXAIR.com

EXAIR_Cat36_25_FROMINDESIGN.indb 226 12/20/24 3:48 PM

NEMA 4 (IP66) Cabinet Cooler Systems

	120V Thermostat Control Model#	ETC 120V Thermostat Control Model#	ETC 240V Thermostat Control Model#	High Temp Thermostat Control Model#	Non-Hazardous Purge Thermostat Control Model#	Capacity* Btu/Hr	Capacity* Watts	Sound level dBA
NEMA 4 (IP66) (Splash Resistant)	4804	4804-ETC120	4804-ETC240	N/A	NHP4804	275	80	59**
	4808	4808-ETC120	4808-ETC240	N/A	NHP4808	550	162	67**
	4815	4815-ETC120	4815-ETC240	HT4815	NHP4815	1,000	293	73
	4825	4825-ETC120	4825-ETC240	HT4825	NHP4825	1,700	498	80
	4830	4830-ETC120	4830-ETC240	HT4830	NHP4830	2,000	586	80
	4840	4840-ETC120	4840-ETC240	HT4840	NHP4840	2,800	821	82
	4850	4850-ETC120	4850-ETC240	HT4850	NHP4850	3,400	997	84
	4860	4860-ETC120	4860-ETC240	HT4860	NHP4860	4,000	1,171	84
	4870	4870-ETC120	4870-ETC240	HT4870	NHP4870	4,800	1,406	84
	4880	4880-ETC120	4880-ETC240	HT4880	NHP4880	5,600	1,641	85

	Cabinet Cooler Only Model#	Continuous Operation Model#	High Temp Continuous Operation Model#	Capacity* Btu/Hr	Capacity* Watts	Sound level dBA
NEMA 4 (IP66) (Splash Resistant)	4604	4704	N/A	275	80	59**
	4608	4708	N/A	550	162	67**
	4615	4715	HT4715	1,000	293	73
	4625	4725	HT4725	1,700	498	80
	4630	4730	HT4730	2,000	586	80
	4640	4740	HT4740	2,800	821	82
	N/A	4750	HT4750	3,400	997	84
	N/A	4760	HT4760	4,000	1,171	84
	N/A	4770	HT4770	4,800	1,406	84
	N/A	4780	HT4780	5,600	1,641	85

*Cooling capacity at 100 PSIG (6.9 BAR) supply pressure. **With optional cold muffler installed.

NEMA 4 (IP66) Cabinet Cooler systems are dust and oil tight, splash resistant and indoor/outdoor capable. By incorporating a low pressure valve for all air exhaust, the valve closes and seals when not operating to maintain NEMA 4 enclosure integrity.

Thermostat control systems (Models 4804-4880) are the most efficient system because it will turn itself on and off as needed to cool your enclosure. Includes cooler, solenoid valve and thermostat, filter separator and cold air distribution kit. Models are available in 120VAC, 240VAC and 24VDC.

Continuous operation systems (Models 4704-4780) include the cooler, a filter separator and cold air distribution kit.

ETC Thermostat control systems provide on the fly temperature adjustment and display internal temperature in real time.

High Temperature Cabinet Cooler systems should be used when ambient temperatures reach 125°F to 200°F (52°C to 93°C).

Non-Hazardous Purge (NHP) models provide a continuous positive purge within the enclosure to prevent contaminants from entering. They are suited for extremely dirty and dusty environments.

Dual Cabinet Cooler systems (Models (##50-##80) provide for additional cooling.

Dimensions

Model #'s NEMA 4 (IP66)
4604
4608
4704
4708
4804
4808

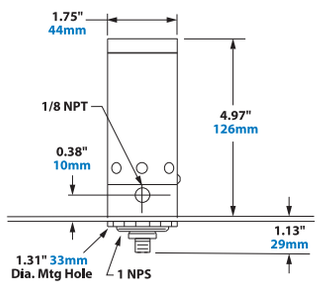

DOWNLOAD drawings at EXAIR.com

Dimensions

Model #'s NEMA 4 (IP66)
4615
4625
4630
4640
4715
4725
4730
4740
4815
4825
4830
4840

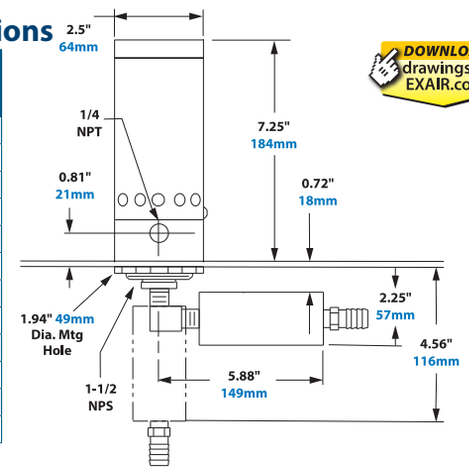

DOWNLOAD drawings at EXAIR.com

EXAIR_Cat36_25_FROMINDESIGN.indb 227 12/20/24 3:48 PM

Cabinet Cooler® Systems

NEMA 4X (IP66) Cabinet Cooler Systems

	120V Thermostat Control Model#	ETC 120V Thermostat Control Model#	ETC 240V Thermostat Control Model#	High Temp Thermostat Control Model#	Non-Hazardous Purge Thermostat Control Model#	Capacity*		Sound level dBA
						Btu/Hr	Watts	
NEMA 4X (IP66) (CorrosionRe-sistant)	4804SS	4804SS-ETC120	4804SS-ETC240	N/A	NHP4804SS	275	80	59**
	4808SS	4808SS-ETC120	4808SS-ETC240	N/A	NHP4808SS	550	162	67**
	4815SS	4815SS-ETC120	4815SS-ETC240	HT4815SS	NHP4815SS	1,000	293	73
	4825SS	4825SS-ETC120	4825SS-ETC240	HT4825SS	NHP4825SS	1,700	498	80
	4830SS	4830SS-ETC120	4830SS-ETC240	HT4830SS	NHP4830SS	2,000	586	80
	4840SS	4840SS-ETC120	4840SS-ETC240	HT4840SS	NHP4840SS	2,800	821	82
	4850SS	4850SS-ETC120	4850SS-ETC240	HT4850SS	NHP4850SS	3,400	997	84
	4860SS	4860SS-ETC120	4860SS-ETC240	HT4860SS	NHP4860SS	4,000	1,171	84
	4870SS	4870SS-ETC120	4870SS-ETC240	HT4870SS	NHP4870SS	4,800	1,406	84
	4880SS	4880SS-ETC120	4880SS-ETC240	HT4880SS	NHP4880SS	5,600	1,641	85

	Cabinet Cooler Only Model#	Continuous Operation Model#	High Temp Continuous Operation Model#	Capacity*		Sound level dBA
				Btu/Hr	Watts	
NEMA 4X (IP66) (Corrosion Resistant)	4604SS	4704SS	N/A	275	80	59**
	4608SS	4708SS	N/A	550	162	67**
	4615SS	4715SS	HT4715SS	1,000	293	73
	4625SS	4725SS	HT4725SS	1,700	498	80
	4630SS	4730SS	HT4730SS	2,000	586	80
	4640SS	4740SS	HT4740SS	2,800	821	82
	N/A	4750SS	HT4750SS	3,400	997	84
	N/A	4760SS	HT4760SS	4,000	1,171	84
	N/A	4770SS	HT4770SS	4,800	1,406	84
	N/A	4780SS	HT4780SS	5,600	1,641	85

*Cooling capacity at 100 PSIG (6.9 BAR) supply pressure. **With optional cold muffler installed.

NEMA 4X (IP66) Cabinet Cooler systems are made from 303 stainless steel, dust and oil tight, splash resistant, indoor/outdoor capable and corrosion resistant. By incorporating a low pressure valve for all air exhaust, the valve closes and seals when not operating to maintain NEMA 4X enclosure integrity.

Thermostat control systems (Models 4804SS-4880SS) are the most efficient system because it will turn itself on and off as needed to cool your enclosure. Includes cooler, solenoid valve and thermostat, filter separator and cold air distribution kit. Models are available in 120VAC, 240VAC and 24VDC.

Continuous operation systems (Models 4704SS-4780SS) include the cooler, a filter separator and cold air distribution kit.

ETC Thermostat control systems provide on the fly temperature adjustment and display internal temperature in real time.

High Temperature Cabinet Cooler systems should be used when ambient temperatures reach 125°F to 200°F (52°C to 93°C).

Non-Hazardous Purge (NHP) models provide a continuous positive purge within the enclosure to prevent contaminants from entering. They are suited for extremely dirty and dusty environments.

Dual Cabinet Cooler systems (Models (##50SS-##80SS) provide for additional cooling.

Dimensions

Model #'s NEMA 4X (IP66)
4604SS
4608SS
4704SS
4708SS
4804SS
4808SS

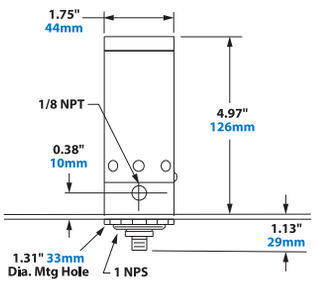

DOWNLOAD drawings at EXAIR.com

NEMA 4X AVAILABLE IN 316SS

Dimensions

Model #'s NEMA 4X (IP66)
4615SS
4625SS
4630SS
4640SS
4715SS
4725SS
4730SS
4740SS
4815SS
4825SS
4830SS
4840SS

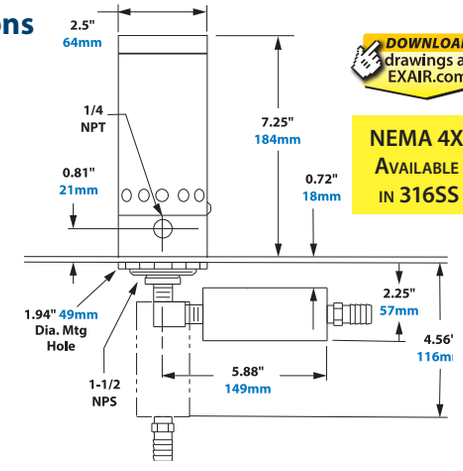

DOWNLOAD drawings at EXAIR.com

NEMA 4X AVAILABLE IN 316SS

EXAIR_Cat36_25_FROMINDESIGN.indb 228 12/20/24 3:48 PM

Accessories and Components			
Model #	Description	Model #	Description
4902	Cold Muffler only	9044	Valve and Thermostat Kit, 240V, 50/60 Hz
4904	Cold Air Distribution Kit (For all Cabinet Coolers 650 Btu/hr. and higher)	9016	NEMA 4-4X Valve and Thermostat Kit, 120V, 50/60 Hz
4905	Cold Air Distribution Kit (For Cabinet Coolers up to 550 Btu/hr.)	9045	NEMA 4-4X Valve and Thermostat Kit, 240V, 50/60 Hz
9004	Automatic Drain Filter Separator, 1/4 NPT, 43 SCFM (1,359 SLPM)	9017	Thermostat Only, 24V-240V, 50/60Hz
9027	Oil Removal Filter (For Cabinet Coolers with 550 Btu/hr. output), 1/4 NPT, 7-24 SCFM (198-680 SLPM)	9018	NEMA 4-4X Solenoid Valve Only, 120V, 50/60 Hz, 1/4 NPT, 40 SCFM (1,133 SLPM)
9005	Oil Removal Filter (For all Cabinet Coolers except 550 Btu/hr. output), 3/8 NPT, 15-37 SCFM (425-1,048 SLPM)	9024	NEMA 4-4X Solenoid Valve Only, 240V, 50/60 Hz, 1/4 NPT, 40 SCFM (1,133 SLPM)
9006	Oil Removal Filter, 3/4 NPT, 50-150 SCFM (1,416-4,248 SLPM)	9020	Solenoid Valve Only, 120V, 50/60 Hz, 1/4 NPT, 40 SCFM (1,133 SLPM)
9008	Pressure Regulator with Gauge, 1/4 NPT, 50 SCFM (1,416 SLPM)	9021	Solenoid Valve Only, 200-240V, 50/60 Hz, 1/4 NPT, 40 SCFM (1,133 SLPM)
9238	ETC - Electronic Temperature Control, 120V, 50/60 Hz, 1/4 NPT	9031	NEMA 4-4X Solenoid Valve Only, 24VDC, 1/4 NPT, 40 SCFM (1,133 SLPM)
9239	ETC - Electronic Temperature Control, 240V, 50/60 Hz, 1/4 NPT	9034	NEMA 4-4X Solenoid Valve Only, 120V, 50/60 Hz, 1/2 NPT, 100 SCFM (2,832 SLPM)
9258	ETC - Electronic Temperature Control, 120V, 50/60 Hz, 1/2 NPT	9058	NEMA 4-4X Solenoid Valve Only, 24VDC, 1/2 NPT, 100 SCFM (2,832 SLPM)
9259	ETC - Electronic Temperature Control, 240V, 50/60 Hz, 1/2 NPT		
9015	Valve and Thermostat Kit, 120V, 50/60 Hz		

EXAIR's Side Mount Kits for NEMA 12, 4 and 4X Cabinet Coolers offer convenient mounting to the side of an electrical enclosure.



Side Mount Kits

EXAIR's Side Mount Kits make mounting on the side of an electrical enclosure possible when there is limited space on the top or side. (NEMA 4 and 4X Cabinet Cooler Systems must be mounted vertically.) The Side Mount Kits maintain the NEMA rating of large and small NEMA Type 12, 4 and 4X enclosures. They mount in a standard electrical knockout (1-1/2 NPS). Side Mount Kits for NEMA 12 Cabinet Cooler Systems have an aluminum construction. Those for NEMA 4 and 4X Cabinet Cooler Systems are Type 303 or Type 316 stainless steel.

Accessories and Components	
Model #	Description
4909	Side Mount Kit for NEMA 12 Cabinet Coolers up to 550 Btu/hr. (162 Watts)
4910	Side Mount Kit for NEMA 12 Cabinet Coolers, 650 Btu/hr. (192 Watts) and higher
4906	Side Mount Kit for NEMA 4 and 4X Cabinet Coolers up to 550 Btu/hr. (162 Watts)
4907	Side Mount Kit for NEMA 4 and 4X Cabinet Coolers, 650 Btu/hr. (192 Watts) and higher
4906-316	Type 316 Stainless Steel Side Mount Kit for NEMA 4 and 4X Cabinet Coolers, up to 550 Btu/hr. (162 Watts)
4907-316	Type 316 Stainless Steel Side Mount Kit for NEMA 4 and 4X Cabinet Coolers, 650 Btu/hr. (192 Watts) and higher

Built to Last 5 yr. WARRANTY

See our Terms & Conditions page for complete details.

90 Degree Side Mount Kit Dimensions								
Model		A	B	C	D	E	F	G
4906	in	2.50	2.50	1.50	3.50	3.03	1 NPS	1-1/2 NPS
	mm	64	64	38	89	77		
4907	in	2.50	2.50	1.50	3.50	3.03	1-1/2 NPS	1-1/2 NPS
	mm	64	64	38	89	77		
4909	in	2.50	2.50	1.50	2.19	1.73	1/2 NPS	1-1/2 NPS
	mm	64	64	38	56	44		
4910	in	2.50	2.50	1.50	2.19	1.73	3/4 NPS	1-1/2 NPS
	mm	64	64	38	56	44		

Side Mount Kit Dimensions

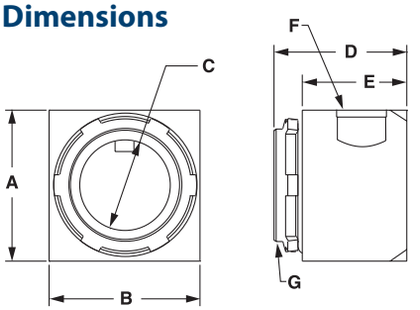

EXAIR_Cat36_25_FROMINDESIGN.indb 229 12/20/24 3:48 PM

Hazardous Location Cabinet Cooler® Systems



For use with classified enclosure purge and pressurization systems

- Class I Div 1, Groups A, B, C and D
- Class II Div 1, Groups E, F and G
- Class III

HazLoc Cabinet Coolers maintain NEMA 4/4X integrity and are CE compliant!

What is an EXAIR HazLoc Cabinet Cooler System?

These Cabinet Cooler Systems are engineered and approved for use upon purged electrical enclosures (not included) found within classified areas. The areas approved are Class I Div 1, Groups A, B, C and D – Class II Div 1 Groups E, F and G - and Class III. EXAIR's HazLoc Cabinet Cooler Systems have been tested by UL and meet the stringent UL requirements for these areas. Cabinet Cooler systems are a low cost and reliable way to cool purged electric control panels found within these environments. They utilize vortex tube technology to produce up to 5,600 Btu/Hr, with no moving parts, which additionally creates a low maintenance solution for cooling your HazLoc purged cabinets.

Advantages

- Rated for Div I Hazardous Locations
- UL Classified
- Available in 8 different cooling capacities
- No moving parts, low maintenance
- Thermostat control reduces operating cost
- Large range of cooling capacities up to 5,600 Btu/Hr
- 5 Year warranty
- Low cost

Why EXAIR HazLoc Cabinet Cooler Systems?

EXAIR's HazLoc Cabinet Cooler Systems have been set apart from the competition by achieving the UL classified designation for Div I environments. Thermostatically controlled systems are recommended for the highest efficiency and include UL listed solenoids, also for hazardous environments. EXAIR Cabinet Cooler systems will install on your purged enclosure in minutes, require little to no maintenance and operate under the toughest of industrial conditions. If you require low cost, ease of use and/or reliability – a HazLoc Cabinet Cooler system will meet your needs.

EXAIR Hazardous Location Cabinet Cooler Systems are available in 8 different cooling capacities from 1,000 Btu/Hr. to 5,600 Btu/Hr. This range of cooling allows for choosing the best fit for your cooling needs without wasting compressed air.

Cabinet Cooler Systems protect your electronics from heat, dirt and moisture and keep your processes running. They are the low-cost solution to messy, high maintenance coolant-based air conditioners with simple installation. With modern technology comes an increased number of small electronic components packed into smaller electronic cabinets. This creates a high internal heat load which increases failures due to heat. Components will fail, sensors will misread, controls can drift and displays become inaccurate. EXAIR HazLoc Cabinet Coolers can solve these problems and prevent lost productivity, shutdown and the expense of new components.

EXAIR_Cat36_25_FROMINDESIGN.indb 230 12/20/24 3:48 PM

Thermostat Control

Each EXAIR HazLoc Cabinet Cooler System is available with a thermostat control or as a continuous operation system. Each of these systems will include a water-dirt filter separator to prevent water condensate and dirt from entering your enclosure and a cold air distribution kit used to direct the air for circulation or onto hot spots.

HazLoc Cabinet Cooler Systems are also available in Type 316SS for highly corrosive environments.

Any control systems and accessories not rated for the hazardous location need to be moved outside of the hazardous area or inside a properly purged and pressurized enclosure which is suitable for the hazardous area.

Safety

EXAIR's HazLoc Cabinet Cooler Systems are not purged and pressurized control systems and should not be relied upon nor used in place of a purged and pressurized controller. They are meant for use in conjunction with a purged and pressurized control system.

Model #'s NEMA 4	Model #'s NEMA 4X
HZ4615	HZ4615SS
HZ4625	HZ4625SS
HZ4630	HZ4630SS
HZ4640	HZ4640SS
HZ4715	HZ4715SS
HZ4725	HZ4725SS
HZ4730	HZ4730SS
HZ4740	HZ4740SS
HZ4815	HZ4815SS
HZ4825	HZ4825SS
HZ4830	HZ4830SS
HZ4840	HZ4840SS

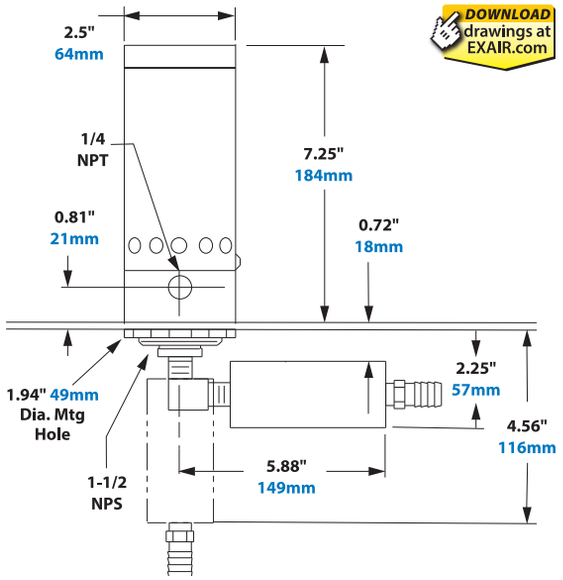

NEMA 4 (IP66) Hazardous Location Cabinet Cooler Systems

Cabinet Cooler Only Model #	Continuous Operation Model #	120V Thermostat Control Model #	240V Thermostat Control Model #	24VDC Thermostat Control Model #	Capacity*		Sound level dBA
					Btu/Hr	Watts	
HZ4615	HZ4715	HZ4815	HZ4815-240	HZ4815-24VDC	1,000	293	73
HZ4625	HZ4725	HZ4825	HZ4825-240	HZ4825-24VDC	1,700	498	80
HZ4630	HZ4730	HZ4830	HZ4830-240	HZ4830-24VDC	2,000	586	80
HZ4640	HZ4740	HZ4840	HZ4840-240	HZ4840-24VDC	2,800	821	82
N/A	HZ4750	HZ4850	HZ4850-240	HZ4850-24VDC	3,400	997	84
N/A	HZ4760	HZ4860	HZ4860-240	HZ4860-24VDC	4,000	1,171	84
N/A	HZ4770	HZ4870	HZ4870-240	HZ4870-24VDC	4,800	1,406	84
N/A	HZ4780	HZ4880	HZ4880-240	HZ4880-24VDC	5,600	1,641	85

NEMA 4X Hazardous Location Cabinet Cooler Systems

Cabinet Cooler Only Model #	Continuous Operation Model #	120V Thermostat Control Model #	240V Thermostat Control Model #	24VDC Thermostat Control Model #	Capacity*		Sound level dBA
					Btu/Hr	Watts	
HZ4615SS	HZ4715SS	HZ4815SS	HZ4815SS-240	HZ4815SS-24VDC	1,000	293	73
HZ4625SS	HZ4725SS	HZ4825SS	HZ4825SS-240	HZ4825SS-24VDC	1,700	498	80
HZ4630SS	HZ4730SS	HZ4830SS	HZ4830SS-240	HZ4830SS-24VDC	2,000	586	80
HZ4640SS	HZ4740SS	HZ4840SS	HZ4840SS-240	HZ4840SS-24VDC	2,800	821	82
N/A	HZ4750SS	HZ4850SS	HZ4850SS-240	HZ4850SS-24VDC	3,400	997	84
N/A	HZ4760SS	HZ4860SS	HZ4860SS-240	HZ4860SS-24VDC	4,000	1,171	84
N/A	HZ4770SS	HZ4870SS	HZ4870SS-240	HZ4870SS-24VDC	4,800	1,406	84
N/A	HZ4780SS	HZ4880SS	HZ4880SS-240	HZ4880SS-24VDC	5,600	1,641	85

*Cooling capacity at 100 PSIG (6.9 BAR) supply pressure.

Accessories and Components	
Model #	Description
902019	Hazloc Solenoid NEMA Type 4X/7/9, 1/4 NPT, 120V/60HZ
902020	Hazloc Solenoid NEMA Type 4X/7/9, 1/4 NPT, 240V/60HZ
902021	Hazloc Solenoid NEMA Type 4X/7/9, 1/4 NPT, 24VDC
9017	Thermostat only 24V-240V, 50/60 Hz
9004	Automatic Drain Filter Separator, 1/4 NPT, 43 SCFM (1,359 SLPM)
9027	Oil Removal Filter for all HazLoc Systems, 7-24 SCFM (198-680 SLPM), 1/4 NPT
9005	Oil Removal Filter for all HazLoc Systems, 15-37 SCFM (425-1,048 SLPM), 3/8 NPT
9006	Oil Removal Filter for all HazLoc Systems, 50-150 SCFM (1,416-4,248 SLPM), 3/4 NPT

EXAIR_Cat36_25_FROMINDESIGN.indb 231 12/20/24 3:48 PM

ATEX Cabinet Cooler® Systems

For use with classified enclosure purge and pressurization systems

Zones 2 and 22

- II 3 G Ex h IIC T3 Gc
- II 3 D Ex h IIIC T200°C Dc

Processing Breakthrough Products Awards 2024

NED Innovation Awards – New Equipment Digest – Process Equipment

Built to Last 5 yr. Warranty – See our Terms & Conditions page for complete details.

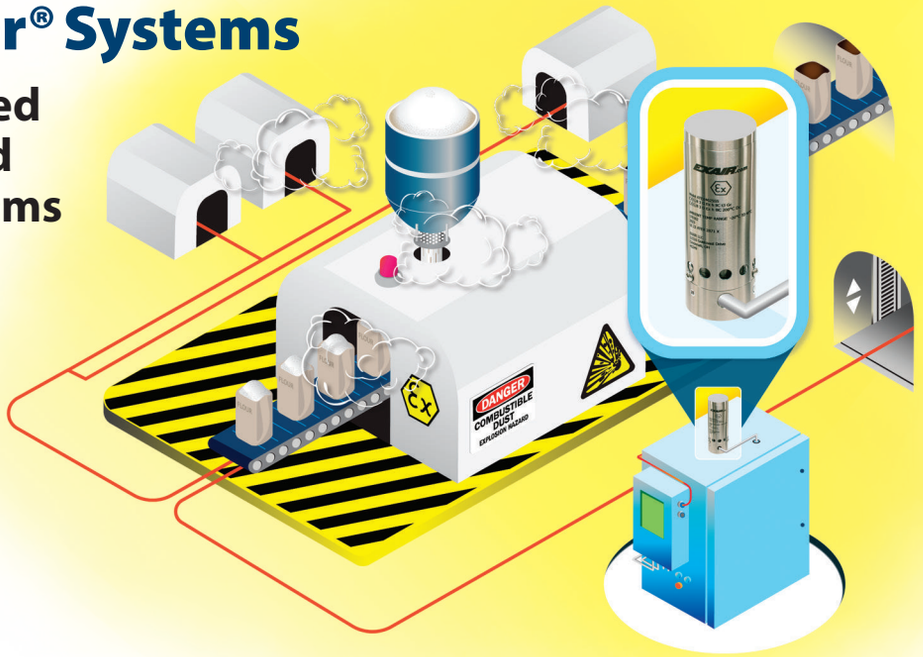

What is an ATEX Cabinet Cooler System?

ATEX Cabinet Cooler Systems are engineered and approved for use upon purged electrical enclosures (not included) found within ATEX zoned areas. The areas approved are Zone 2 and 22. EXAIR's ATEX Cabinet Cooler Systems have been tested by UL and meet the stringent ATEX requirements for these areas. Cabinet Cooler systems are a low cost and reliable way to cool purged electric control panels found within these environments. They utilize vortex tube technology to produce up to 5,600 Btu/Hr, with no moving parts, which additionally creates a low maintenance solution for cooling your ATEX purged cabinets.

The compact Cabinet Cooler is an easy-to-use air conditioner that can be installed in minutes through a standard electrical knockout. Aluminum and Stainless Steel ATEX Cabinet Coolers that match the NEMA rating of the enclosure are available in many cooling capacities for large and small control panels.

Advantages

- Rated for Zones 2 and 22
- Available in 8 different cooling capacities
- No moving parts, low maintenance
- Thermostat control reduces operating cost
- Large range of cooling capacities up to 5,600 Btu/hr
- 5 Year warranty
- Low cost

Why EXAIR ATEX Cabinet Coolers?

EXAIR's ATEX Cabinet Cooler Systems have been set apart from the competition by being certified for Zone 2 and 22 environments. Thermostatically controlled systems are recommended for the highest efficiency and include ATEX approved solenoids, also for hazardous environments. EXAIR Cabinet Cooler Systems will install upon your purged enclosure in minutes, require little to no maintenance and operate under the toughest of industrial conditions. If you require low cost, ease of use and/or reliability – an ATEX Cabinet Cooler System will meet your needs.

EXAIR ATEX Cabinet Cooler Systems are available in 8 different cooling capacities from 1,000 Btu/hr. to 5,600 Btu/hr. This range of cooling allows for choosing the best fit for your cooling needs without wasting compressed air.

Cabinet Cooler Systems protect your electronics from heat, dirt and moisture and keep your processes running. They are the low-cost solution to messy, high maintenance coolant-based air conditioners with simple installation. With modern technology comes an increased number of small electronic components packed into smaller electronic cabinets. This creates a high internal heat load which increases failures due to heat. Components will fail, sensors will misread, controls can drift and displays become inaccurate. EXAIR ATEX Cabinet Coolers can solve these problems and prevent lost productivity, shutdown and the expense of new components.

Thermostat Control

Each EXAIR ATEX Cabinet Cooler System is available with a thermostat control or as a continuous operation system. Each of these systems will include a water-dirt filter separator to prevent water condensate and dirt from entering your enclosure and cold air distribution kit used to direct the air for circulation and onto hot spots. ATEX Cabinet Cooler Systems are also available in Type 303 and Type 316SS for highly corrosive environments.

Any control systems and accessories not rated for the ATEX zone need to be moved outside of the ATEX zone or inside a properly purged and pressurized enclosure which is suitable for the ATEX zone.

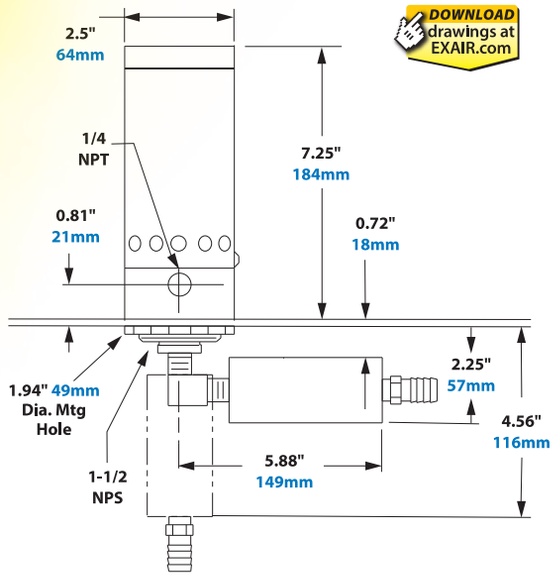

Safety

EXAIR's ATEX Cabinet Cooler Systems are not purged and pressurized control systems and should not be relied upon nor used in place of a purged and pressurized controller. They are meant for use in conjunction with a purged and pressurized control system.

Model #'s Aluminum	
ATEX4615	ATEX4730
ATEX4625	ATEX4740
ATEX4630	ATEX4815
ATEX4640	ATEX4825
ATEX4715	ATEX4830
ATEX4725	ATEX4840

Model #'s St. Steel	
ATEX4615SS	ATEX4730SS
ATEX4625SS	ATEX4740SS
ATEX4630SS	ATEX4815SS
ATEX4640SS	ATEX4825SS
ATEX4715SS	ATEX4830SS
ATEX4725SS	ATEX4840SS



EXAIR ATEX Cabinet Coolers are suitable for explosive and harsh environments.

Aluminum ATEX Cabinet Cooler Systems (maintain NEMA 4 integrity)

Cabinet Cooler Only Model #	Continuous Operation Model #	120V Thermostat Control Model #	240V Thermostat Control Model #	24VDC Thermostat Control Model #	Capacity*		Sound level dBA
					Btu/Hr	Watts	
ATEX4615	ATEX4715	ATEX4815	ATEX4815-240	ATEX4815-24VDC	1,000	293	73
ATEX4625	ATEX4725	ATEX4825	ATEX4825-240	ATEX4825-24VDC	1,700	498	80
ATEX4630	ATEX4730	ATEX4830	ATEX4830-240	ATEX4830-24VDC	2,000	586	80
ATEX4640	ATEX4740	ATEX4840	ATEX4840-240	ATEX4840-24VDC	2,800	821	82
N/A	ATEX4750	ATEX4850	ATEX4850-240	ATEX4850-24VDC	3,400	997	84
N/A	ATEX4770	ATEX4860	ATEX4860-240	ATEX4860-24VDC	4,000	1,171	84
N/A	ATEX4770	ATEX4870	ATEX4870-240	ATEX4870-24VDC	4,800	1,406	84
N/A	ATEX4780	ATEX4880	ATEX4880-240	ATEX4880-24VDC	5,600	1,641	85

Stainless Steel ATEX Cabinet Cooler Systems (maintain NEMA 4X integrity)

Cabinet Cooler Only Model #	Continuous Operation Model #	120V Thermostat Control Model #	240V Thermostat Control Model #	24VDC Thermostat Control Model #	Capacity*		Sound level dBA
					Btu/Hr	Watts	
ATEX4615SS	ATEX4715SS	ATEX4815SS	ATEX4815SS-240	ATEX4815SS-24VDC	1,000	293	73
ATEX4625SS	ATEX4725SS	ATEX4825SS	ATEX4825SS-240	ATEX4825SS-24VDC	1,700	498	80
ATEX4630SS	ATEX4730SS	ATEX4830SS	ATEX4830SS-240	ATEX4830SS-24VDC	2,000	586	80
ATEX4640SS	ATEX4740SS	ATEX4840SS	ATEX4840SS-240	ATEX4840SS-24VDC	2,800	821	82
N/A	ATEX4750SS	ATEX4850SS	ATEX4850SS-240	ATEX4850SS-24VDC	3,400	997	84
N/A	ATEX4760SS	ATEX4860SS	ATEX4860SS-240	ATEX4860SS-24VDC	4,000	1,171	84
N/A	ATEX4770SS	ATEX4870SS	ATEX4870SS-240	ATEX4870SS-24VDC	4,800	1,406	84
N/A	ATEX4780SS	ATEX4880SS	ATEX4880SS-240	ATEX4880SS-24VDC	5,600	1,641	85

*Cooling capacity at 100 PSIG (6.9 BAR) supply pressure.

Accessories and Components	
Model #	Description
902380	ATEX Solenoid, IP65, 1/4 NPT, 120V/60HZ
902381	ATEX Solenoid, IP65, 1/4 NPT, 240V/60HZ
902382	ATEX Solenoid, IP65, 1/4 NPT, 24VDC
9017	Thermostat only 24V-240V, 50/60 Hz
9001	Automatic Drain Filter Separator, 3/8 NPT, 65 SCFM (1,841 SLPM)
9004	Automatic Drain Filter Separator, 1/4 NPT, 43 SCFM (1,359 SLPM)
9032	Automatic Drain Filter Separator, 1/2 NPT, 90 SCFM (2,549 SLPM)
9027	Oil Removal Filter for all ATEX Systems, 7-24 SCFM (198-680 SLPM), 1/4 NPT
9005	Oil Removal Filter for all ATEX Systems, 15-37 SCFM (425-1,048 SLPM), 3/8 NPT
9006	Oil Removal Filter for all ATEX Systems, 50-150 SCFM (1,416-4,248 SLPM), 3/4 NPT

Accessories

Filter Separators

Model 9003

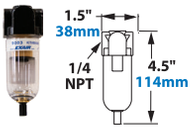

Model 9004



Model 9001 & 9032



Model 9002



Model 9066

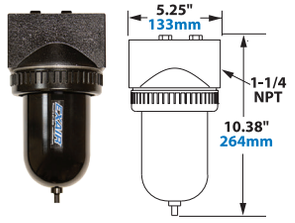

EXAIR's Filter Separators remove water, dirt and rust from your compressed air system. They prevent these contaminants from plugging or damaging the compressed air products. A Filter Separator should be installed prior to an Oil Removal Filter, pressure regulator or valve.

Model #	Description	Max Pres.	Max Temp.
9003	Manual Drain Filter Separator, 1/4 NPT, 27 SCFM (765 SLPM)	150 PSIG	125°F (52°C)
9004	Automatic Drain Filter Separator, 1/4 NPT, 43 SCFM (1,218 SLPM)	150 PSIG	125°F (52°C)
9001	Automatic Drain Filter Separator, 3/8 NPT, 65 SCFM (1,841 SLPM)	175 PSIG	120°F (49°C)
9032	Automatic Drain Filter Separator, 1/2 NPT, 90 SCFM (2,549 SLPM)	175 PSIG	120°F (49°C)
9002	Automatic Drain Filter Separator, 3/4 NPT, 220 SCFM (6,230 SLPM)	175 PSIG	120°F (49°C)
9066	Automatic Drain Filter Separator, 1-1/4 NPT, 400 SCFM (11,327 SLPM)	175 PSIG	120°F (49°C)

The Model 9003 Manual Drain Filter has a polycarbonate bowl and a 20 micron filter element. A manual drain is used to empty the filter. Model 9001, 9002, 9004, 9032, and 9066 Automatic Drain Filter Separators have a metal bowl and a 5 micron filter element (Model 9004 has a polycarbonate bowl with a metal guard). An internal float automatically activates the drain to remove liquid condensate when the bowl becomes full.

Oil Removal Filters

Model 9027



Model 9005



Model 9006

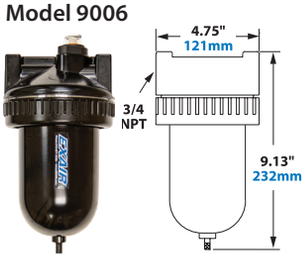

Model 9010

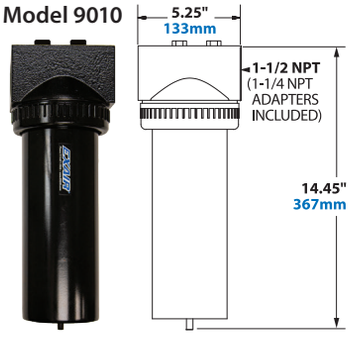

EXAIR's Model 9027, 9005, 9006, and 9010 Oil Removal Filters remove oil and solid particulate that is typical in many compressed air systems.

A 0.03 micron element is used to trap submicron particles. An internal float automatically activates the drain when full.

Model #	Description	Max Pres.	Max Temp.
9027	Oil Removal Filter, 1/4 NPT, 24 SCFM (680 SLPM)	175 PSIG	120°F (49°C)
9005	Oil Removal Filter, 3/8 NPT, 15-37 SCFM (425-1,048 SLPM)	175 PSIG	120°F (49°C)
9006	Oil Removal Filter, 3/4 NPT, 50-150 SCFM (1,416-4,248 SLPM)	175 PSIG	120°F (49°C)
9010	Oil Removal Filter, 1-1/2 NPT, 130-310 SCFM (3,679-8,773 SLPM)	175 PSIG	120°F (49°C)

Filter Mounting Brackets

Model 900395

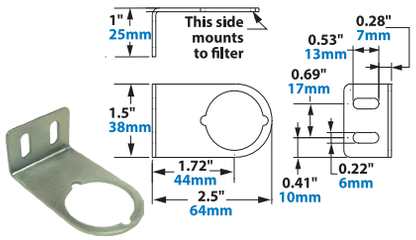

Model 900396

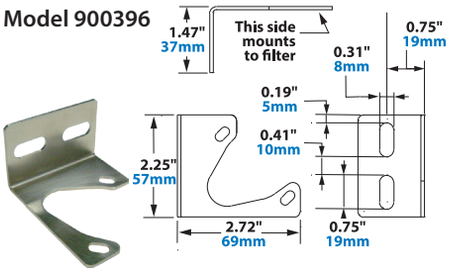

Model 900397

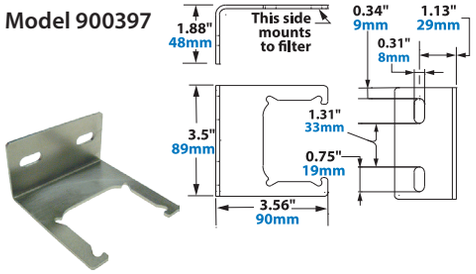

Model #	Description
900395	Mounting Bracket for Model 9003
900396	Mounting Bracket for Model 9001, 9004, 9005, 9027, and 9032
900397	Mounting Bracket for Model 9002

Pressure Regulators

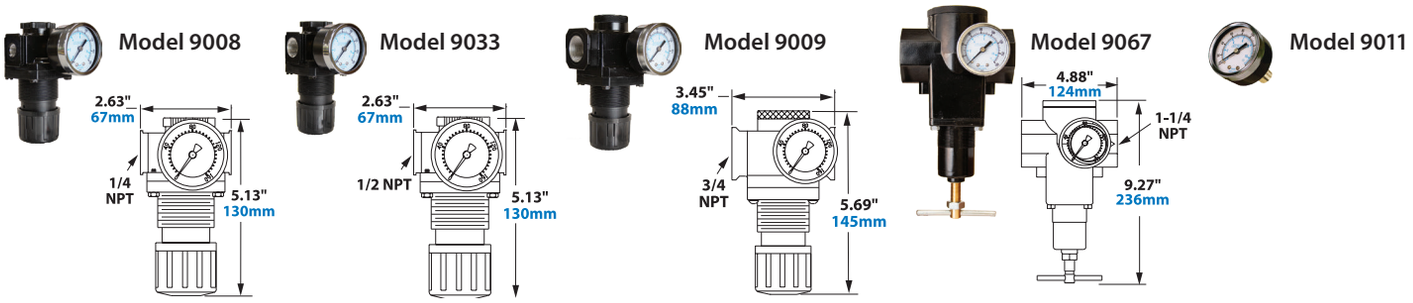

EXAIR's Model 9008, 9033, 9009 and 9067 Pressure Regulators permit easy selection of the operating pressure. A pressure gauge is included.

Model #	Description	Max Pres.	Max Temp.
9008	Pressure Regulator with Gauge, 1/4 NPT, 50 SCFM (1,416 SLPM)	250 PSIG	120°F (49°C)
9033	Pressure Regulator with Gauge, 1/2 NPT, 100 SCFM (2,832 SLPM)	250 PSIG	120°F (49°C)
9009	Pressure Regulator with Gauge, 3/4 NPT, 220 SCFM (6,230 SLPM)	250 PSIG	120°F (49°C)
9067	Pressure Regulator with Gauge, 1-1/4 NPT, 700 SCFM (19,822 SLPM)	250 PSIG	120°F (49°C)
9011	Pressure Gauge Only, 1/4 NPT, 0-160 PSI (0-11 BAR)	250 PSIG	120°F (49°C)

Pressure Regulator Mtg Brackets

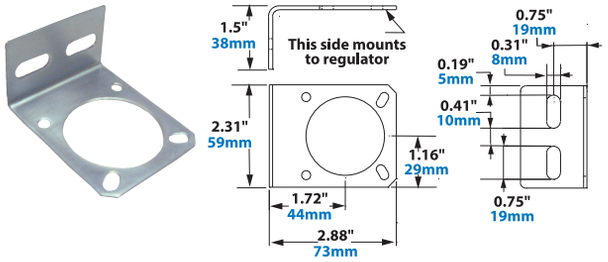

This optional mounting bracket fits Models 9008, 9033 and 9009 Pressure Regulators and includes a locking ring.

Model #	Description
900398	Mounting Bracket for Model 9008, 9033 and 9009

Mounting and Coupling Kits

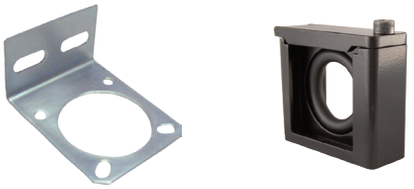

Model #	Description
9046	Mounting and Coupling Kit for Model 9001 Filter/Model 9008 Regulator and Model 9032 Filter/ Model 9033 Regulator
9047	Mounting and Coupling Kit for Model 9002 Filter/Model 9009 Regulator
9048	Mounting and Coupling Kit for Model 9004 Filter/Model 9005 Oil Removal Filter

Coupling Kits

EXAIR's Coupling Kits are interlocking slides that couple the modular filters and pressure regulators together.

Model #	Description
900394	Fits auto drain filters and regulators with 1/4 NPT, 3/8 NPT and 1/2 NPT threads
900552	Fits auto drain filters and regulators with 3/4 NPT threads

Model 900394

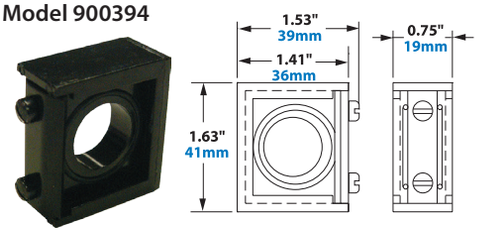

Model 900552

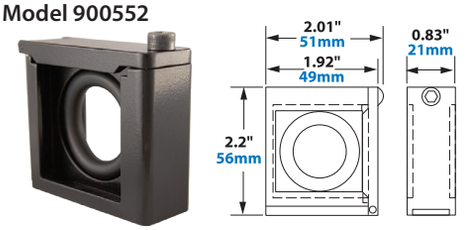

Silencing Mufflers

EXAIR Silencing Mufflers help to reduce work area noise produced by air exhausting from cylinders, valves and other air powered equipment. Per OSHA Standard 1910.95(a), a worker must not be exposed to sound levels above 90 dBA for any eight hour shift of a 40 hour work week. Silencing Mufflers help plants meet this OSHA requirement by reducing the sound to safe levels below 90 dBA. They also eliminate harmful dead end pressures. Each style of Silencing Muffler shown has a high airflow capacity, with low back pressure. Popular NPT sizes are ideal for new and existing installations.

Reclassifying Mufflers

Reclassifying Mufflers are an upgrade from Sintered Bronze Mufflers (*see next page*). They offer the best noise reduction - up to 35 dB. Available from 1/8 NPT through 1 NPT, Reclassifying Mufflers eliminate oil mist. Exhaust air from cylinders and valves often contain oil mists that can contaminate the workers' breathing air, affecting their health. Per OSHA Standard 29 CFR 1910.1000, a worker's cumulative exposure to oil mist must not exceed 5mg/m³ by volume in any eight hour shift of a 40 hour work week.



The patented wrap design of the removable element separates oil from the exhausted air so virtually no oil is released into the environment. Based on an intake of 50 PPM at 100 PSIG, the Reclassifying Mufflers reclassify and reduce the exhausted oil mist to 0.015 PPM. A reservoir where oil accumulates at the bottom can be drained by attaching a 1/4" tube.

Each Reclassifying Muffler passes a certain volume of air with minimal back pressure restriction so it doesn't interfere with the operation of the cylinder or valve. When used with cylinders, the "Muffler Quick Pick" table (*right*) helps you select the appropriate model based on the actual bore and stroke of the cylinder.





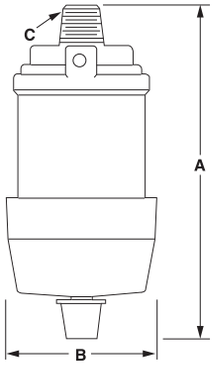

Muffler Quick Pick

Model 9070
Model 9071
Model 9072
Model 9073
Model 9074
Model 9075
Contact an Application Engineer for more information.

Muffler Needed To Exhaust In 1/2 Second For A Cylinder Charged To 100 PSIG

Bore (in.)	Stroke (in.) 3	6	9	12	18	24	30	36	42	48
0.5										
1.0										
1.5										
2.0										
2.5										
3.0										
3.5										
4.0										
4.5										
5.0										
5.5										
6.0										

Model #	Description		A	B	C	Replacement Element #
9070	Reclassifying Muffler	in	3.13	1.63	1/8 NPT	900553
		mm	80	41		
9071	Reclassifying Muffler	in	3.13	1.63	1/4 NPT	
		mm	80	41		
9072	Reclassifying Muffler	in	4.75	2.44	3/8 NPT	900554
		mm	121	62		
9073	Reclassifying Muffler	in	4.75	2.44	1/2 NPT	
		mm	121	62		
9074	Reclassifying Muffler	in	6.25	3.31	3/4 NPT	900555
		mm	159	84		
9075	Reclassifying Muffler	in	6.25	3.31	1 NPT	
		mm	159	84		

Accessories

Solenoid Valves



Solenoid Valves are available in a variety of flow rates and voltages. All models are UL Listed and are CE and RoHS compliant.

Model #	Description
9020	Solenoid Valve, 120V, 50/60Hz, 1/4 NPT, 40 SCFM (1,133 SLPM)
9018	NEMA 4-4X Solenoid Valve, 120V, 50/60Hz, 1/4 NPT, 40 SCFM (1,133 SLPM)
9034	NEMA 4-4X Solenoid Valve, 120V, 50/60Hz, 1/2 NPT, 100 SCFM (2,832 SLPM)
9036	NEMA 4-4X Solenoid Valve, 120V, 50/60Hz, 3/4 NPT, 200 SCFM (5,664 SLPM)
9021	Solenoid Valve, 200-240V, 50/60Hz, 1/4 NPT, 40 SCFM (1,133 SLPM)
9024	NEMA 4-4X Solenoid Valve, 240V, 50/60Hz, 1/4 NPT, 40 SCFM (1,133 SLPM)
9035	NEMA 4-4X Solenoid Valve, 240V, 50/60Hz, 1/2 NPT, 100 SCFM (2,832 SLPM)
9037	NEMA 4-4X Solenoid Valve, 240V, 50/60Hz, 3/4 NPT, 200 SCFM (5,664 SLPM)
9031	NEMA 4-4X Solenoid Valve, 24VDC, 1/4 NPT, 40 SCFM (1,133 SLPM)
9058	NEMA 4-4X Solenoid Valve, 24VDC, 1/2 NPT, 100 SCFM (2,832 SLPM)
9059	NEMA 4-4X Solenoid Valve, 24VDC, 3/4 NPT, 200 SCFM (5,664 SLPM)
9065	NEMA 4-4X Solenoid Valve, 24VDC, 1 NPT, 350 SCFM (9,911 SLPM)

Valves



Model #	Description
9012	Manual Valve, 1/4 NPT
900340	Manual Valve, 3/8 NPT
900343	Manual Valve, 1/2 NPT
900743	Manual Valve, 3/4 NPT
900346	Manual Valve, 1 NPT
900744	Manual Valve, 1-1/4 NPT

Swivel Fittings



EXAIR's Swivel Fittings make it easy to adjust the position of the Air Nozzles, Air Jets, and Air Amplifiers. Swivel Fittings permit a movement of 25 degrees from the center axis for a total movement of 50 degrees. Type 303 and 316 stainless steel.

Model #	Description
9201	M4 x 0.5mm female x 1/8 MNPT Swivel Fitting, 316 SS
9202	M5 x 0.5mm female x 1/8 MNPT Swivel Fitting, 316 SS
9203	M6 x 0.75mm female x 1/8 MNPT Swivel Fitting, 316 SS
9052	1/8 NPT Swivel Fitting, 303 SS
9053	1/4 NPT Swivel Fitting, 303 SS
9068	3/8 NPT Swivel Fitting, 303 SS
9069	1/2 NPT Swivel Fitting, 303 SS
9023	3/4 NPT Swivel Fitting, 303 SS
9204	1 MNPT x 1 FNPT, 303 SS

ETC™ Electronic Temperature Control



Model	Voltage	Flow
9238	120VAC 50/60HZ	1/4 NPT 40 SCFM (1,133 SLPM)
9258	120VAC 50/60Hz	1/2 NPT 100 SCFM (2,832 SLPM)
9239	240VAC 50/60Hz	1/4 NPT 40 SCFM (1,133 SLPM)
9259	240VAC 50/60Hz	1/2 NPT 100 SCFM (2,832 SLPM)

ETC enclosure: Polycarbonate NEMA 4X, IP 66, UL508, UL94-5V
CE and ROHS Compliant

For more about the ETC, see page 221 of this catalog.

EXAIR's digital ETC™ (Electronic Temperature Control) provides precise temperature control for your electrical enclosure. The LED readout of the ETC displays the internal temperature of the electrical enclosure (°F or °C) that is constantly being monitored by a quick response thermocouple.

Thermostat

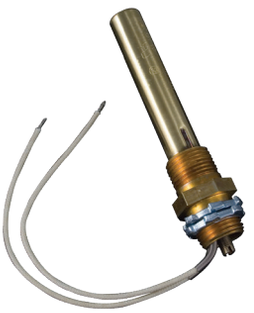

The adjustable thermostat is factory set at 95°F (35°C). It will normally hold ±2°F (1°C) of the desired temperature setting. It is rated 24V-240V AC or DC, 50/60Hz and is UL Recognized, CSA Certified.

Model #	Description
9017	Thermostat

EXAIR_Cat36_25_FROMINDESIGN.indb 238 12/20/24 3:48 PM

Magnetic Bases

Model 9042 Model 9043 Model 9029



Magnetic bases are suited to applications where frequent movement of the air product is required. The powerful magnet permits horizontal or vertical mounting. A valve is provided that can be used to vary the force and flow.

Model #	Description
9042	One Outlet Magnetic Base with Shutoff Valve (1/4 NPT)
9043	Two Outlet Magnetic Base with Shutoff Valve (1/4 NPT)
9029	One Outlet Swivel Magnetic Base with Shutoff Valve (1/4 NPT)

Stay Set Hoses

For applications where frequent repositioning of the air product is required, the Flexible Stay Set Hoses™ are ideal. Simply mount the hose in close proximity to the application and bend it. Since the hose has "memory", it will not creep or bend. It will always keep the aim until physically moved to the next position and will withstand temperatures of up to 158°F (70°C).

(1/4 male NPT fitting on one end, 1/8 female NPT on the other)

Model #	Description
9256	6" (152mm) 1/4 MNPT × 1/8 FNPT
9262	12" (305mm) 1/4 MNPT × 1/8 FNPT
9268	18" (457mm) 1/4 MNPT × 1/8 FNPT
9274	24" (610mm) 1/4 MNPT × 1/8 FNPT
9280	30" (762mm) 1/4 MNPT × 1/8 FNPT
9286	36" (914mm) 1/4 MNPT × 1/8 FNPT

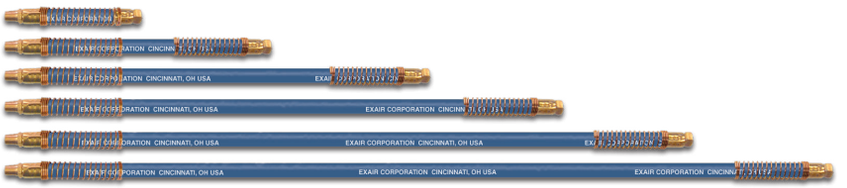

(1/4 male NPT fitting on each end)

Model #	Description
9206	6" (152mm) 1/4 MNPT × 1/4 MNPT
9212	12" (305mm) 1/4 MNPT × 1/4 MNPT
9218	18" (457mm) 1/4 MNPT × 1/4 MNPT
9224	24" (610mm) 1/4 MNPT × 1/4 MNPT
9230	30" (762mm) 1/4 MNPT × 1/4 MNPT
9236	36" (914mm) 1/4 MNPT × 1/4 MNPT

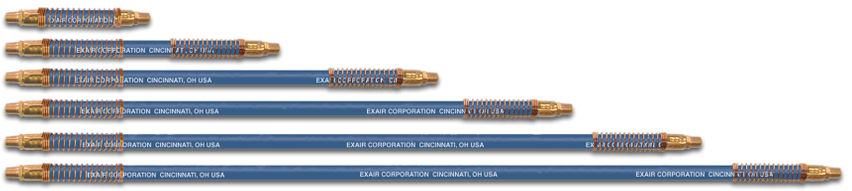

Hoses



12 Foot (3.66m) Coiled Hoses

Model #	Description	Model #	Description	Model #	Description
900106	1/8 NPT × 1/4" ID Coiled Hose With Swivel	900750	1/4 NPT × 3/8" ID Coiled Hose With Swivel	900751	3/8 NPT × 3/8" ID Coiled Hose With Swivel



Conveying Hose

Hose lengths are 10', 20', 30', 40' and 50'. Select the hose model number (diameter) and indicate the length with a dash. Example: A Model 6931-20 is 1" ID Hose × 20' long.

Model #	Description	Model #	Description	Model #	Description
6928-	Hose 3/8" ID	6931-	Hose 1" ID	6934-	Hose 2" ID
6929-	Hose 1/2" ID	6932-	Hose 1-1/4" ID	6935-	Hose 2-1/2" ID
6930-	Hose 3/4" ID	6933-	Hose 1-1/2" ID	6936-	Hose 3" ID



Compressed Air Hose

Compressed air hose is made of reinforced synthetic rubber to assure long life and protection against ozone, weathering, and temperatures up to 158°F (70°C). Hose lengths are 10', 15', 20', 30', 40' and 50'. Indicate the length with a dash. Example: A Model 900061-30 is 3/8" ID Hose × 30' long.

Model #	Description
900061	Compressed Air Hose, 1/4 MNPT × 1/4 MNPT (3/8" ID Hose)
901179	Compressed Air Hose, 1/2 MNPT × 1/2 MNPT (1/2" ID Hose)

Accessories

Compressed Air Fittings



Hex Nipple		
Model #	Material	Thread Size
9890	Brass	1/8 MNPT x 1/8 MNPT
9944	Brass	1/4 MNPT x 1/4 MNPT
9759	Brass	3/8 MNPT x 3/8 MNPT
9760	Brass	1/2 MNPT x 1/2 MNPT
9761	Brass	3/4 MNPT x 3/4 MNPT
9958	304SS	1/8 MNPT x 1/8 MNPT
9959	304SS	1/4 MNPT x 1/4 MNPT
9960	304SS	3/8 MNPT x 3/8 MNPT
9961	304SS	1/2 MNPT x 1/2 MNPT



Close Nipple		
Model #	Material	Thread Size
9551	Brass	1/4 MNPT x 1/4 MNPT
9752	Brass	3/8 MNPT x 3/8 MNPT
900745	Brass	1/2 MNPT x 1/2 MNPT
900559	Brass	3/4 MNPT x 3/4 MNPT
900309	NP Brass	1/8 MNPT x 1/8 MNPT
900084	NP Brass	1/4 MNPT x 1/4 MNPT
900435	NP Brass	3/8 MNPT x 3/8 MNPT
900436	NP Brass	1/2 MNPT x 1/2 MNPT
900409	316SS	1/8 MNPT x 1/8 MNPT
900160	316SS	1/4 MNPT x 1/4 MNPT
900505	316SS	3/8 MNPT x 3/8 MNPT
900506	316SS	1/2 MNPT x 1/2 MNPT



Coupler		
Model #	Material	Thread Size
900453	NP Brass	1/8 FNPT x 1/8 FNPT
9871	Brass	1/4 FNPT x 1/4 FNPT

MNPT = Male NPT
FNPT = Female NPT
NP = Nickel Plated
UNF = Unified Fine Thread



Reducer		
Model #	Material	Thread Size
900405	Brass	1/4 MNPT x 1/8 FNPT
900105	Brass	1/4 FNPT x 1/8 MNPT
9553	Brass	3/8 MNPT x 1/4 MNPT
9897	Brass	1/2 MNPT x 3/8 MNPT
900736	Brass	1/2 MNPT x 1/4 MNPT
900622	Brass	1/2 MNPT x 1/4 FNPT
901240	Brass	1/2 FNPT x 3/8 MNPT



Tee		
Model #	Material	Thread Size
900005	Brass	1/4 FNPT x 1/4 FNPT x 1/4 MNPT
9851	Brass	1/4 MNPT x 1/4 MNPT x 1/4 MNPT
9971	Brass	3/8 FNPT x 1/4 FNPT x 3/8 MNPT
9896	Brass	3/8 FNPT x 3/8 FNPT x 3/8 FNPT
900621	Brass	1/2 FNPT x 1/2 FNPT x 1/2 FNPT
900734	Brass	1/2 FNPT x 1/4 FNPT x 1/2 FNPT



Elbow		
Model #	Material	Thread Size
7674	Brass	1/8 MNPT x 1/8 FNPT 45˚
9555	Brass	1/4 MNPT x 1/4 FNPT 90˚
9895	Brass	3/8 MNPT x 3/8 FNPT 90˚
900073	Brass	1/4 MNPT x 3/8 Tube 90˚



Cross		
Model #	Material	Thread Size
900735	Brass	1/2 FNPT

60 Gallon Receiver Tank



Some applications require an intermittent demand for a high volume of compressed air. This can cause fluctuations in pressure and volume throughout the compressed air system with some points being "starved" for compressed air. EXAIR's Model 9500-60 60 Gallon Receiver Tank can be installed near the point of high demand so there is an additional supply of compressed air available for a short duration. The time between the high volume demand occurrences should be long enough so the compressor has enough time to replenish the EXAIR 60 Gallon Receiver Tank.

The 60 gallon (227 liter) vertical steel tank with mounting feet saves floor space and meets the American Society of Mechanical Engineers (ASME) pressure vessel code. (It is not ASME rated for vacuum.) A drain valve is provided for placement at the bottom of the tank to discharge liquid and contaminants.

A user supplied check valve installed upstream of the receiver tank will maintain the tank at maximum pressure so upstream uses of compressed air do not deplete the tank. A user supplied needle valve can regulate the refilling of the Receiver Tank, effectively reducing the large intermittent air requirement into a smaller average demand.

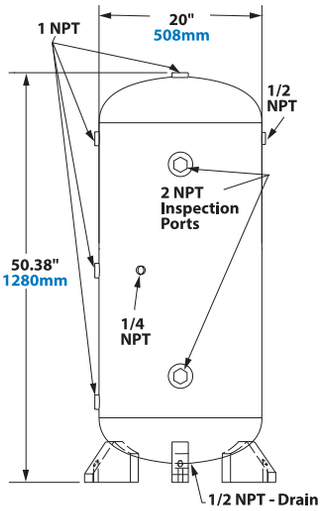

Receiver Tank	
Model #	Description
9500-60	60 Gallon Receiver Tank

- Pressure tank has a primer finish
- Temperature rating is -20° to 450°F (-29° to 232°C)
- Tank maximum pressure is 200 PSIG (13.8 BAR)
- No plugs are included for open ports. User must supply pressure rated plugs and pressure relief valve.
- Weight is 165 lbs. (75 kg)
- Please consult your local code requirements prior to installation.

Magnetic Bases

Model 9042 Model 9043 Model 9029



Magnetic bases are suited to applications where frequent movement of the air product is required. The powerful magnet permits horizontal or vertical mounting. A valve is provided that can be used to vary the force and flow.

Model #	Description
9042	One Outlet Magnetic Base with Shutoff Valve (1/4 NPT)
9043	Two Outlet Magnetic Base with Shutoff Valve (1/4 NPT)
9029	One Outlet Swivel Magnetic Base with Shutoff Valve (1/4 NPT)

Stay Set Hoses

For applications where frequent repositioning of the air product is required, the Flexible Stay Set Hoses™ are ideal. Simply mount the hose in close proximity to the application and bend it. Since the hose has "memory", it will not creep or bend. It will always keep the aim until physically moved to the next position and will withstand temperatures of up to 158°F (70°C).

(1/4 male NPT fitting on one end, 1/8 female NPT on the other)

Model #	Description
9256	6" (152mm) 1/4 MNPT × 1/8 FNPT
9262	12" (305mm) 1/4 MNPT × 1/8 FNPT
9268	18" (457mm) 1/4 MNPT × 1/8 FNPT
9274	24" (610mm) 1/4 MNPT × 1/8 FNPT
9280	30" (762mm) 1/4 MNPT × 1/8 FNPT
9286	36" (914mm) 1/4 MNPT × 1/8 FNPT



(1/4 male NPT fitting on each end)

Model #	Description
9206	6" (152mm) 1/4 MNPT × 1/4 MNPT
9212	12" (305mm) 1/4 MNPT × 1/4 MNPT
9218	18" (457mm) 1/4 MNPT × 1/4 MNPT
9224	24" (610mm) 1/4 MNPT × 1/4 MNPT
9230	30" (762mm) 1/4 MNPT × 1/4 MNPT
9236	36" (914mm) 1/4 MNPT × 1/4 MNPT



Hoses



12 Foot (3.66m) Coiled Hoses					
Model #	Description	Model #	Description	Model #	Description
900106	1/8 NPT × 1/4" ID Coiled Hose With Swivel	900750	1/4 NPT × 3/8" ID Coiled Hose With Swivel	900751	3/8 NPT × 3/8" ID Coiled Hose With Swivel



Conveying Hose

Hose lengths are 10', 20', 30', 40' and 50'. Select the hose model number (diameter) and indicate the length with a dash. Example: A Model 6931-20 is 1" ID Hose × 20' long.

Model #	Description	Model #	Description	Model #	Description
6928-	Hose 3/8" ID	6931-	Hose 1" ID	6934-	Hose 2" ID
6929-	Hose 1/2" ID	6932-	Hose 1-1/4" ID	6935-	Hose 2-1/2" ID
6930-	Hose 3/4" ID	6933-	Hose 1-1/2" ID	6936-	Hose 3" ID



Compressed Air Hose

Compressed air hose is made of reinforced synthetic rubber to assure long life and protection against ozone, weathering, and temperatures up to 158°F (70°C). Hose lengths are 10', 15', 20', 30', 40' and 50'. Indicate the length with a dash. Example: A Model 900061-30 is 3/8" ID Hose × 30' long.

Model #	Description
900061	Compressed Air Hose, 1/4 MNPT × 1/4 MNPT (3/8" ID Hose)
901179	Compressed Air Hose, 1/2 MNPT × 1/2 MNPT (1/2" ID Hose)

Accessories

Compressed Air Fittings





Hex Nipple		
Model #	Material	Thread Size
9890	Brass	1/8 MNPT x 1/8 MNPT
9944	Brass	1/4 MNPT x 1/4 MNPT
9759	Brass	3/8 MNPT x 3/8 MNPT
9760	Brass	1/2 MNPT x 1/2 MNPT
9761	Brass	3/4 MNPT x 3/4 MNPT
9958	304SS	1/8 MNPT x 1/8 MNPT
9959	304SS	1/4 MNPT x 1/4 MNPT
9960	304SS	3/8 MNPT x 3/8 MNPT
9961	304SS	1/2 MNPT x 1/2 MNPT





Close Nipple		
Model #	Material	Thread Size
9551	Brass	1/4 MNPT x 1/4 MNPT
9752	Brass	3/8 MNPT x 3/8 MNPT
900745	Brass	1/2 MNPT x 1/2 MNPT
900559	Brass	3/4 MNPT x 3/4 MNPT
900309	NP Brass	1/8 MNPT x 1/8 MNPT
900084	NP Brass	1/4 MNPT x 1/4 MNPT
900435	NP Brass	3/8 MNPT x 3/8 MNPT
900436	NP Brass	1/2 MNPT x 1/2 MNPT
900409	316SS	1/8 MNPT x 1/8 MNPT
900160	316SS	1/4 MNPT x 1/4 MNPT
900505	316SS	3/8 MNPT x 3/8 MNPT
900506	316SS	1/2 MNPT x 1/2 MNPT



Coupler		
Model #	Material	Thread Size
900453	NP Brass	1/8 FNPT x 1/8 FNPT
9871	Brass	1/4 FNPT x 1/4 FNPT

MNPT = Male NPT
FNPT = Female NPT
NP = Nickel Plated
UNF = Unified Fine Thread



Reducer		
Model #	Material	Thread Size
900405	Brass	1/4 MNPT x 1/8 FNPT
900105	Brass	1/4 FNPT x 1/8 MNPT
9553	Brass	3/8 MNPT x 1/4 MNPT
9897	Brass	1/2 MNPT x 3/8 MNPT
900736	Brass	1/2 MNPT x 1/4 MNPT
900622	Brass	1/2 MNPT x 1/4 FNPT
901240	Brass	1/2 FNPT x 3/8 MNPT



Tee		
Model #	Material	Thread Size
900005	Brass	1/4 FNPT x 1/4 FNPT x 1/4 MNPT
9851	Brass	1/4 MNPT x 1/4 MNPT x 1/4 MNPT
9971	Brass	3/8 FNPT x 1/4 FNPT x 3/8 MNPT
9896	Brass	3/8 FNPT x 3/8 FNPT x 3/8 FNPT
900621	Brass	1/2 FNPT x 1/2 FNPT x 1/2 FNPT
900734	Brass	1/2 FNPT x 1/4 FNPT x 1/2 FNPT



Elbow		
Model #	Material	Thread Size
7674	Brass	1/8 MNPT x 1/8 FNPT 45˚
9555	Brass	1/4 MNPT x 1/4 FNPT 90˚
9895	Brass	3/8 MNPT x 3/8 FNPT 90˚
900073	Brass	1/4 MNPT x 3/8 Tube 90˚



Cross		
Model #	Material	Thread Size
900735	Brass	1/2 FNPT

60 Gallon Receiver Tank



Some applications require an intermittent demand for a high volume of compressed air. This can cause fluctuations in pressure and volume throughout the compressed air system with some points being "starved" for compressed air. EXAIR's Model 9500-60 60 Gallon Receiver Tank can be installed near the point of high demand so there is an additional supply of compressed air available for a short duration. The time between the high volume demand occurrences should be long enough so the compressor has enough time to replenish the EXAIR 60 Gallon Receiver Tank.

The 60 gallon (227 liter) vertical steel tank with mounting feet saves floor space and meets the American Society of Mechanical Engineers (ASME) pressure vessel code. (It is not ASME rated for vacuum.) A drain valve is provided for placement at the bottom of the tank to discharge liquid and contaminants.

A user supplied check valve installed upstream of the receiver tank will maintain the tank at maximum pressure so upstream uses of compressed air do not deplete the tank. A user supplied needle valve can regulate the refilling of the Receiver Tank, effectively reducing the large intermittent air requirement into a smaller average demand.

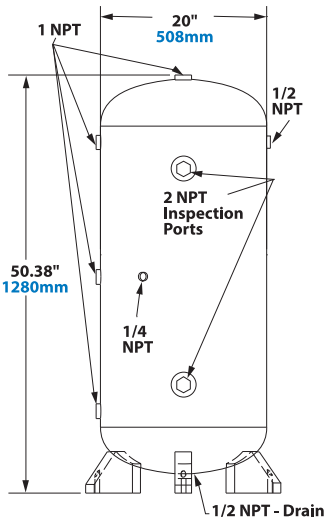

Receiver Tank	
Model #	Description
9500-60	60 Gallon Receiver Tank

- Pressure tank has a primer finish
- Temperature rating is -20° to 450°F (-29° to 232°C)
- Tank maximum pressure is 200 PSIG (13.8 BAR)
- No plugs are included for open ports. User must supply pressure rated plugs and pressure relief valve.
- Weight is 165 lbs. (75 kg)
- Please consult your local code requirements prior to installation.